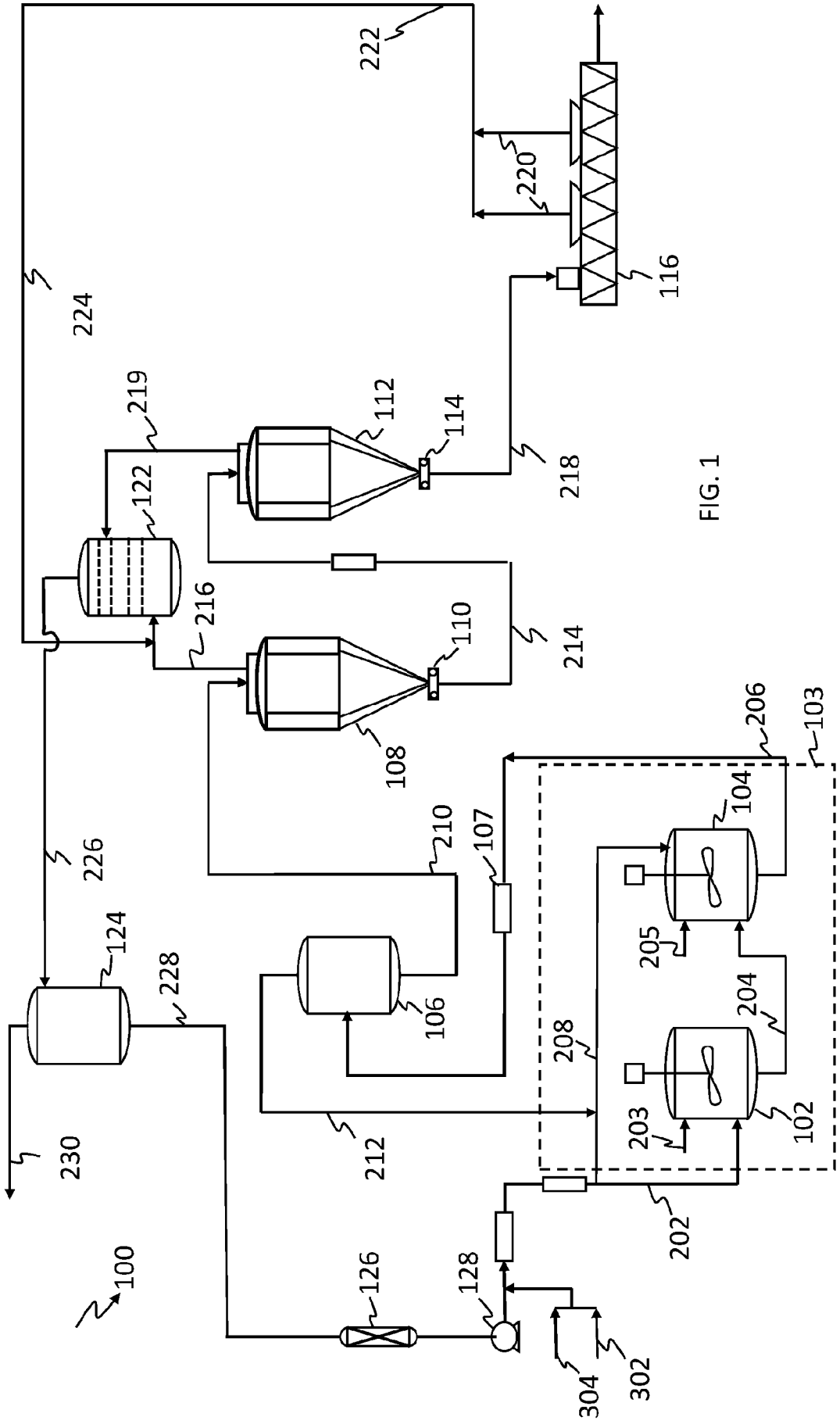
222
220
116
224
219
112
114
218
122
216
110
214
108
206
103
104
210
107
226
124
228
205
106
204
208
230
212
203
102
202
100
126
128
304
302

FIG. 1

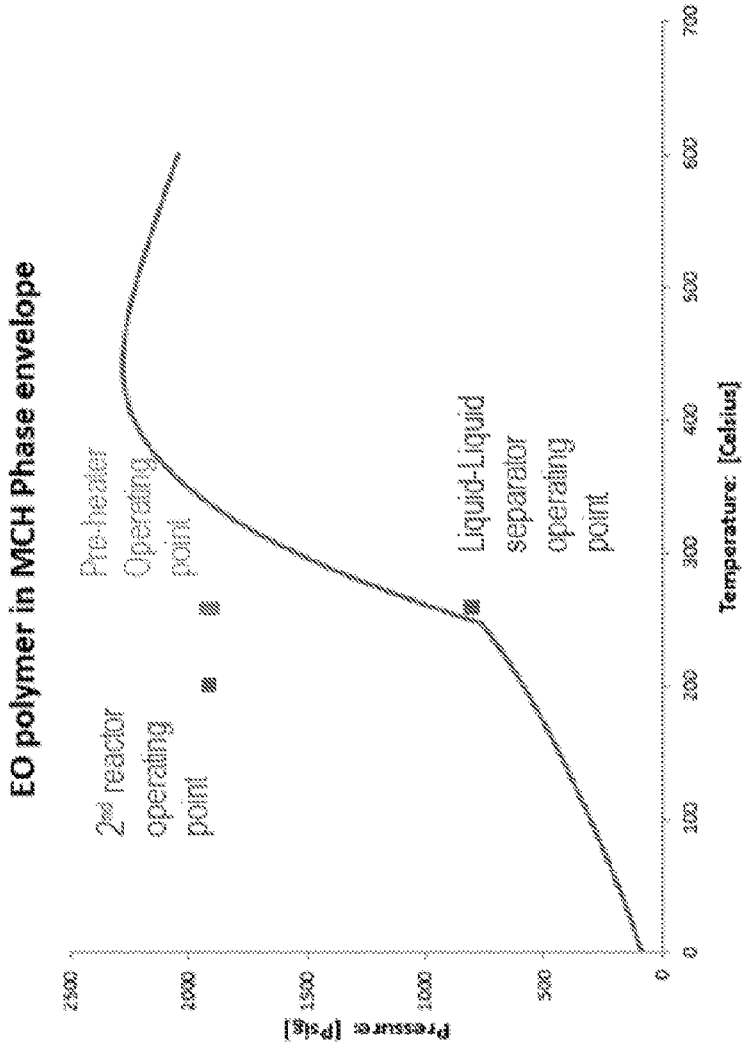
EO polymer in MCH Phase envelope
2nd reactor operating point
Pre-heater Operating point
Liquid-Liquid separator operating point
Pressure: [Psia]
Temperature: [Celsius]
2500
2000
1500
1000
500
0
100
200
300
400
500
600
700

FIG. 2