(12) INTERNATIONAL APPLICATION PUBLISHED UNDER THE PATENT COOPERATION TREATY (PCT)

(19) World Intellectual Property Organization
International Bureau

(43) International Publication Date
23 July 2009 (23.07.2009)

PCT

(10) International Publication Number
WO 2009/091484 A1

(51) International Patent Classification:
H01L 27/146 (2006.01)

(21) International Application Number:
PCT/US2008/088077

(22) International Filing Date:
22 December 2008 (22.12.2008)

(25) Filing Language: English

(26) Publication Language: English

(30) Priority Data:

61/009,454	28 December 2007 (28.12.2007)	US
61/062,773	28 January 2008 (28.01.2008)	US
61/063,301	1 February 2008 (01.02.2008)	US
61/069,344	14 March 2008 (14.03.2008)	US
12/218,749	16 July 2008 (16.07.2008)	US

(71) Applicants and
(72) Inventors: **TAY, Hiok-nam** [SG/US]; Blk. 409, Woodland St. 41, #13-109, 730409 (SG). **DO, Thanh-trung** [VN/SG]; 1 Lorong 2 Toa Payoh #05-02, 319637 (SG).

(74) Agent: **LAUB, Soyeon, Pak**; Mcdermott Will & Emery LLP, 18191 Von Karman Ave., Suite 500, Irvine, CA 92612 (US).

(81) Designated States *(unless otherwise indicated, for every kind of national protection available)*: AE, AG, AL, AM, AO, AT, AU, AZ, BA, BB, BG, BH, BR, BW, BY, BZ, CA, CH, CN, CO, CR, CU, CZ, DE, DK, DM, DO, DZ, EC, EE, EG, ES, FI, GB, GD, GE, GH, GM, GT, HN, HR, HU, ID, IL, IN, IS, JP, KE, KG, KM, KN, KP, KR, KZ, LA, LC, LK, LR, LS, LT, LU, LY, MA, MD, ME, MG, MK, MN, MW, MX, MY, MZ, NA, NG, NI, NO, NZ, OM, PG, PH, PL, PT, RO, RS, RU, SC, SD, SE, SG, SK, SL, SM, ST, SV, SY, TJ, TM, TN, TR, TT, TZ, UA, UG, US, UZ, VC, VN, ZA, ZM, ZW.

(84) Designated States *(unless otherwise indicated, for every kind of regional protection available)*: ARIPO (BW, GH, GM, KE, LS, MW, MZ, NA, SD, SL, SZ, TZ, UG, ZM, ZW), Eurasian (AM, AZ, BY, KG, KZ, MD, RU, TJ, TM), European (AT, BE, BG, CH, CY, CZ, DE, DK, EE, ES, FI, FR, GB, GR, HR, HU, IE, IS, IT, LT, LU, LV, MC, MT, NL,

[Continued on next page]

(54) **Title:** LIGHT GUIDE ARRAY FOR AN IMAGE SENSOR

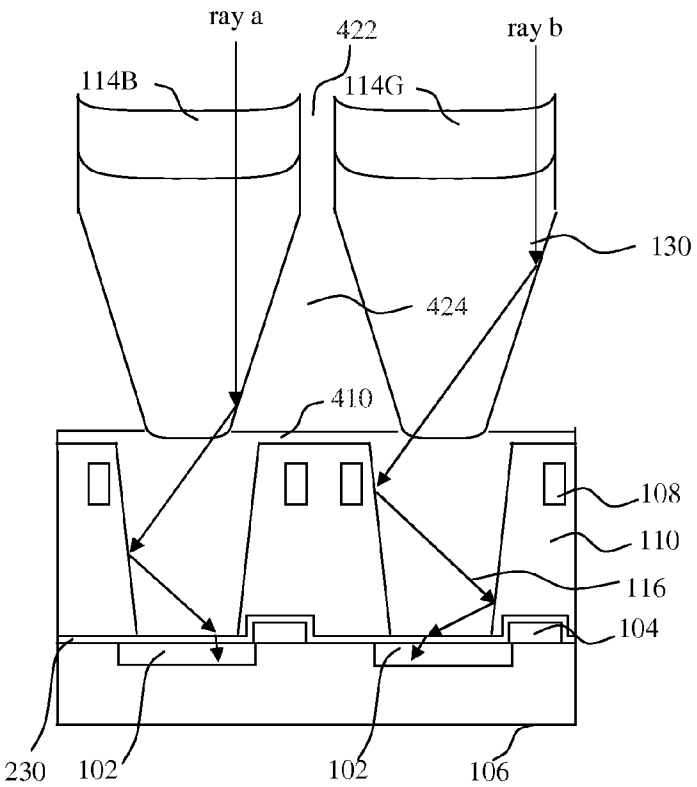

FIG. 5

(57) **Abstract:** An image sensor pixel that includes a photoelectric conversion unit (102) supported by a substrate (106) and an insulator (110) adjacent to the substrate. The pixel includes a cascaded light guide (116,130) that is located within an opening of the insulator and extends above the insulator such that a portion (130) of the cascaded light guide has an air interface (424). The air interface improves the internal reflection of the cascaded light guide. The cascaded light guide may include a self-aligned color filter (114B,114G) having, air-gaps (.422). between adjacent color filters. These characteristics of the light guide eliminate the need for a microlens. Additionally, an anti-reflection stack (230) is interposed between the substrate (106) and the light guide (116) to reduce backward reflection from the image sensor. Two pixels of having different color filters may have a difference in the thickness of an anti-reflection film within the anti-reflection stack.

WO 2009/091484 A1

NO, PL, PT, RO, SE, SI, SK, TR), OAPI (BF, BJ, CF, CG, CI, CM, GA, GN, GQ, GW, ML, MR, NE, SN, TD, TG).

Published:
— *with international search report*