17105105
20050320871

(12) INTERNATIONAL APPLICATION PUBLISHED UNDER THE PATENT COOPERATION TREATY (PCT)

(19) World Intellectual Property Organization
International Bureau

(43) International Publication Date
3 June 2004 (03.06.2004)

PCT

(10) International Publication Number
WO 2004/045739 A3

(51) International Patent Classification[7]: B08B 3/12

(21) International Application Number:
PCT/IB2003/006411

(22) International Filing Date:
18 November 2003 (18.11.2003)

(25) Filing Language: English

(26) Publication Language: English

(30) Priority Data:
10/299,596 18 November 2002 (18.11.2002) US

(71) Applicants *(for all designated States except US)*: **RECIF** [FR/FR]; Zone Industrielle du Moulin, Rue Aristide Berges, F-31840 Aussonne (FR). **TECHSONIC** [FR/FR]; ZAC des Alisiers, Les Aliziers Bât B, F06600 Antibes (FR).

(72) Inventors; and

(75) Inventors/Applicants *(for US only)*: **CHING, Gil** [FR/FR]; Chemin de l'Escure, F-06600 Le Bar sur Loup (FR). **PERRUT, Vincent** [FR/FR]; 167 Avenue Stalingrad, F-38340 Voreppe (FR). **RUCH, Vincent** [FR/FR]; 8 Boulevard Clémenceau, F-83300 Draguignan (FR). **FRESQUET, Gilles** [FR/FR]; 15 Rue des Iris Jaunes, F-31320 Castanet Tolosan (FR).

(74) Agent: **MORELLE, Guy,**; Cabinet Morelle & Bardou, SC, 9 Avenue De L'europe, BP 53, F-31527 Ramonville Cedex (FR).

(81) Designated States *(national)*: AE, AG, AL, AM, AT, AT (utility model), AU, AZ, BA, BB, BG, BR, BY, BZ, CA, CH, CN, CO, CR, CU, CZ, DE, DE (utility model), DK, DM, DZ, EC, EE, ES, FI, GB, GD, GE, GH, GM, HR, HU, ID, IL, IN, IS, JP, KE, KG, KP, KR, KZ, LC, LK, LR, LS, LT, LU, LV, MA, MD, MG, MK, MN, MW, MX, MZ, NI, NO, NZ, OM, PG, PH, PL, PT, RO, RU, SC, SD, SE, SG, SK, SL, SY, TJ, TM, TN, TR, TT, TZ, UA, UG, US, UZ, VC, VN, YU, ZA, ZM, ZW.

(84) Designated States *(regional)*: ARIPO patent (BW, GH, GM, KE, LS, MW, MZ, SD, SL, SZ, TZ, UG, ZM, ZW), Eurasian patent (AM, AZ, BY, KG, KZ, MD, RU, TJ, TM),

[Continued on next page]

(54) Title: SUBSTRATE PROCESSING APPARATUS FOR PROCESSING SUBSTRATES USING DENSE PHASE GAS AND SONIC WAVES

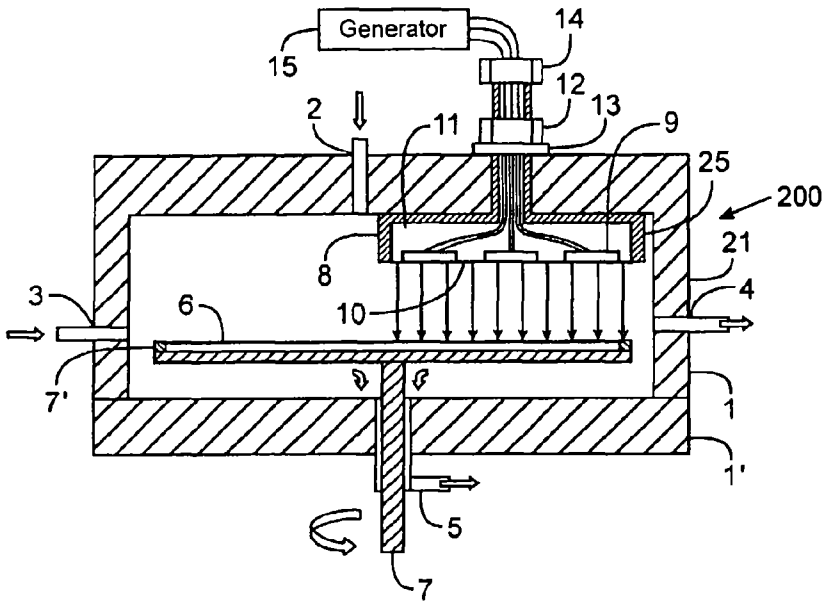

(57) Abstract: Embodiments of the invention are directed to substrate processing apparatuses and methods for processing substrates. In one embodiment, a substrate processing apparatus includes a processing chamber, a substrate holder inside of the processing chamber for holding a substrate, and a sonic box in the processing chamber for supplying sonic waves substantially perpendicularly to the substrate. The sonic box may comprises a membrane, and a transducer coupled to the membrane.

WO 2004/045739 A3

162162

ACTION