FIG. 1

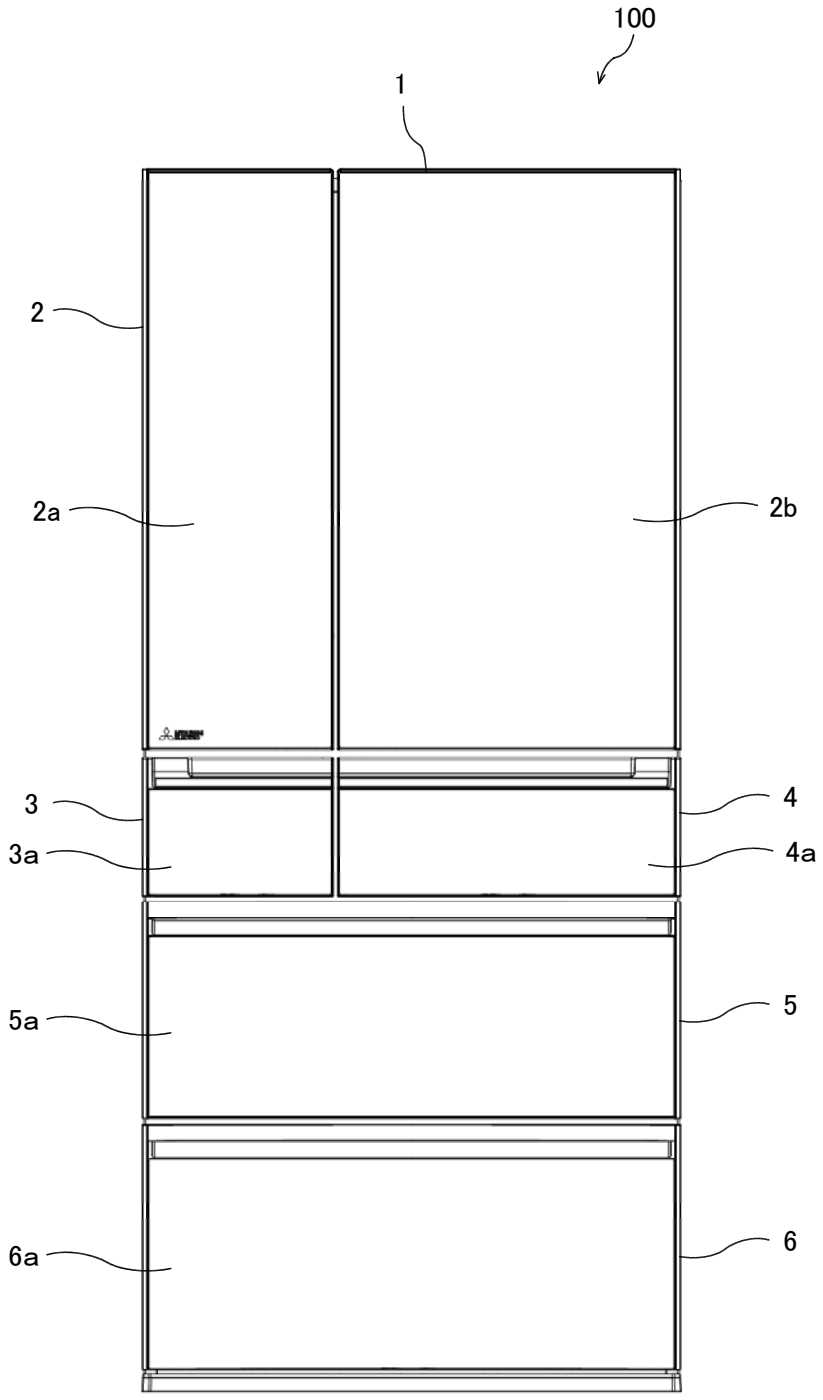

FIG. 2

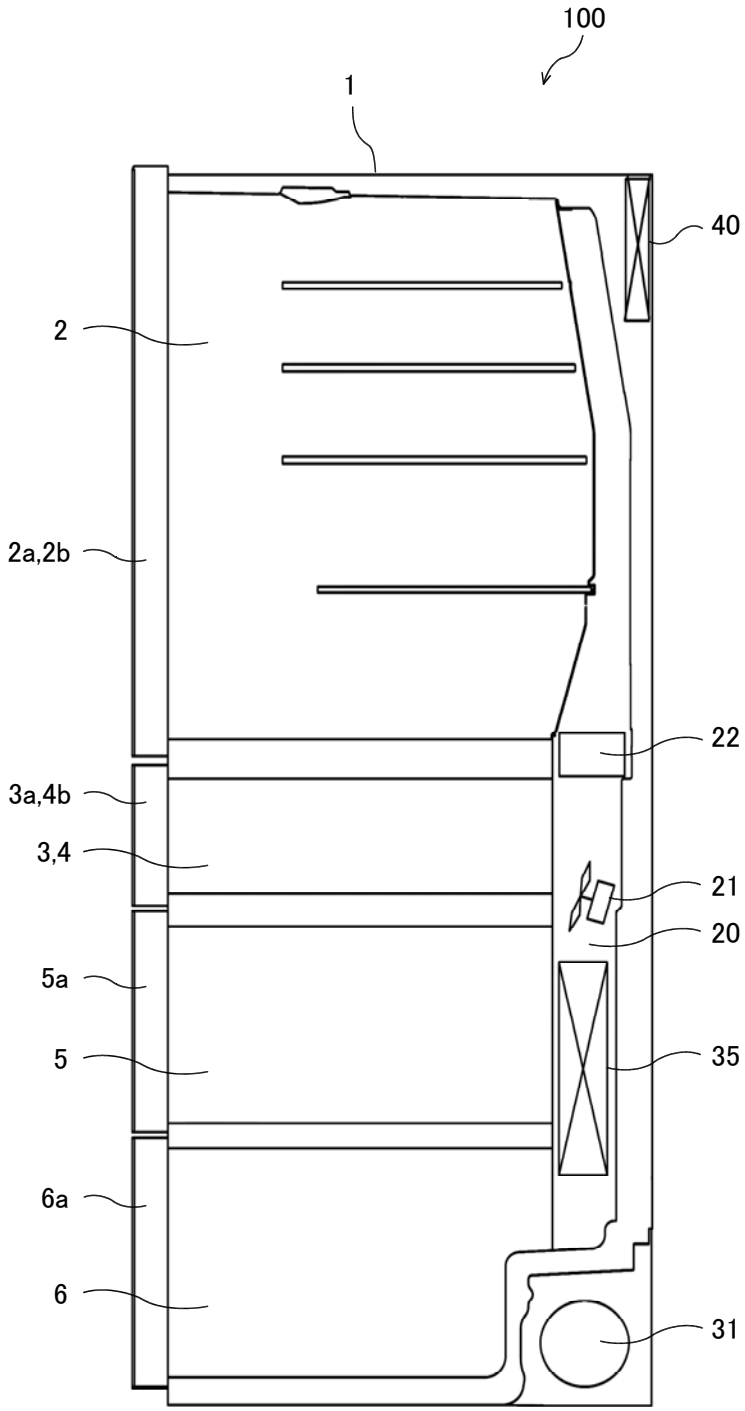

FIG. 3

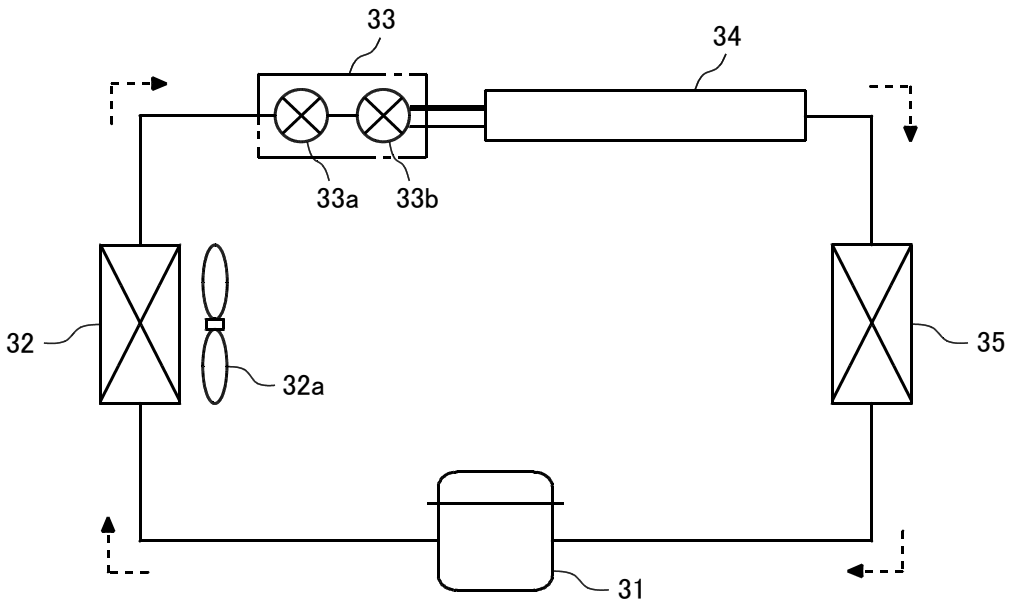
33
34
33a
33b
32
32a
35
31

FIG. 4

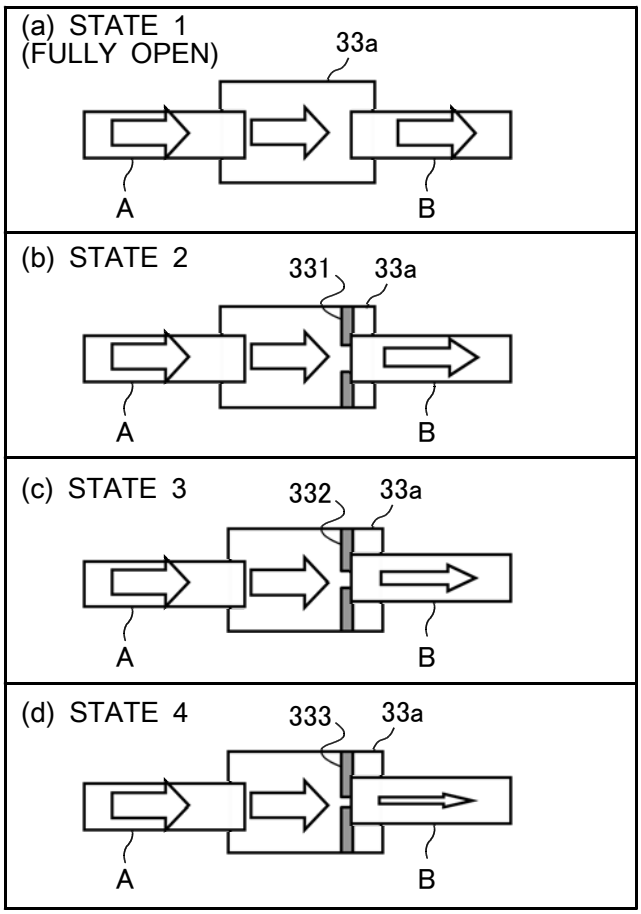
(a) STATE 1
(FULLY OPEN)
33a
A
B
(b) STATE 2
331
33a
A
B
(c) STATE 3
332
33a
A
B
(d) STATE 4
333
33a
A
B

FIG. 5

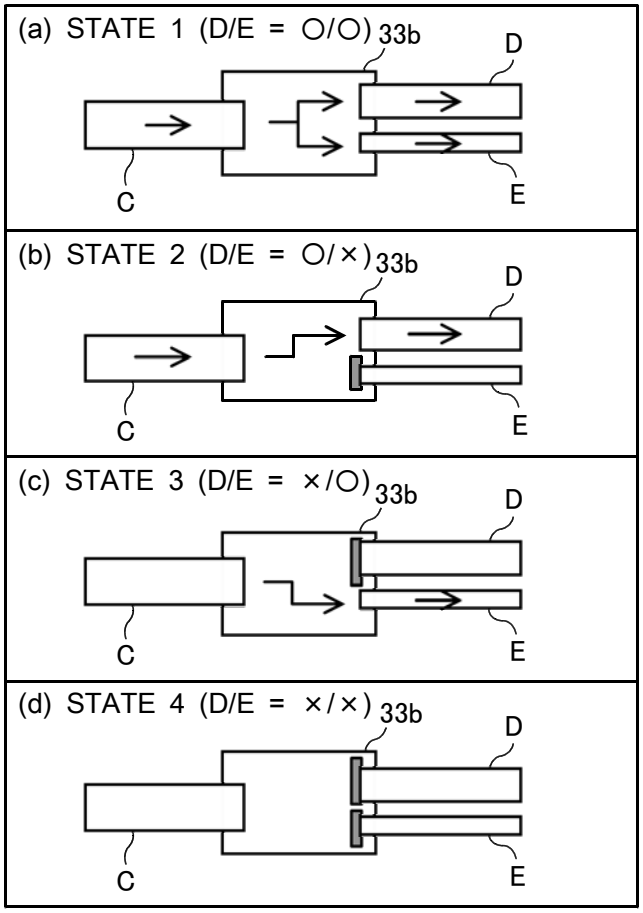
(a) STATE 1 (D/E = ○/○)
33b
D
C
E
(b) STATE 2 (D/E = ○/×)
33b
D
C
E
(c) STATE 3 (D/E = ×/○)
33b
D
C
E
(d) STATE 4 (D/E = ×/×)
33b
D
C
E

FIG. 6

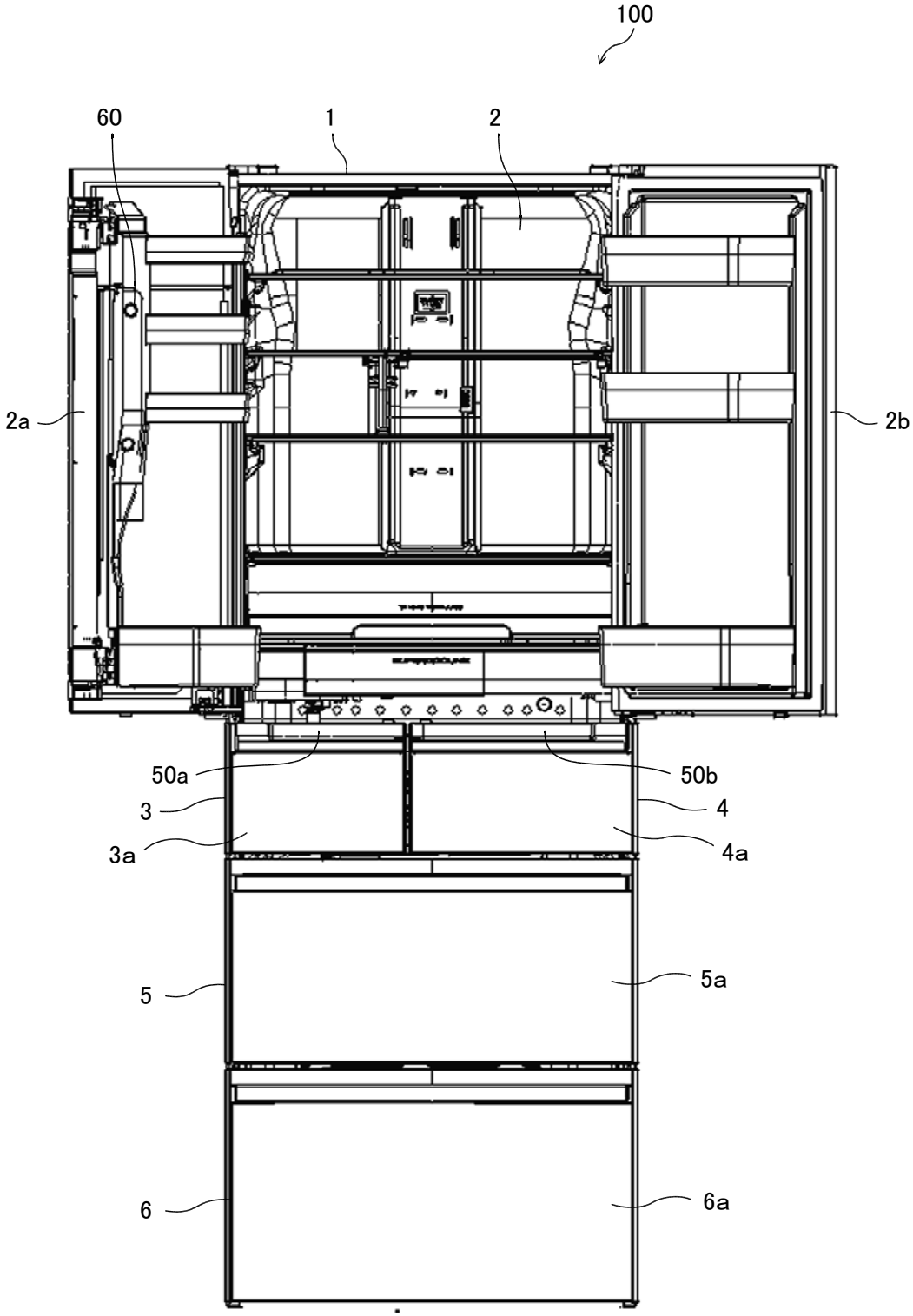

FIG. 7

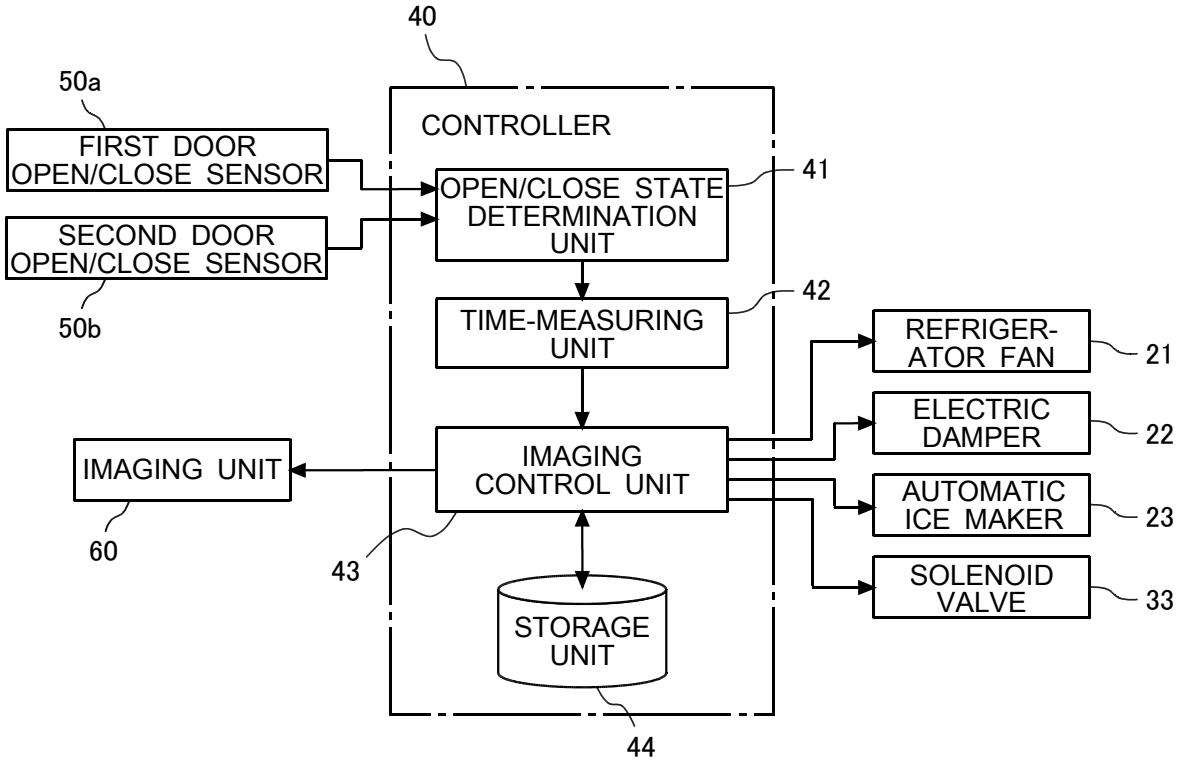

FIG. 8

ELECTRICAL COMPONENT	AMPERAGE
REFRIGERATOR FAN	0.68A
SOLENOID VALVE	0.53A
AUTOMATIC ICE MAKER	0.64A
ELECTRIC DAMPER	0.14A
TOTAL	1.99A

FIG. 9

INTERRUPT PRIORITY	ELECTRICAL COMPONENT
1	AUTOMATIC ICE MAKER
2	SOLENOID VALVE
3	ELECTRIC DAMPER
4	FAN

FIG. 10

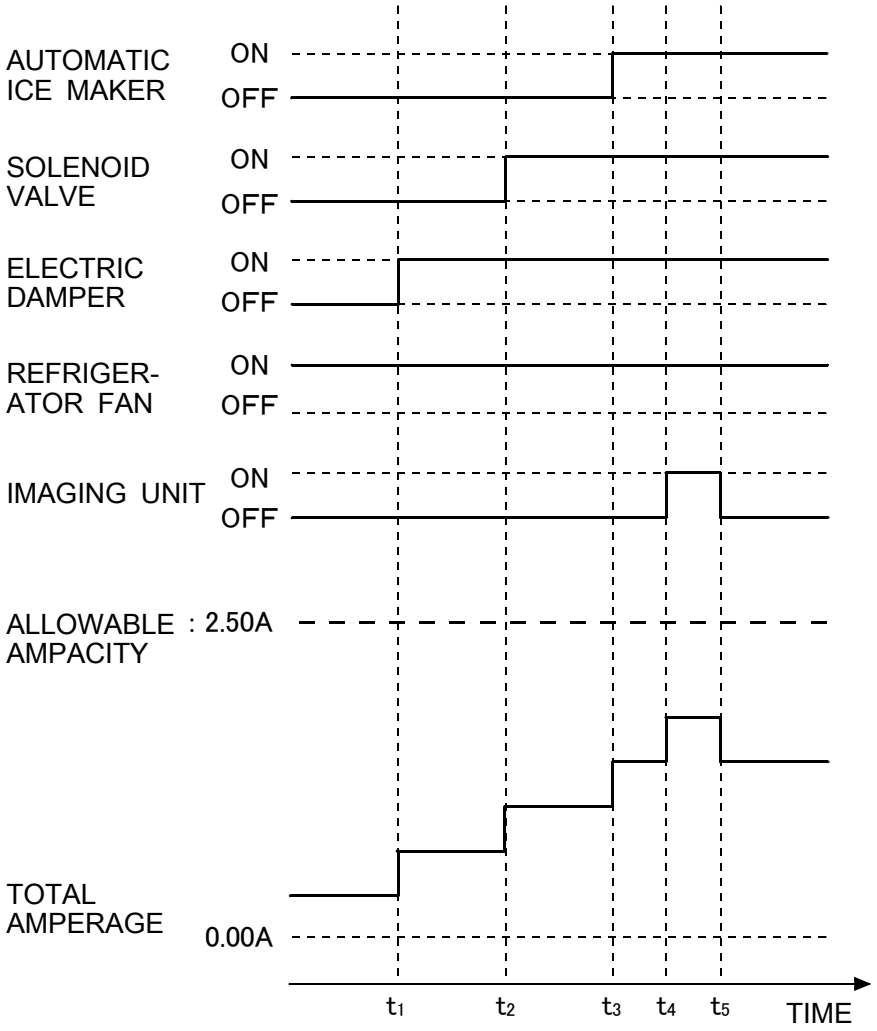
AUTOMATIC ICE MAKER
ON
OFF
SOLENOID VALVE
ON
OFF
ELECTRIC DAMPER
ON
OFF
REFRIGER-ATOR FAN
ON
OFF
IMAGING UNIT
ON
OFF
ALLOWABLE AMPACITY
: 2.50A
TOTAL AMPERAGE
0.00A
t1
t2
t3
t4
t5
TIME

FIG. 11

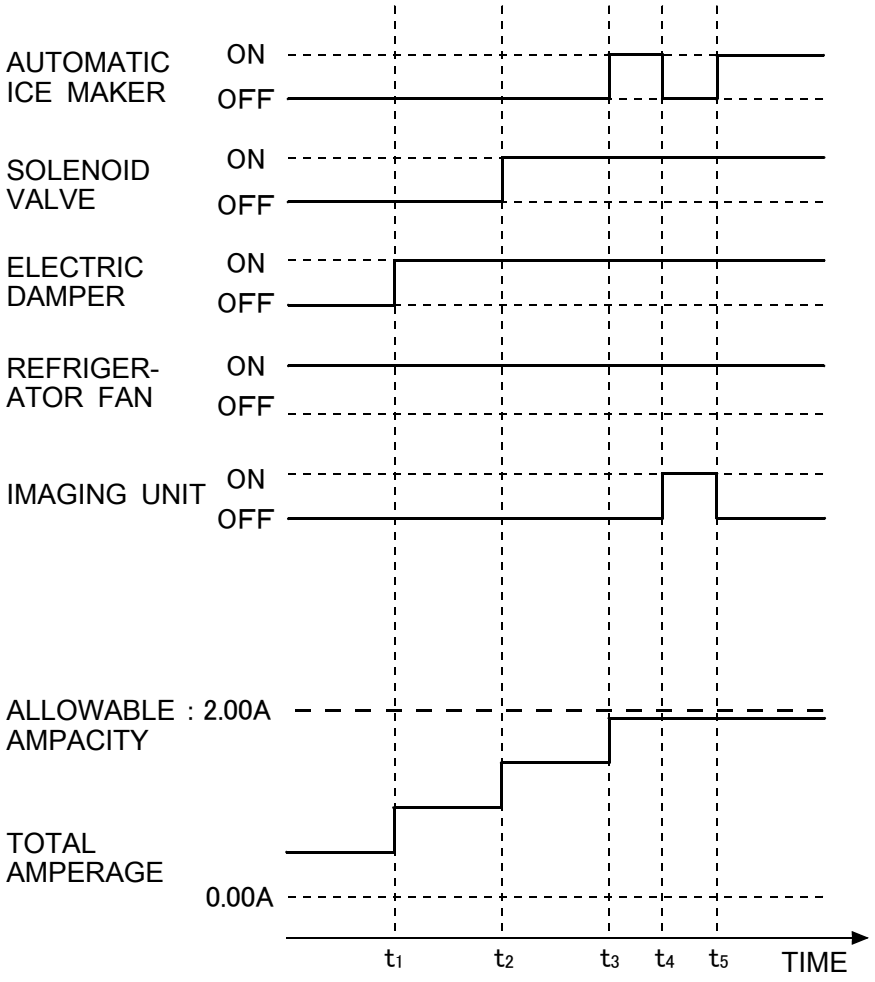
AUTOMATIC ICE MAKER
ON
OFF
SOLENOID VALVE
ON
OFF
ELECTRIC DAMPER
ON
OFF
REFRIGER-ATOR FAN
ON
OFF
IMAGING UNIT
ON
OFF
ALLOWABLE AMPACITY
: 2.00A
TOTAL AMPERAGE
0.00A
t1
t2
t3
t4
t5
TIME

FIG. 12

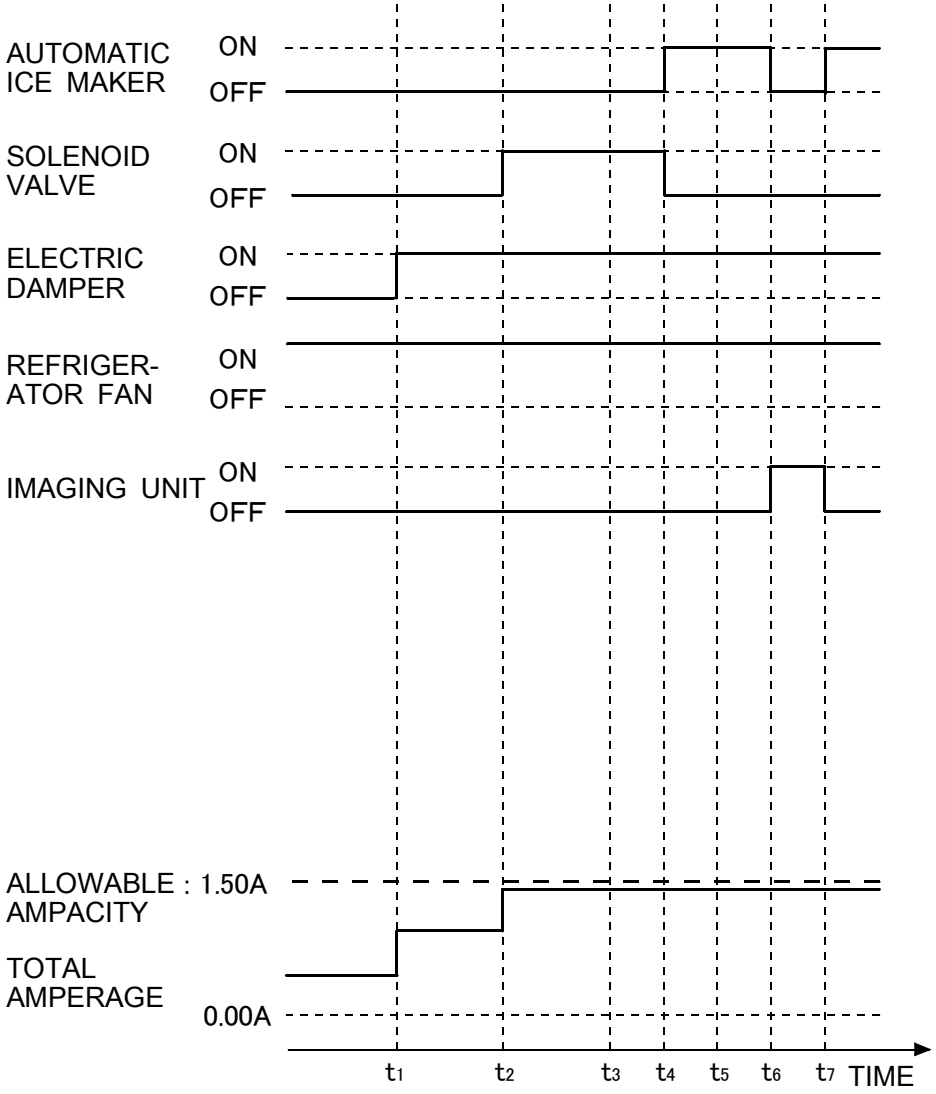
AUTOMATIC ICE MAKER
ON
OFF
SOLENOID VALVE
ON
OFF
ELECTRIC DAMPER
ON
OFF
REFRIGER-ATOR FAN
ON
OFF
IMAGING UNIT
ON
OFF
ALLOWABLE AMPACITY : 1.50A
TOTAL AMPERAGE
0.00A
t1
t2
t3
t4
t5
t6
t7
TIME

FIG. 13

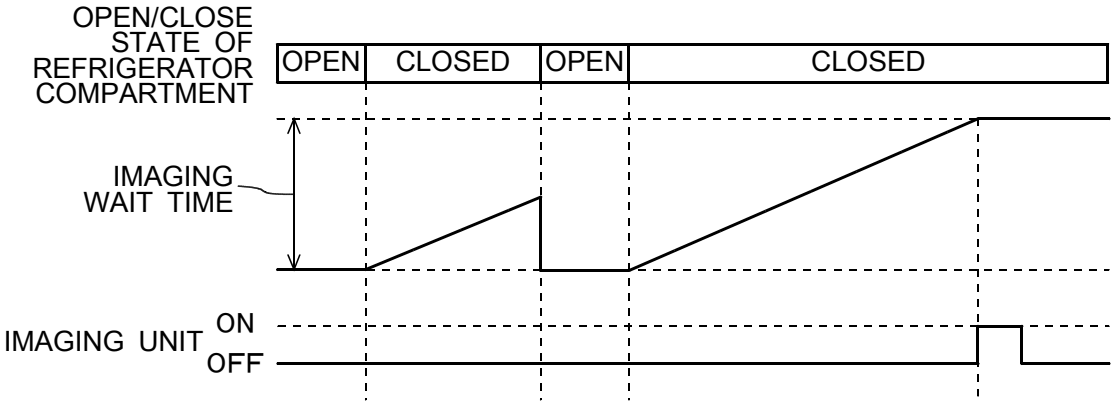
OPEN/CLOSE STATE OF REFRIGERATOR COMPARTMENT
OPEN
CLOSED
OPEN
CLOSED
IMAGING WAIT TIME
IMAGING UNIT
ON
OFF

FIG. 14

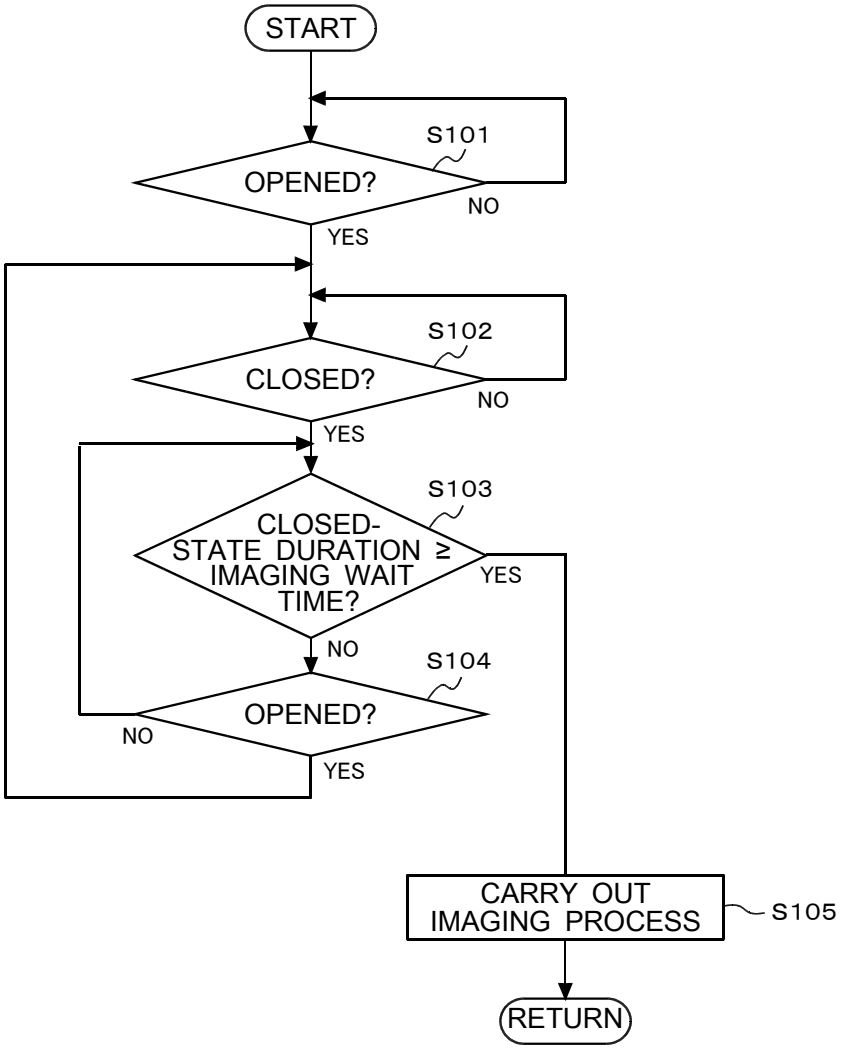
START
S101
OPENED?
NO
YES
S102
CLOSED?
NO
YES
S103
CLOSED-STATE DURATION ≥ IMAGING WAIT TIME?
YES
NO
S104
OPENED?
NO
YES
CARRY OUT IMAGING PROCESS
S105
RETURN

FIG. 15

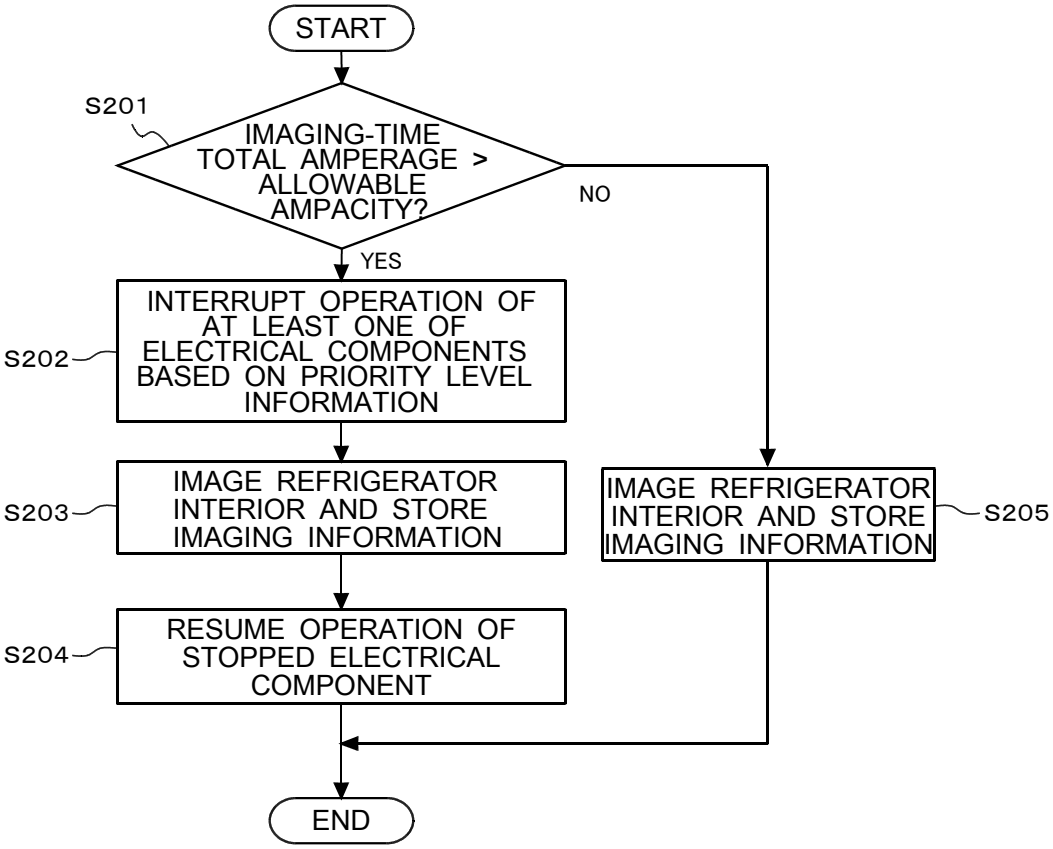
START
S201
IMAGING-TIME TOTAL AMPERAGE > ALLOWABLE AMPACITY?
NO
YES
S202
INTERRUPT OPERATION OF AT LEAST ONE OF ELECTRICAL COMPONENTS BASED ON PRIORITY LEVEL INFORMATION
S203
IMAGE REFRIGERATOR INTERIOR AND STORE IMAGING INFORMATION
S204
RESUME OPERATION OF STOPPED ELECTRICAL COMPONENT
IMAGE REFRIGERATOR INTERIOR AND STORE IMAGING INFORMATION
S205
END