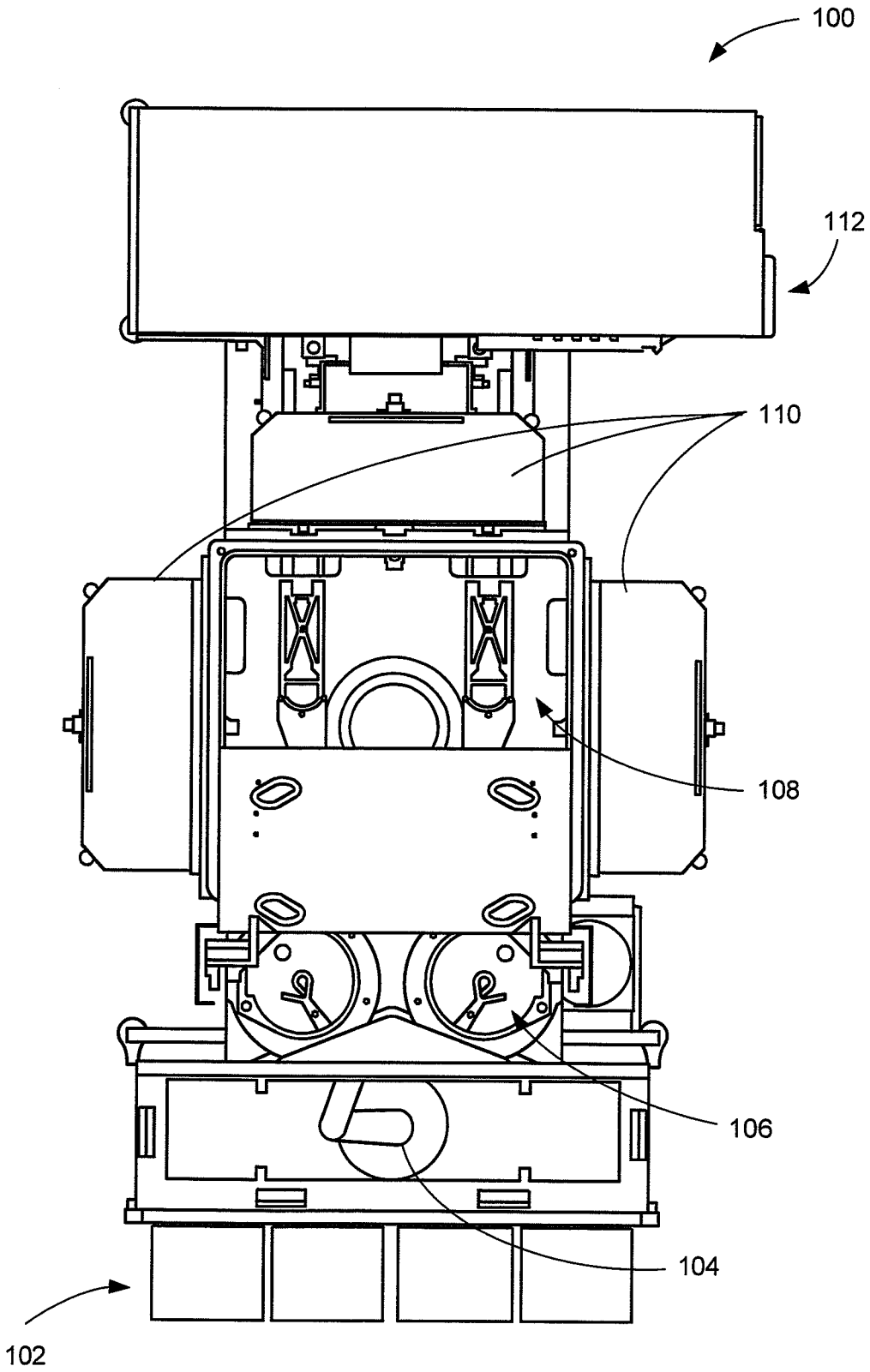

FIG. 1

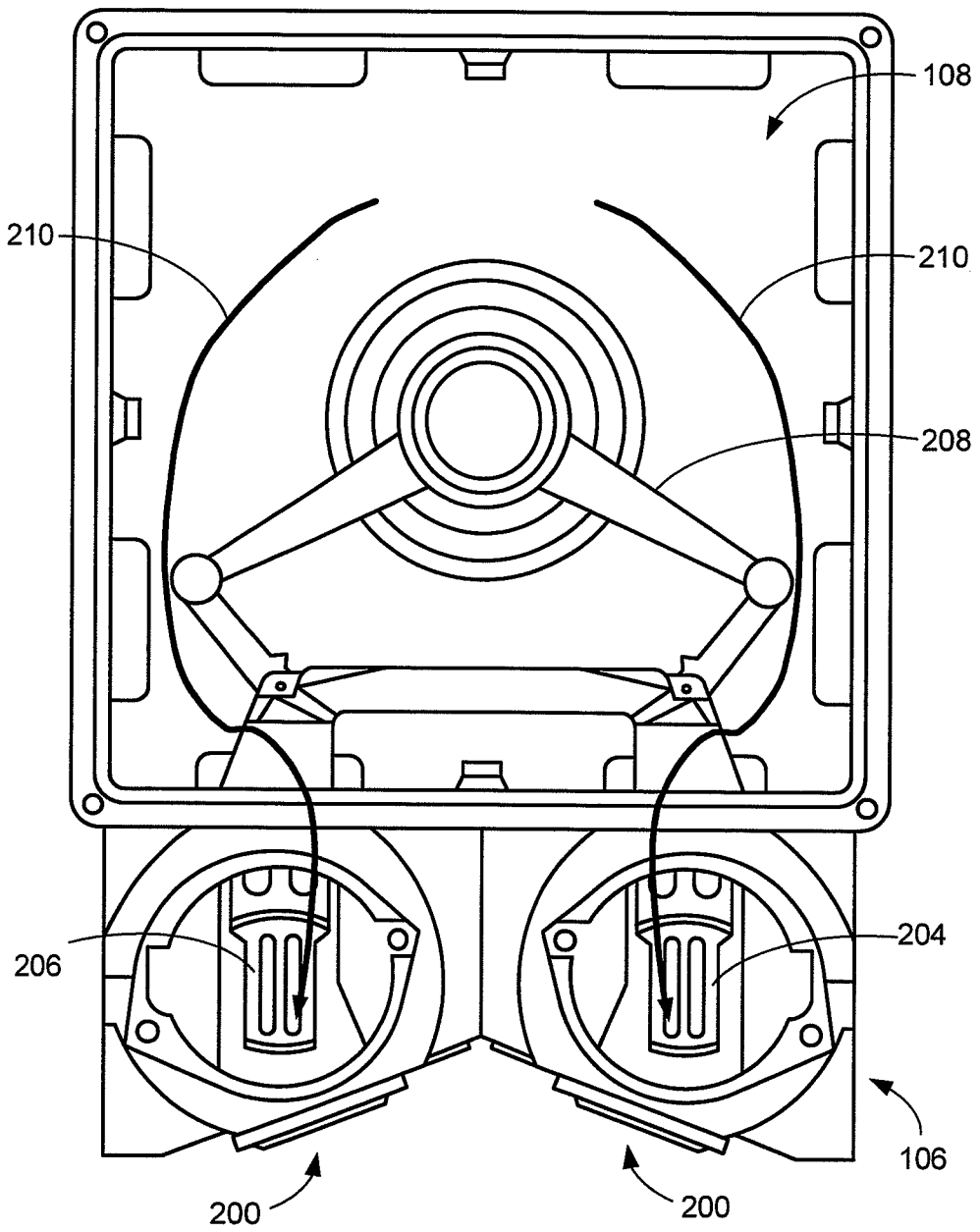

FIG. 2

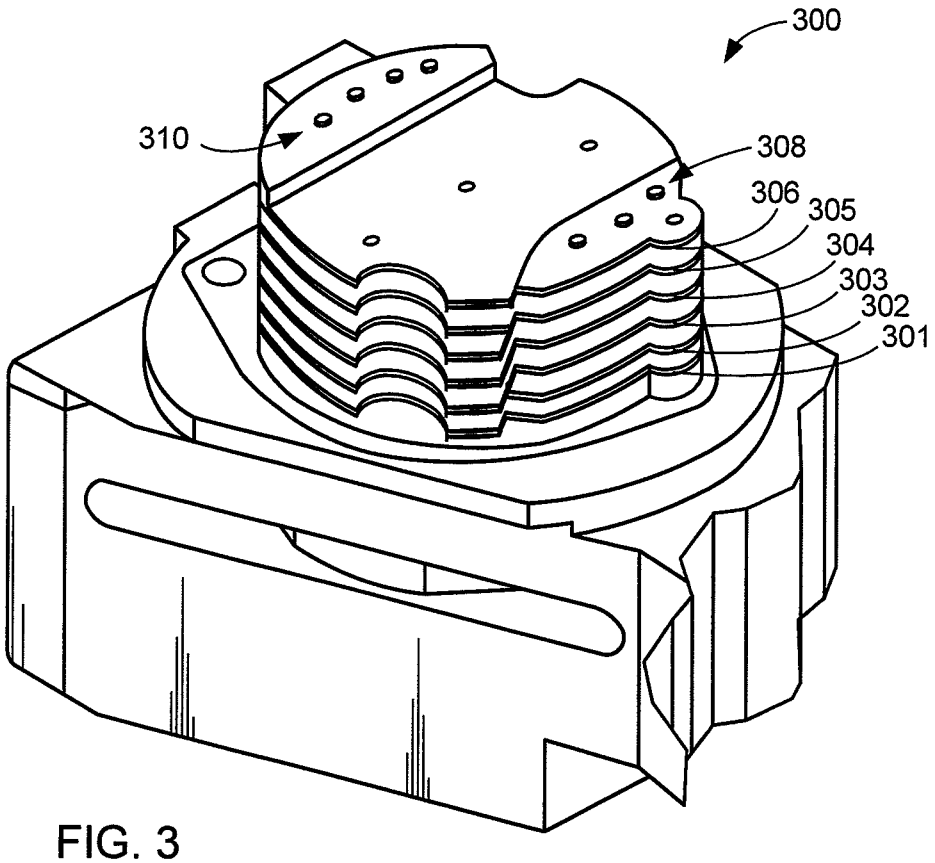

FIG. 3

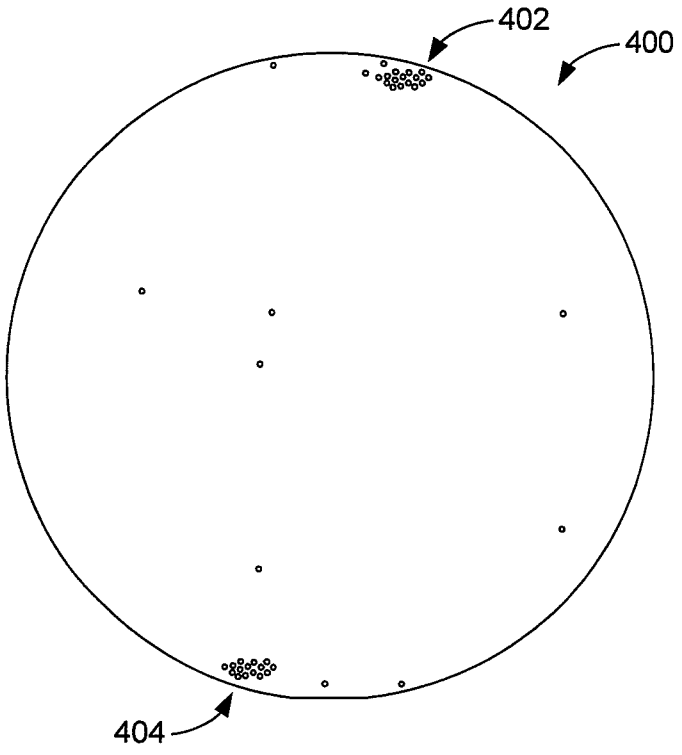

FIG. 4

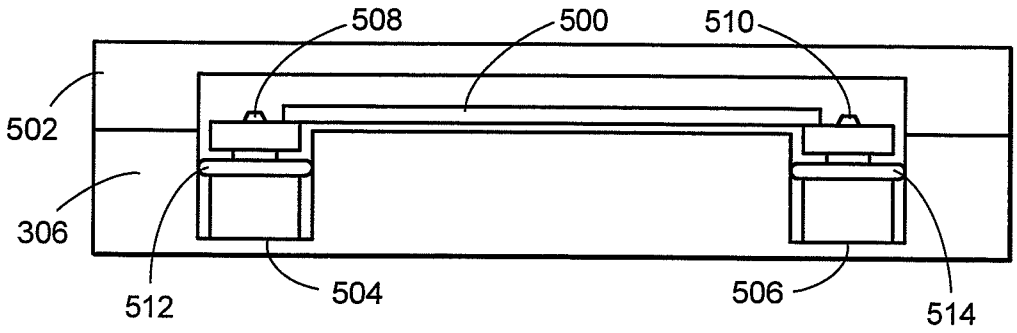

FIG. 5

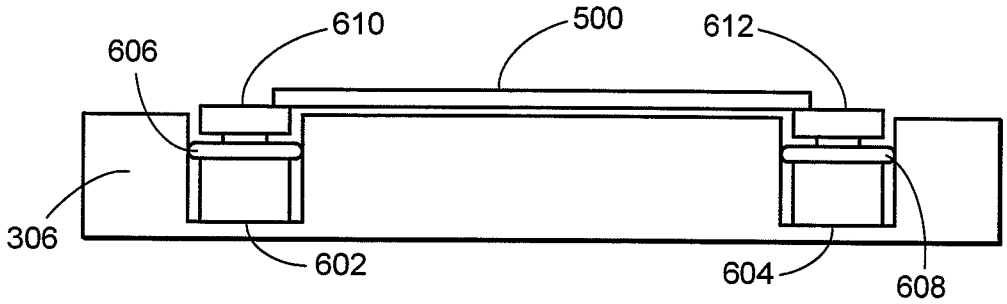

FIG. 6

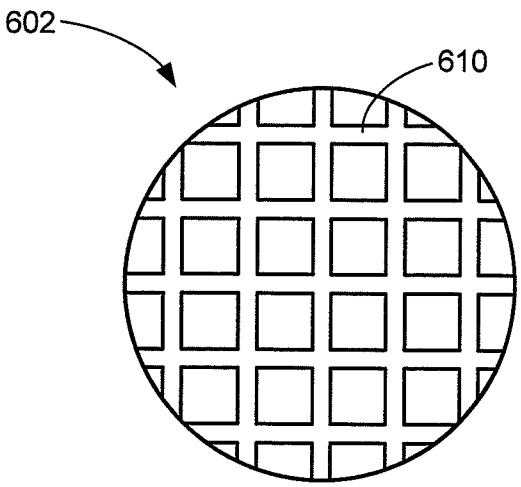

FIG. 7

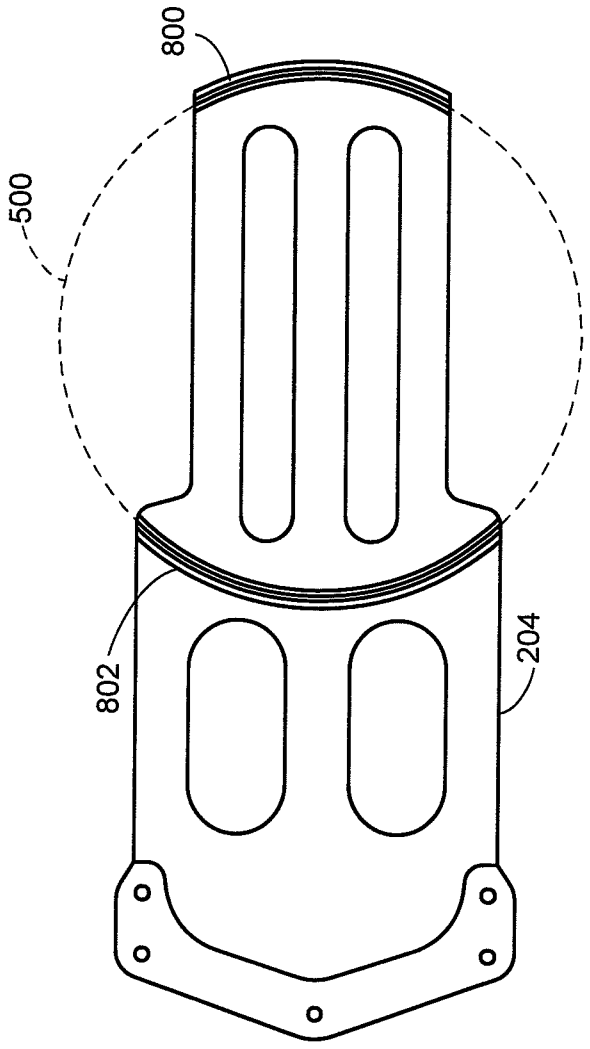

FIG. 8

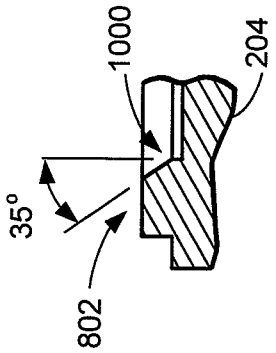

FIG. 10

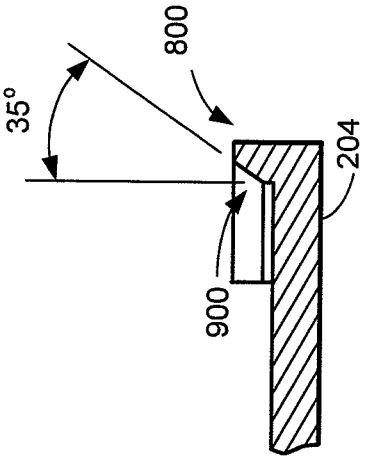

FIG. 9

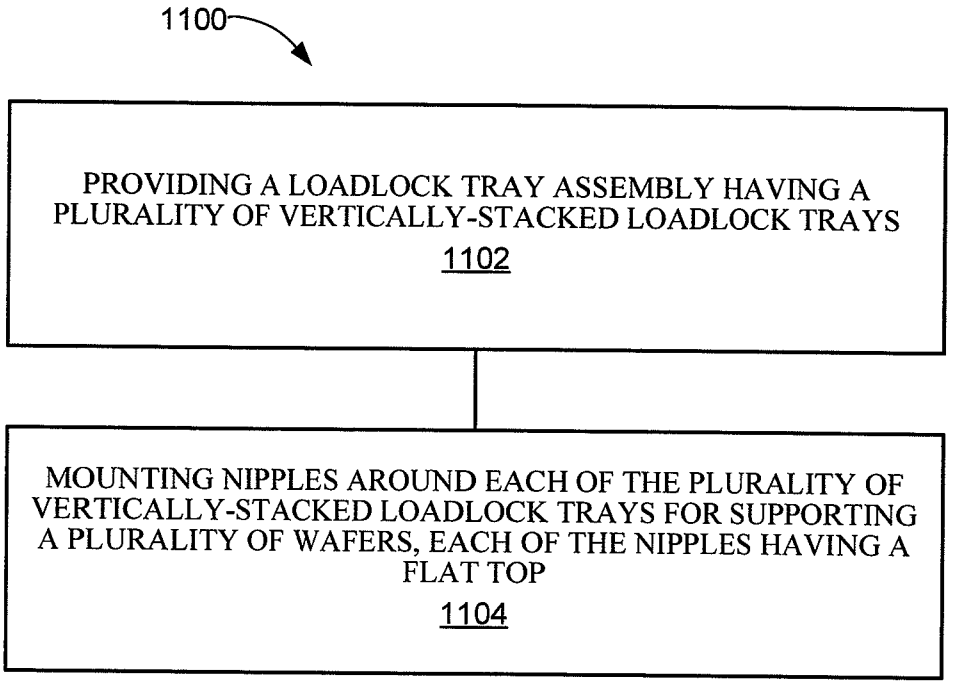
1100
PROVIDING A LOADLOCK TRAY ASSEMBLY HAVING A PLURALITY OF VERTICALLY-STACKED LOADLOCK TRAYS
1102
MOUNTING NIPPLES AROUND EACH OF THE PLURALITY OF VERTICALLY-STACKED LOADLOCK TRAYS FOR SUPPORTING A PLURALITY OF WAFERS, EACH OF THE NIPPLES HAVING A FLAT TOP
1104

FIG. 11