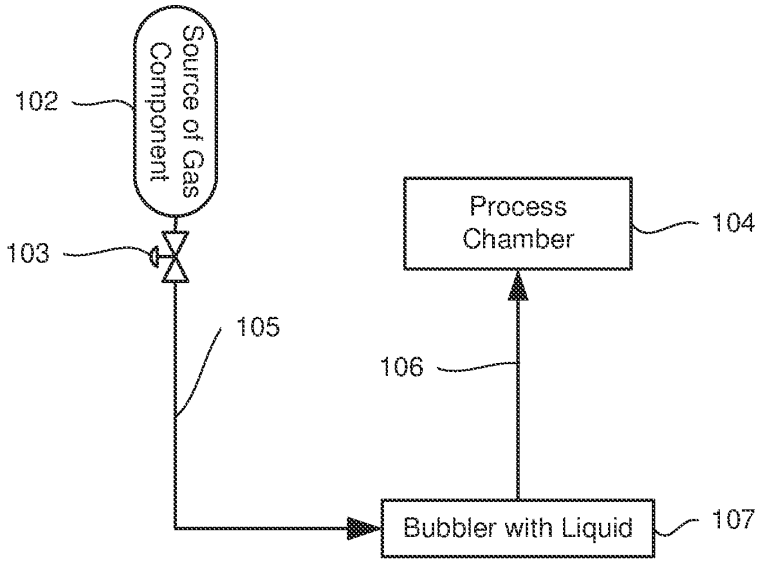
Source of Gas Component
102
103
105
Process Chamber
104
106
Bubbler with Liquid
107

FIG. 1A

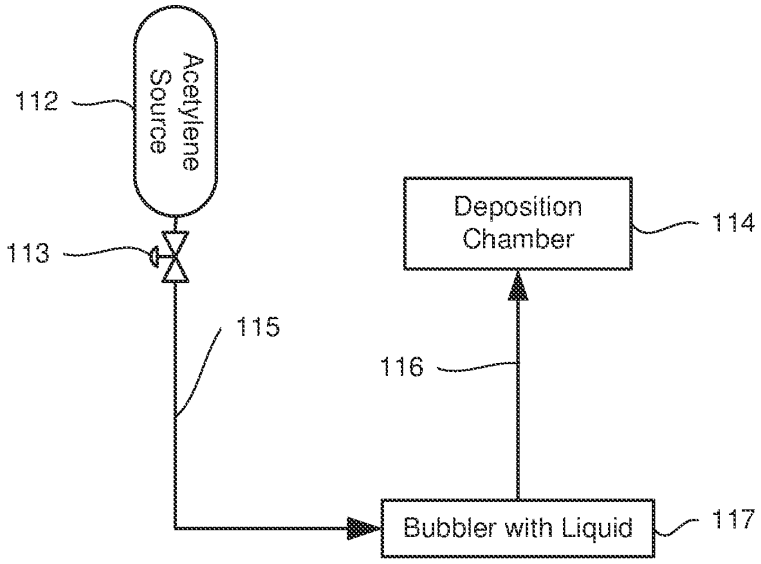
Acetylene Source
112
113
115
116
Deposition Chamber
114
Bubbler with Liquid
117

FIG. 1B

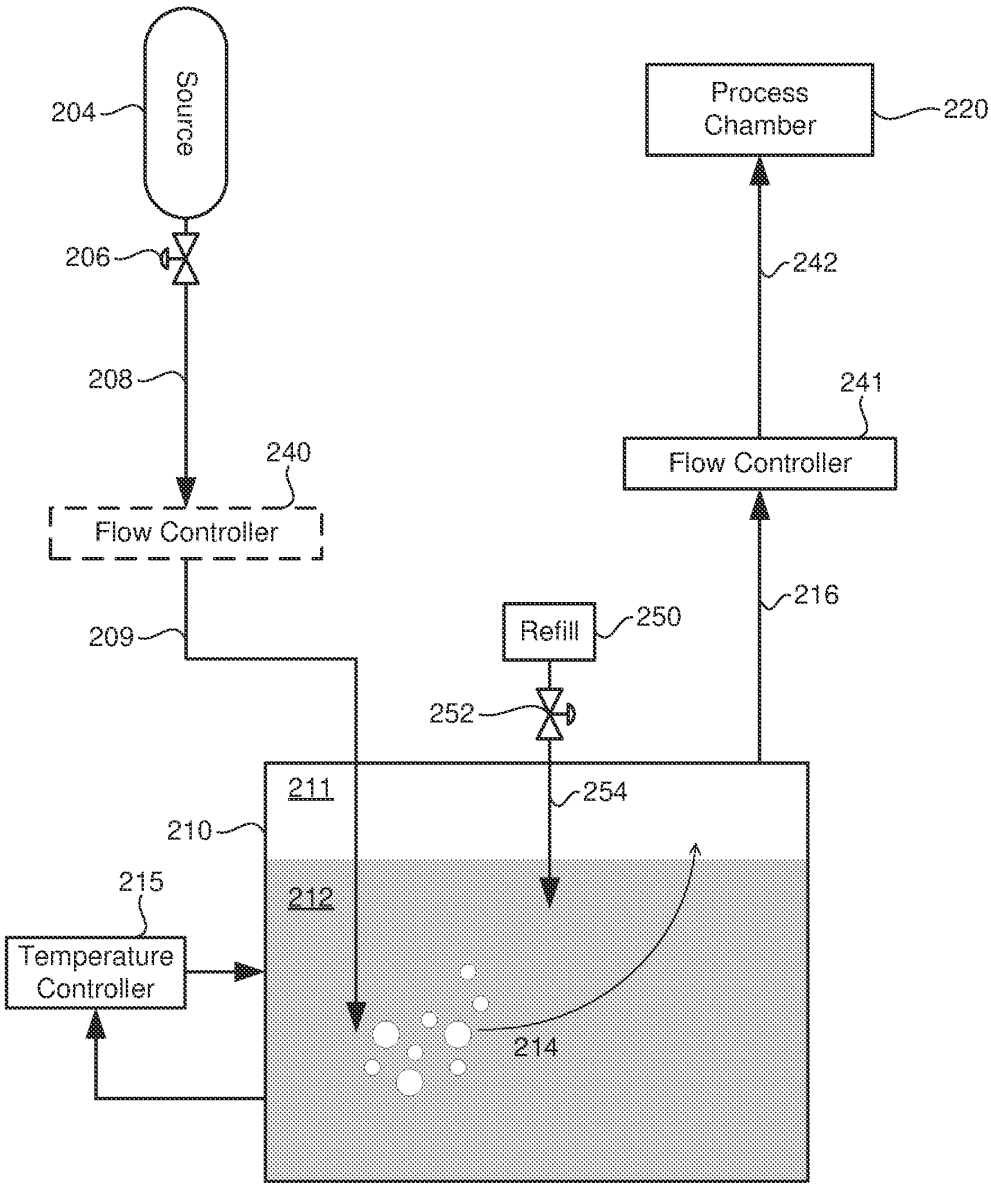
Source
204
206
208
240
Flow Controller
209
Refill
250
252
254
211
210
212
215
Temperature Controller
214
216
Flow Controller
241
242
Process Chamber
220

FIG. 2A

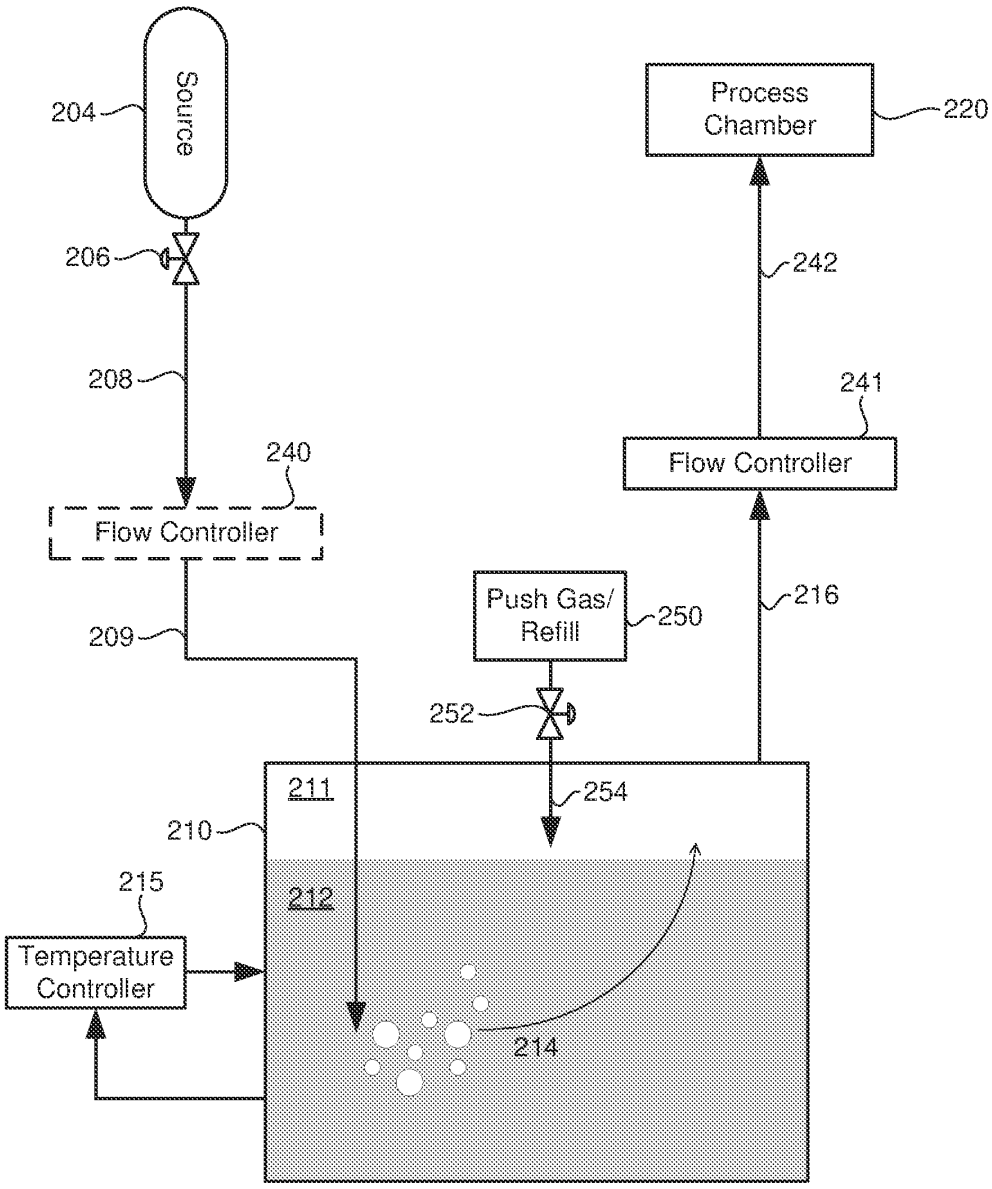
Source
204
206
208
240
Flow Controller
209
Process Chamber
220
242
241
Flow Controller
216
Push Gas/ Refill
250
252
254
211
210
212
215
Temperature Controller
214

FIG. 2B

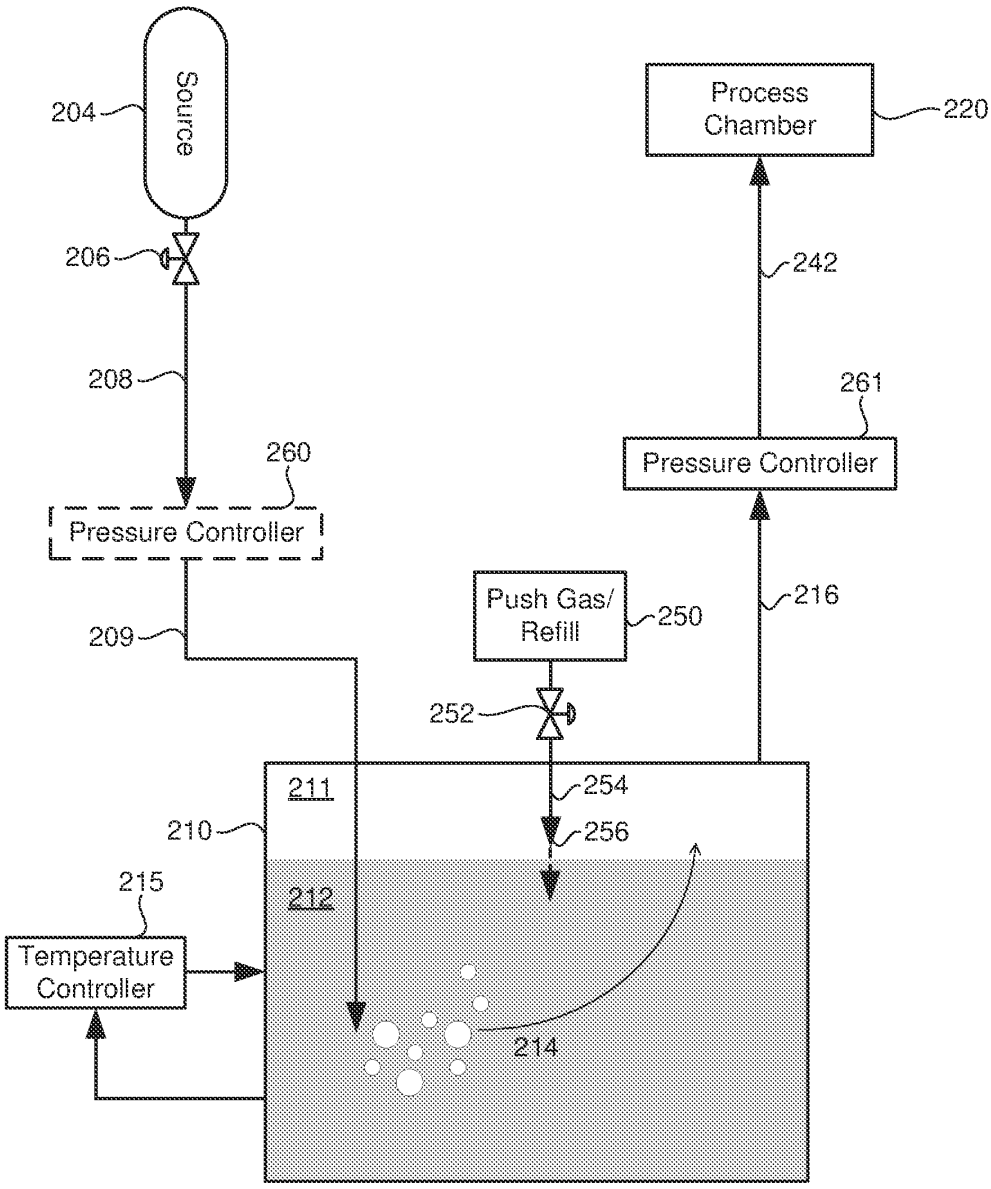
Source
204
206
208
260
Pressure Controller
209
Process Chamber
220
242
261
Pressure Controller
216
Push Gas/ Refill
250
252
211
254
256
210
212
215
Temperature Controller
214

FIG. 2C

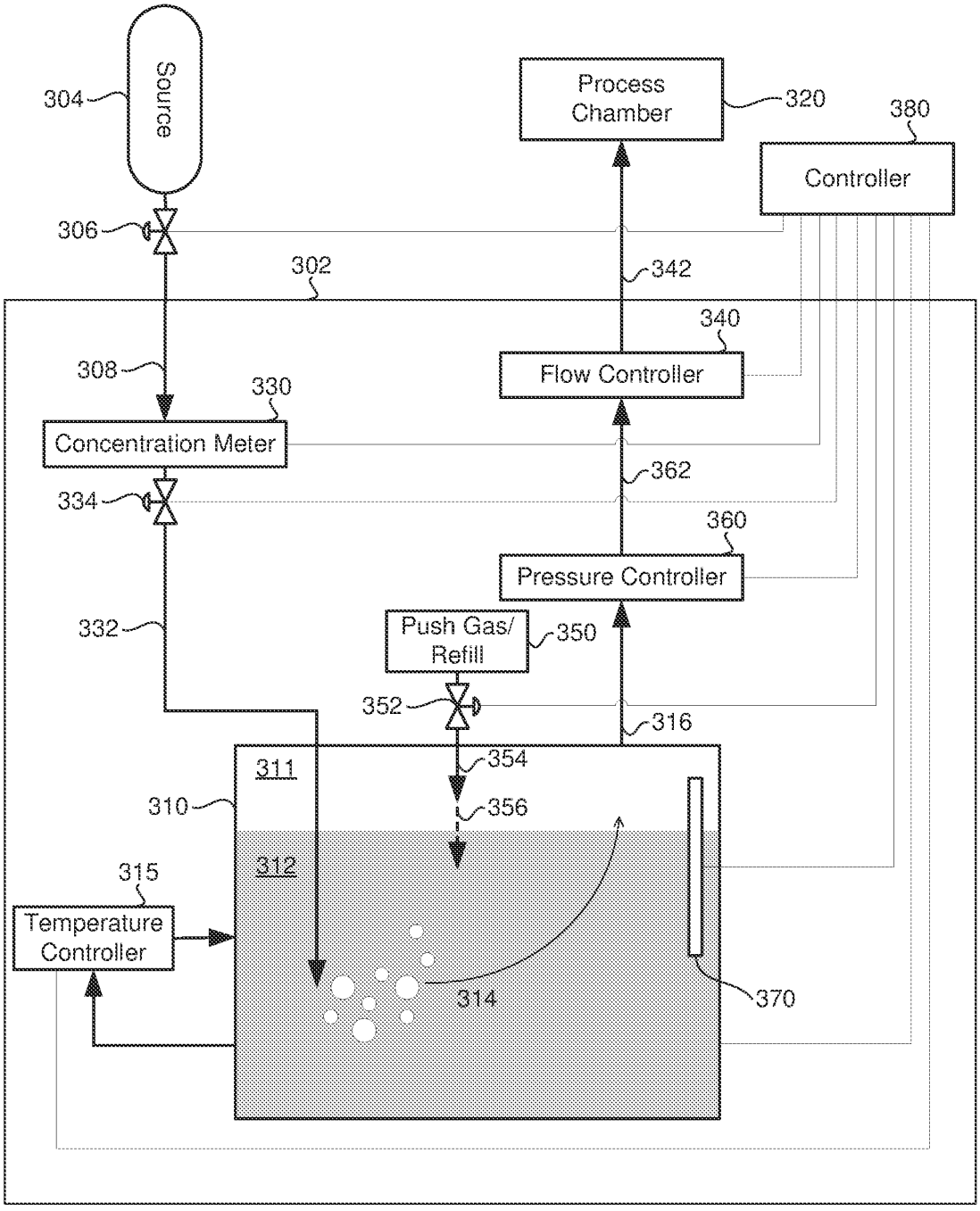
Source
304
Process Chamber
320
380
Controller
306
302
342
340
Flow Controller
308
330
Concentration Meter
362
334
360
Pressure Controller
332
Push Gas/ Refill
350
352
316
311
354
310
356
312
315
Temperature Controller
314
370

FIG. 3A

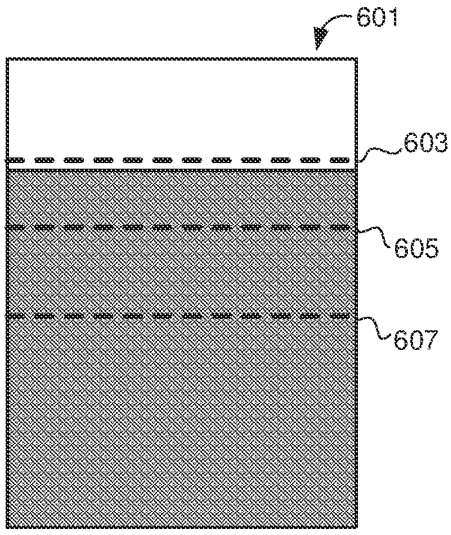
601
603
605
607

FIG. 3B

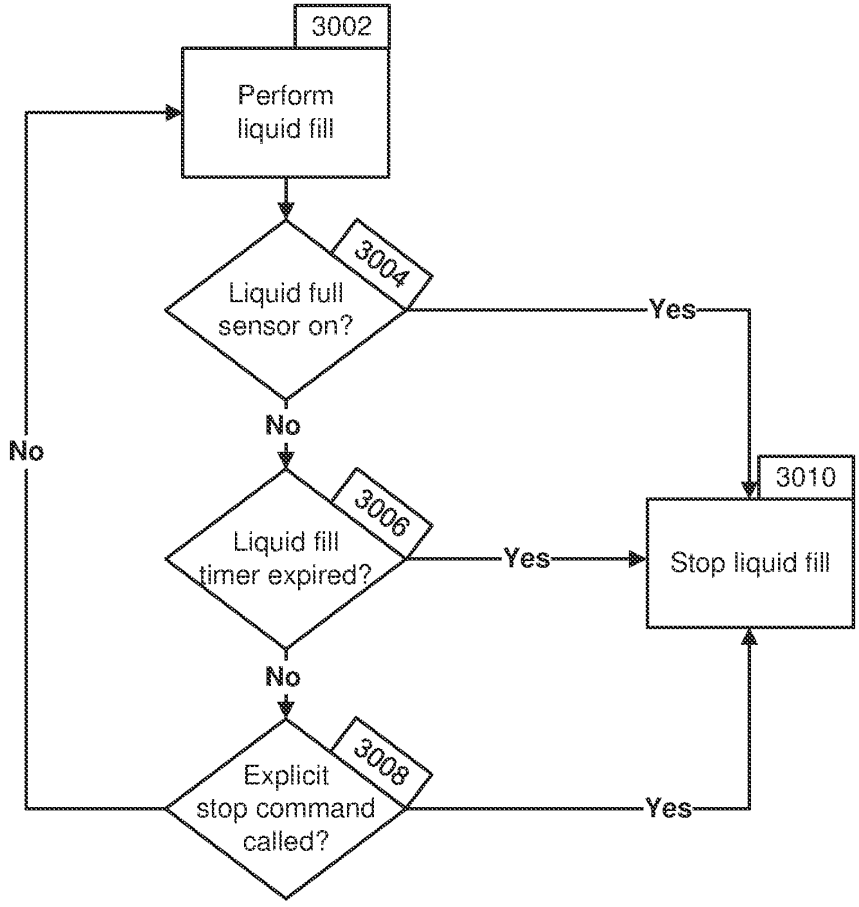
3002
Perform liquid fill
3004
Liquid full sensor on?
Yes
No
3006
Liquid fill timer expired?
Yes
No
3010
Stop liquid fill
3008
Explicit stop command called?
Yes
No

FIG. 3C

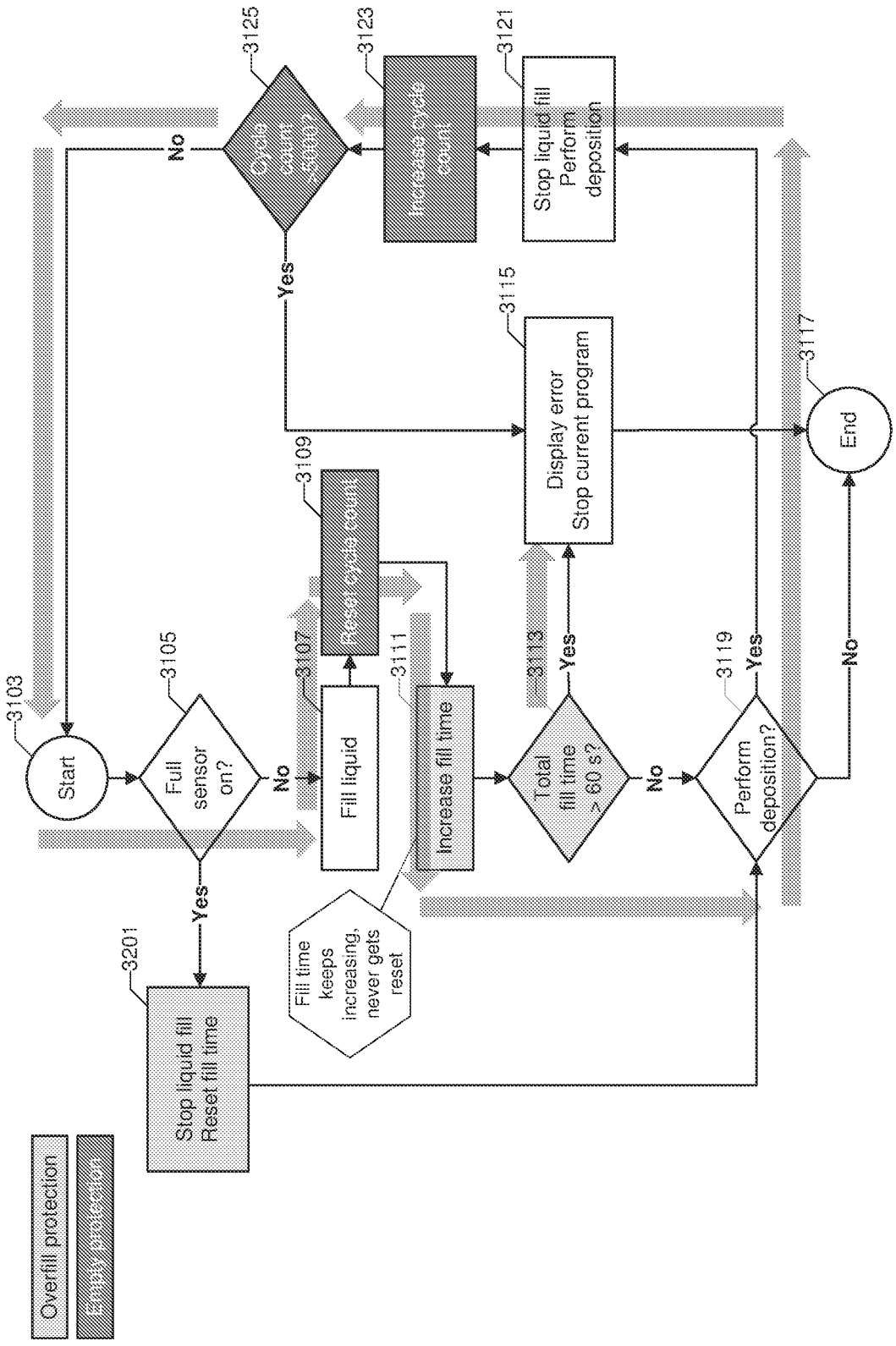
Start
3103
Full sensor on?
3105
No
Yes
Fill liquid
3107
Reset cycle count
3109
Increase fill time
3111
Fill time keeps increasing, never gets reset
Total fill time > 60 s?
3113
Yes
No
Display error
Stop current program
3115
Perform deposition?
3119
Yes
No
End
3117
Cycle count reset?
3125
No
Yes
Increase cycle count
3123
Stop liquid fill
Perform deposition
3121
Stop liquid fill
Reset fill time
3201
Overfill protection
Empty protection

FIG. 3D

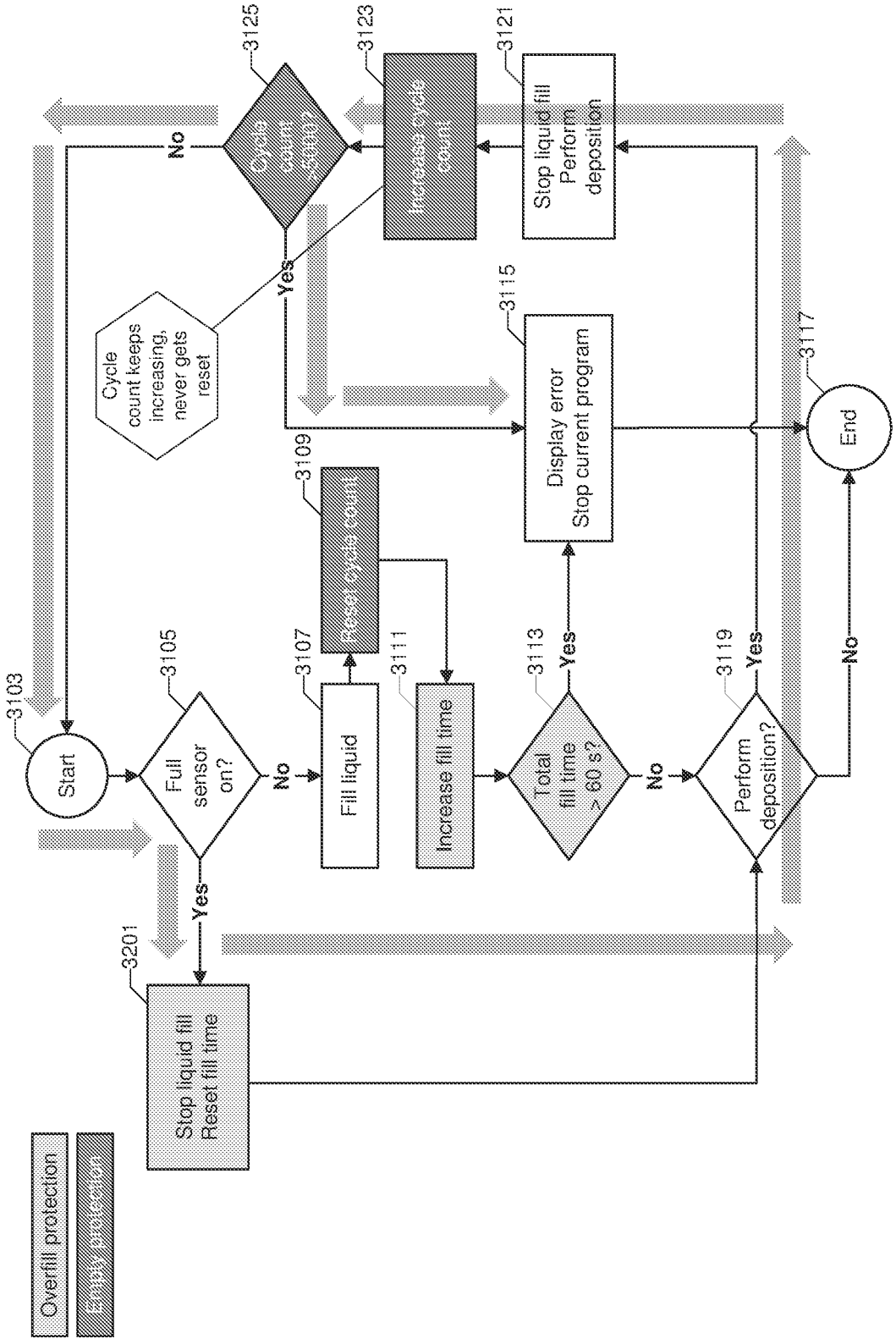
Start
3103
Full sensor on?
3105
No
Yes
Fill liquid
3107
Reset cycle count
3109
Increase fill time
3111
Total fill time > 60 s?
3113
Yes
No
Display error
Stop current program
3115
Perform deposition?
3119
Yes
No
End
3117
Cycle count exceed?
3125
No
Yes
Increase cycle count
3123
Stop liquid fill
Perform deposition
3121
Cycle count keeps increasing, never gets reset
Stop liquid fill
Reset fill time
3201
Overfill protection
Empty protection

FIG. 3E

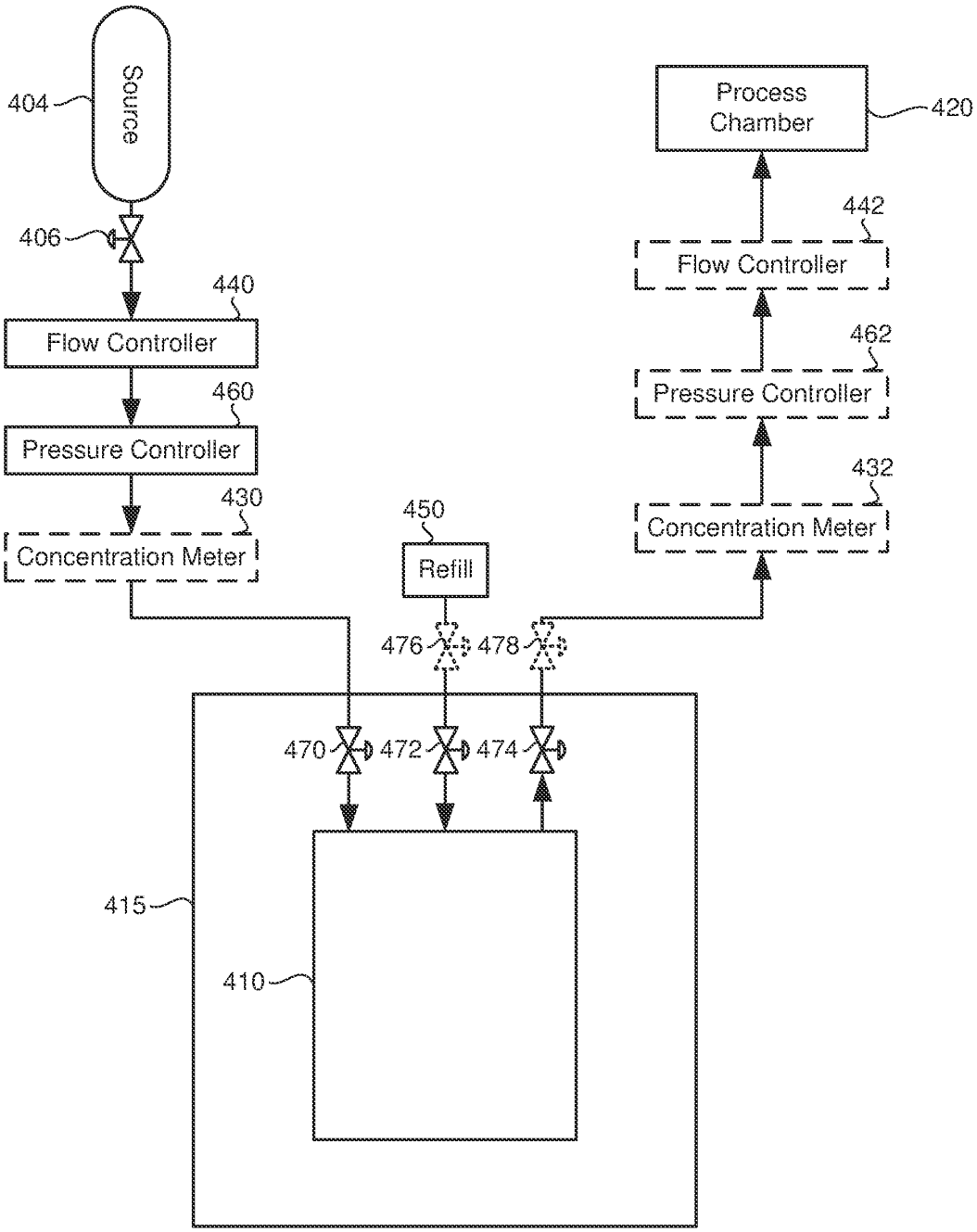
Source
404
406
440
Flow Controller
460
Pressure Controller
430
Concentration Meter
450
Refill
476
478
470
472
474
415
410
Process Chamber
420
442
Flow Controller
462
Pressure Controller
432
Concentration Meter

FIG. 4A

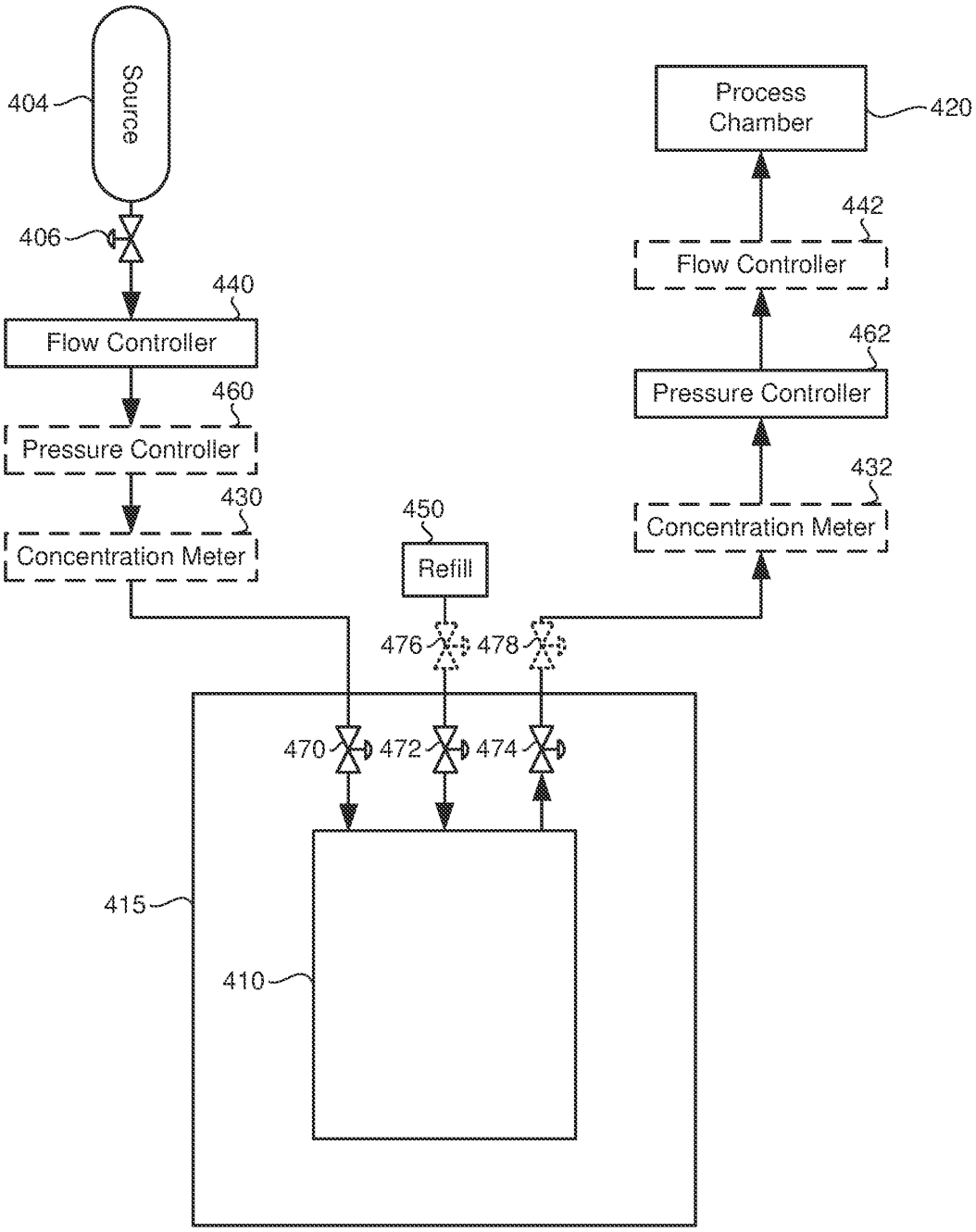
Source
404
406
440
Flow Controller
460
Pressure Controller
430
Concentration Meter
450
Refill
476
478
470
472
474
415
410
Process Chamber
420
442
Flow Controller
462
Pressure Controller
432
Concentration Meter

FIG. 4B

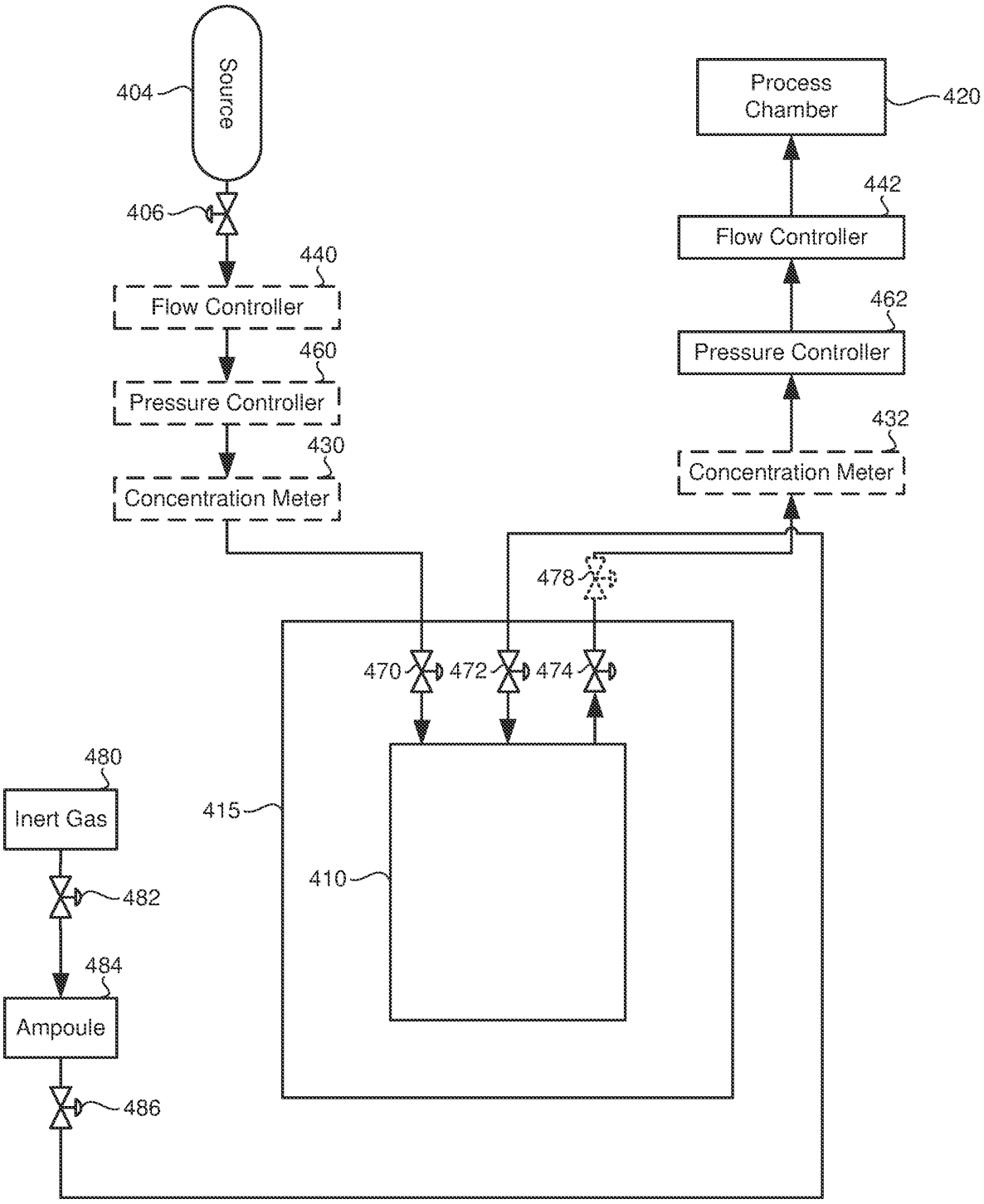
Source
404
406
440
Flow Controller
460
Pressure Controller
430
Concentration Meter
Process Chamber
420
442
Flow Controller
462
Pressure Controller
432
Concentration Meter
478
470
472
474
480
Inert Gas
482
484
Ampoule
486
415
410

FIG. 4C

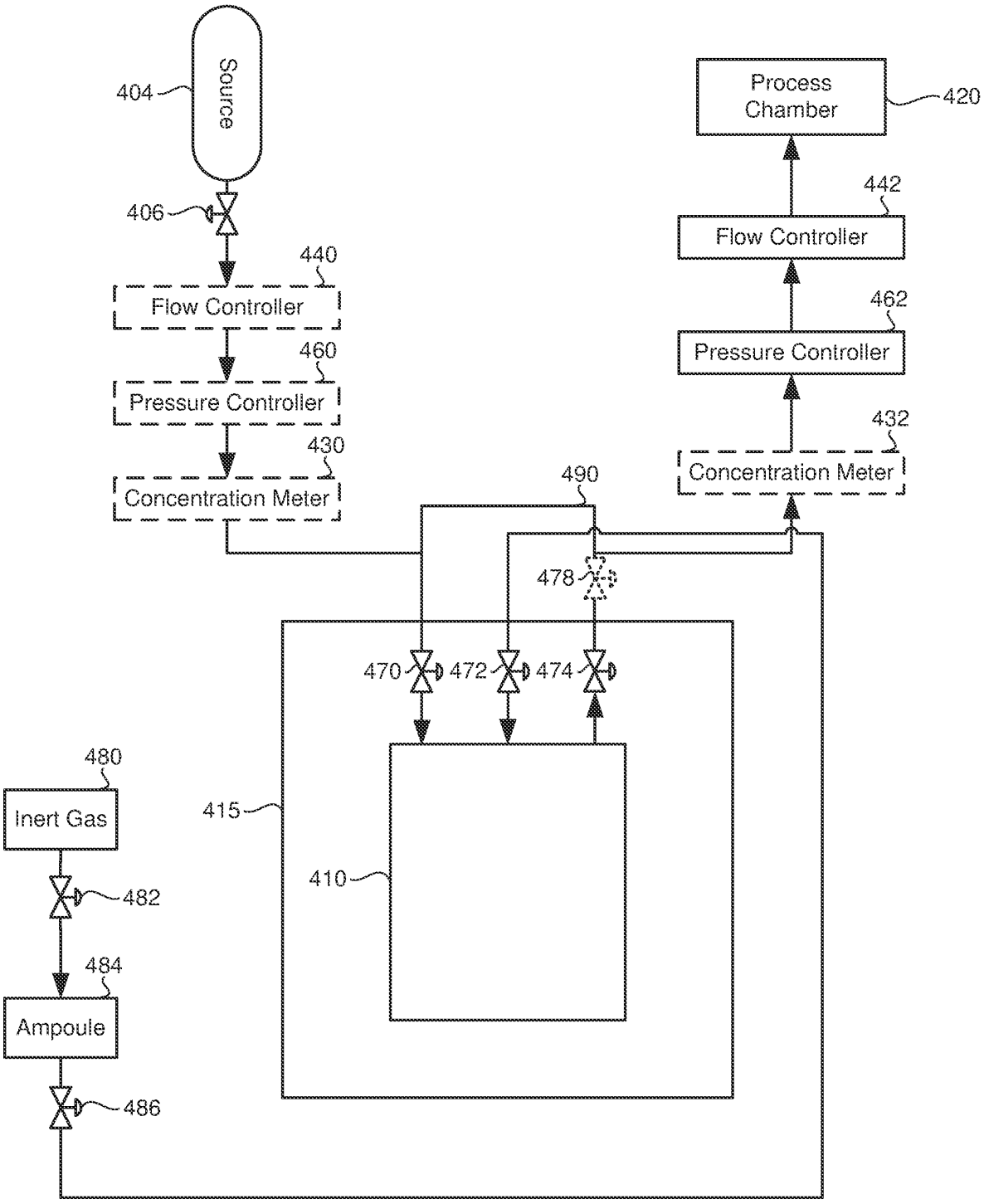
Source
404
406
440
Flow Controller
460
Pressure Controller
430
Concentration Meter
490
478
470
472
474
480
Inert Gas
482
484
Ampoule
486
415
410
Process Chamber
420
442
Flow Controller
462
Pressure Controller
432
Concentration Meter

FIG. 4D

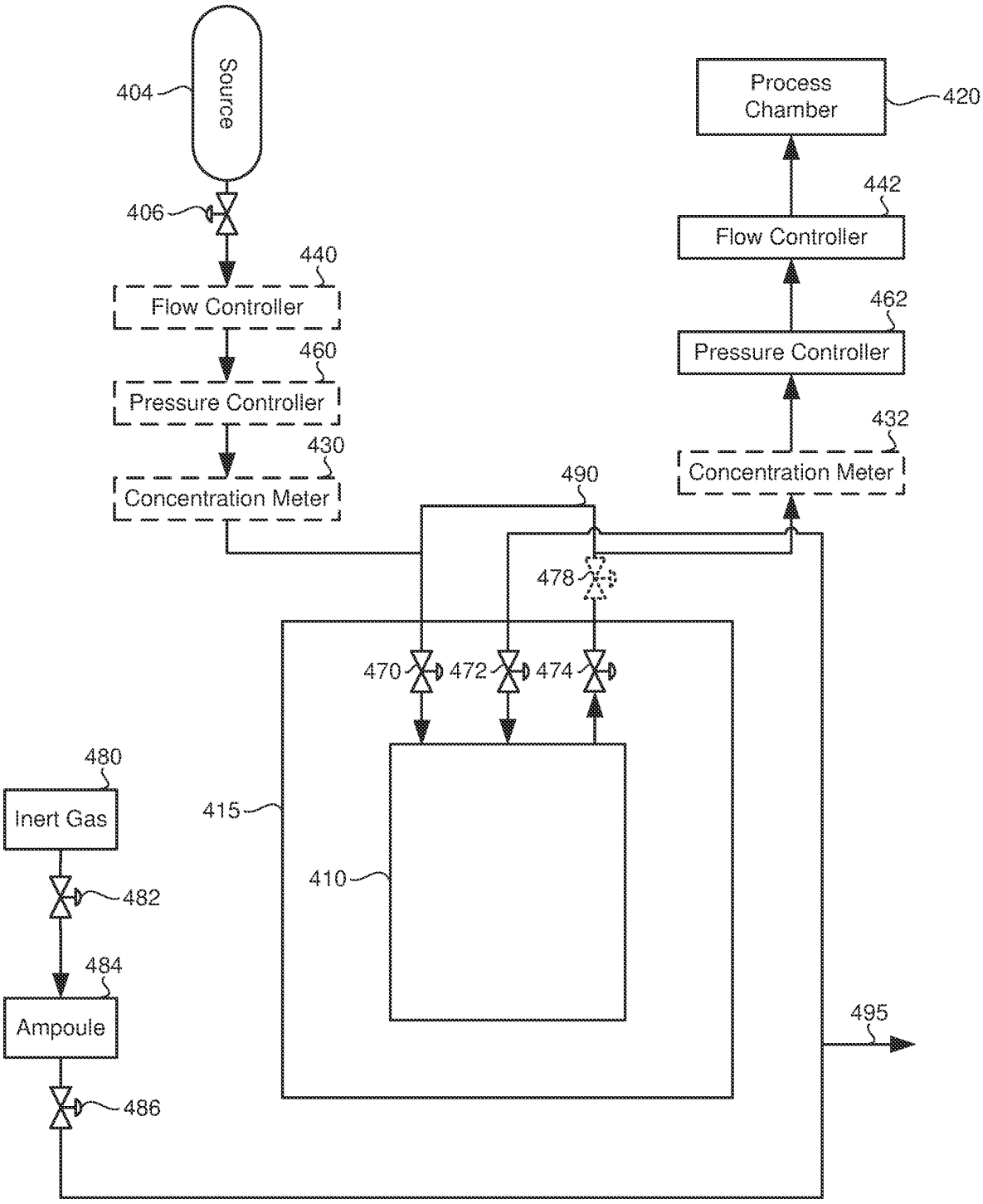
Source
404
406
440
Flow Controller
460
Pressure Controller
430
Concentration Meter
490
478
470
472
474
480
Inert Gas
482
484
Ampoule
486
415
410
Process Chamber
420
442
Flow Controller
462
Pressure Controller
432
Concentration Meter
495

FIG. 4E

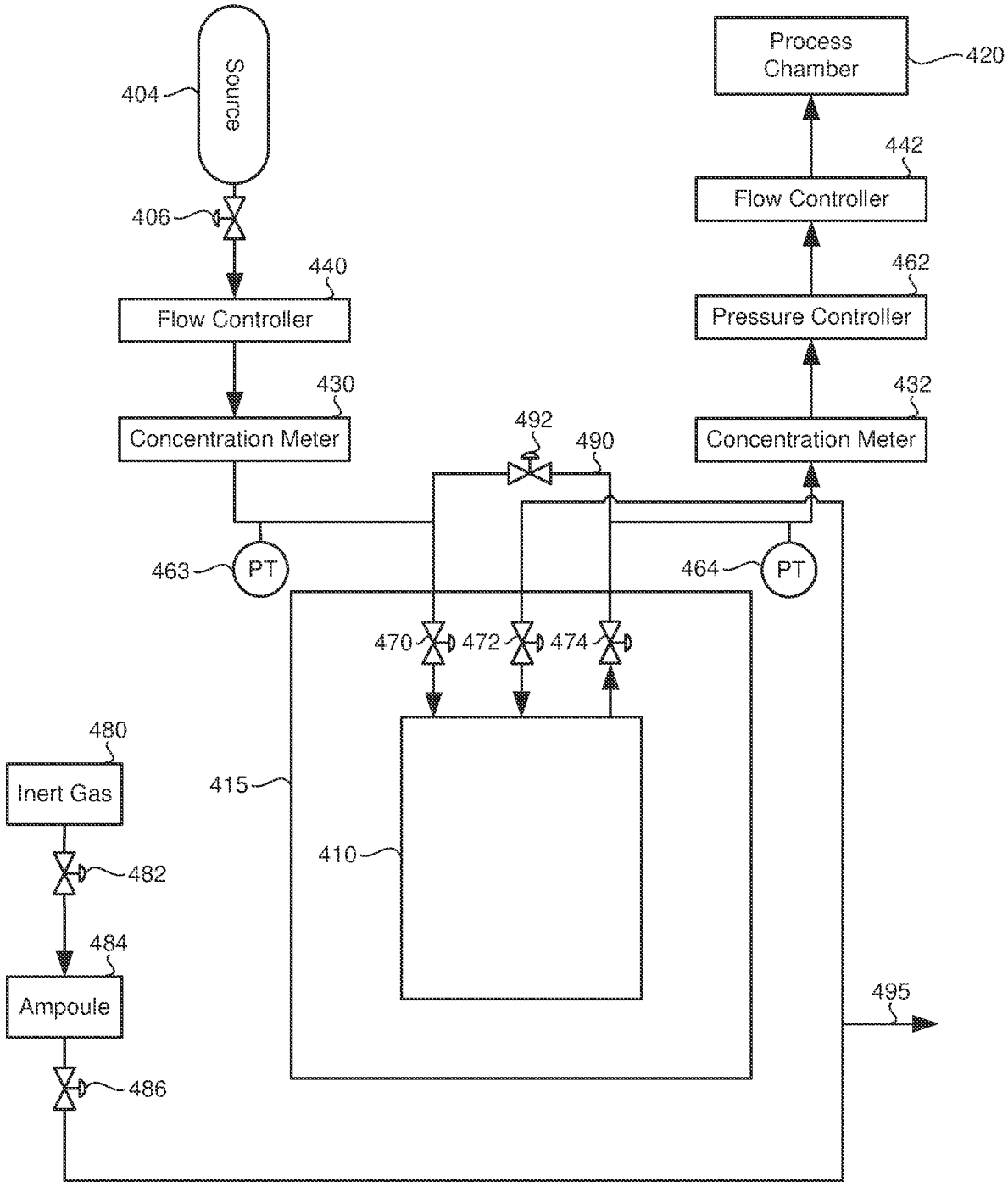
Source
404
406
440
Flow Controller
430
Concentration Meter
463
PT
492
490
470
472
474
480
Inert Gas
482
484
Ampoule
486
415
410
Process Chamber
420
442
Flow Controller
462
Pressure Controller
432
Concentration Meter
464
PT
495

FIG. 4F

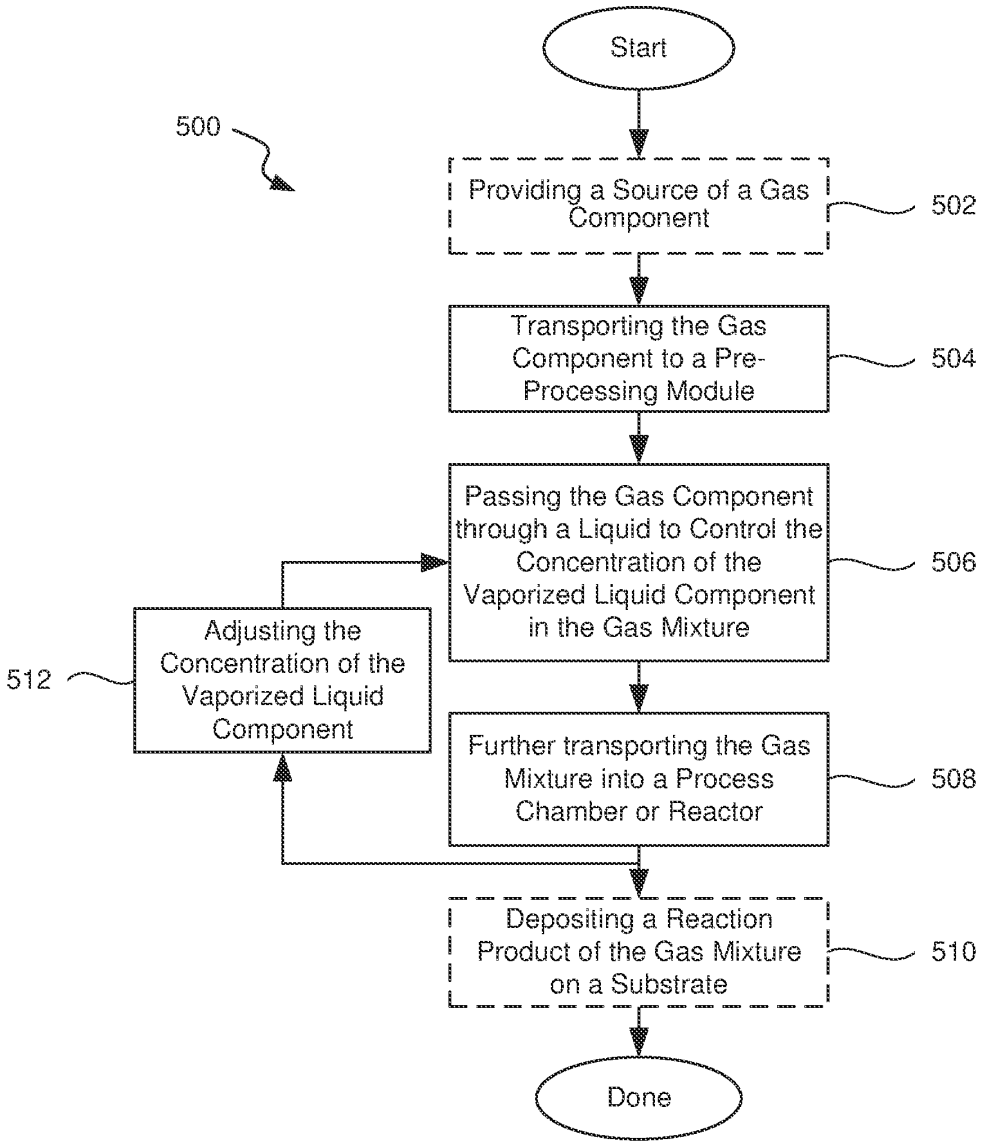
Start
500
Providing a Source of a Gas Component
502
Transporting the Gas Component to a Pre-Processing Module
504
Passing the Gas Component through a Liquid to Control the Concentration of the Vaporized Liquid Component in the Gas Mixture
506
Adjusting the Concentration of the Vaporized Liquid Component
512
Further transporting the Gas Mixture into a Process Chamber or Reactor
508
Depositing a Reaction Product of the Gas Mixture on a Substrate
510
Done

FIG. 5A

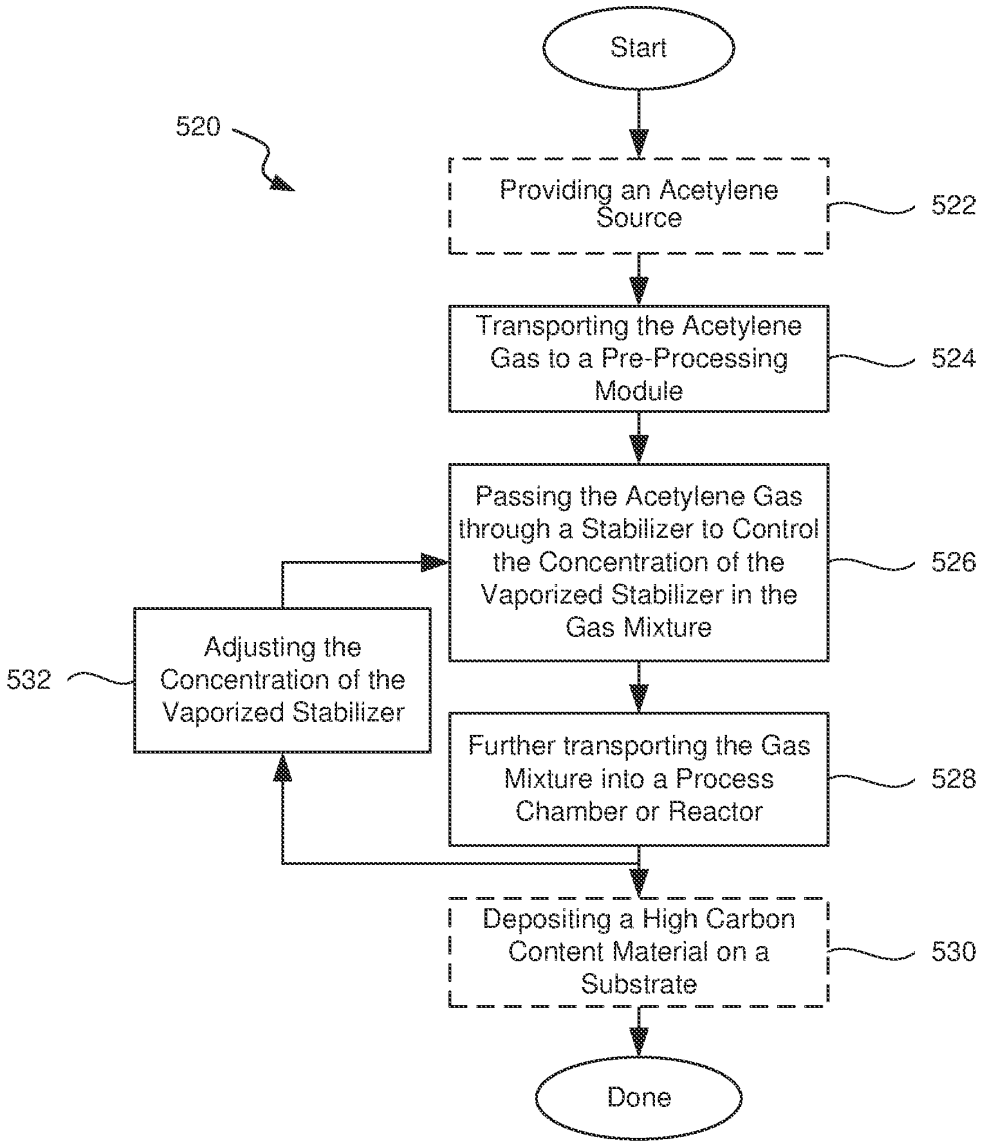
Start
520
Providing an Acetylene Source
522
Transporting the Acetylene Gas to a Pre-Processing Module
524
Passing the Acetylene Gas through a Stabilizer to Control the Concentration of the Vaporized Stabilizer in the Gas Mixture
526
Adjusting the Concentration of the Vaporized Stabilizer
532
Further transporting the Gas Mixture into a Process Chamber or Reactor
528
Depositing a High Carbon Content Material on a Substrate
530
Done

FIG. 5B

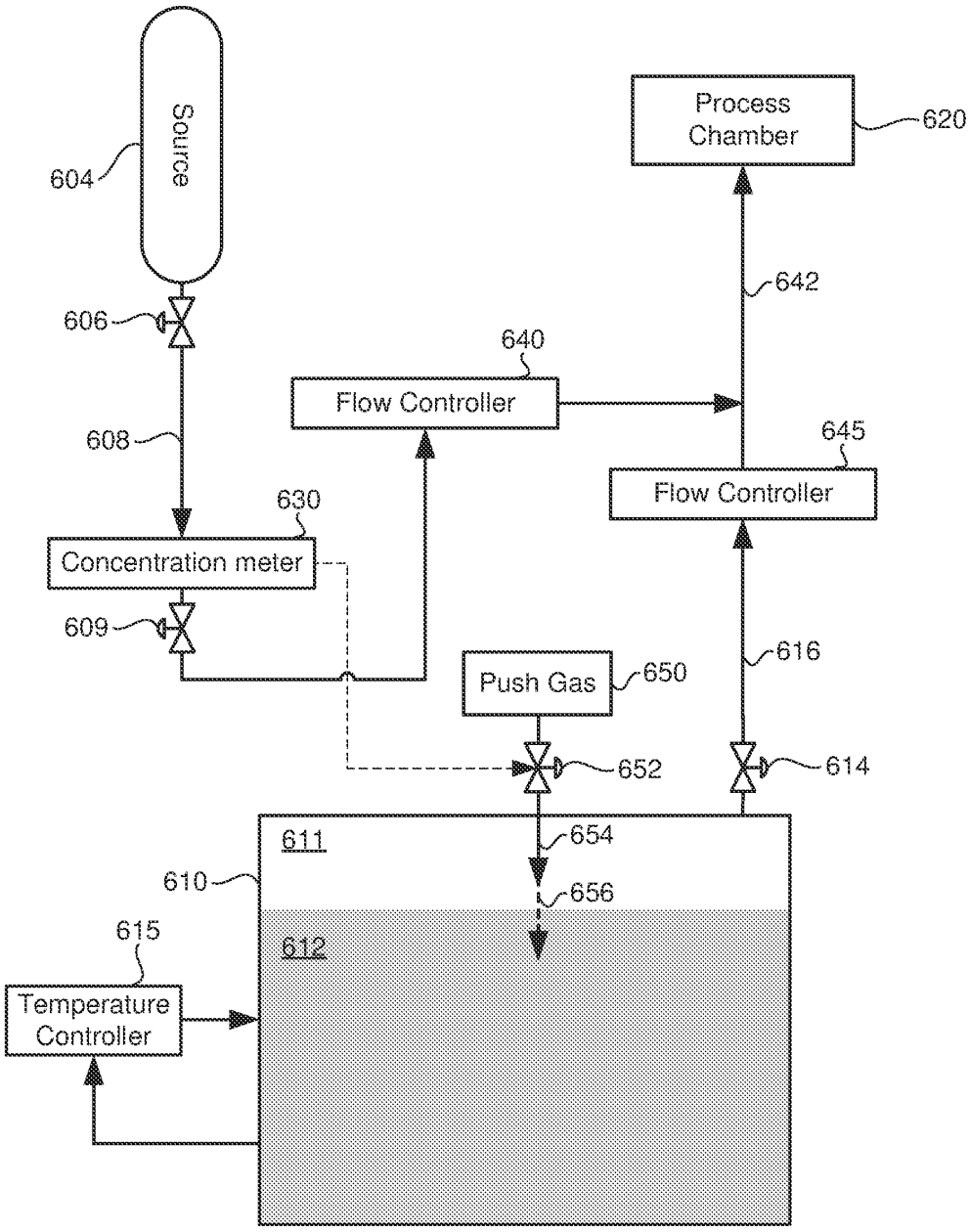
Source
604
606
608
630
Concentration meter
609
640
Flow Controller
Process Chamber
620
642
645
Flow Controller
616
614
Push Gas
650
652
654
656
611
610
612
615
Temperature Controller

FIG. 6

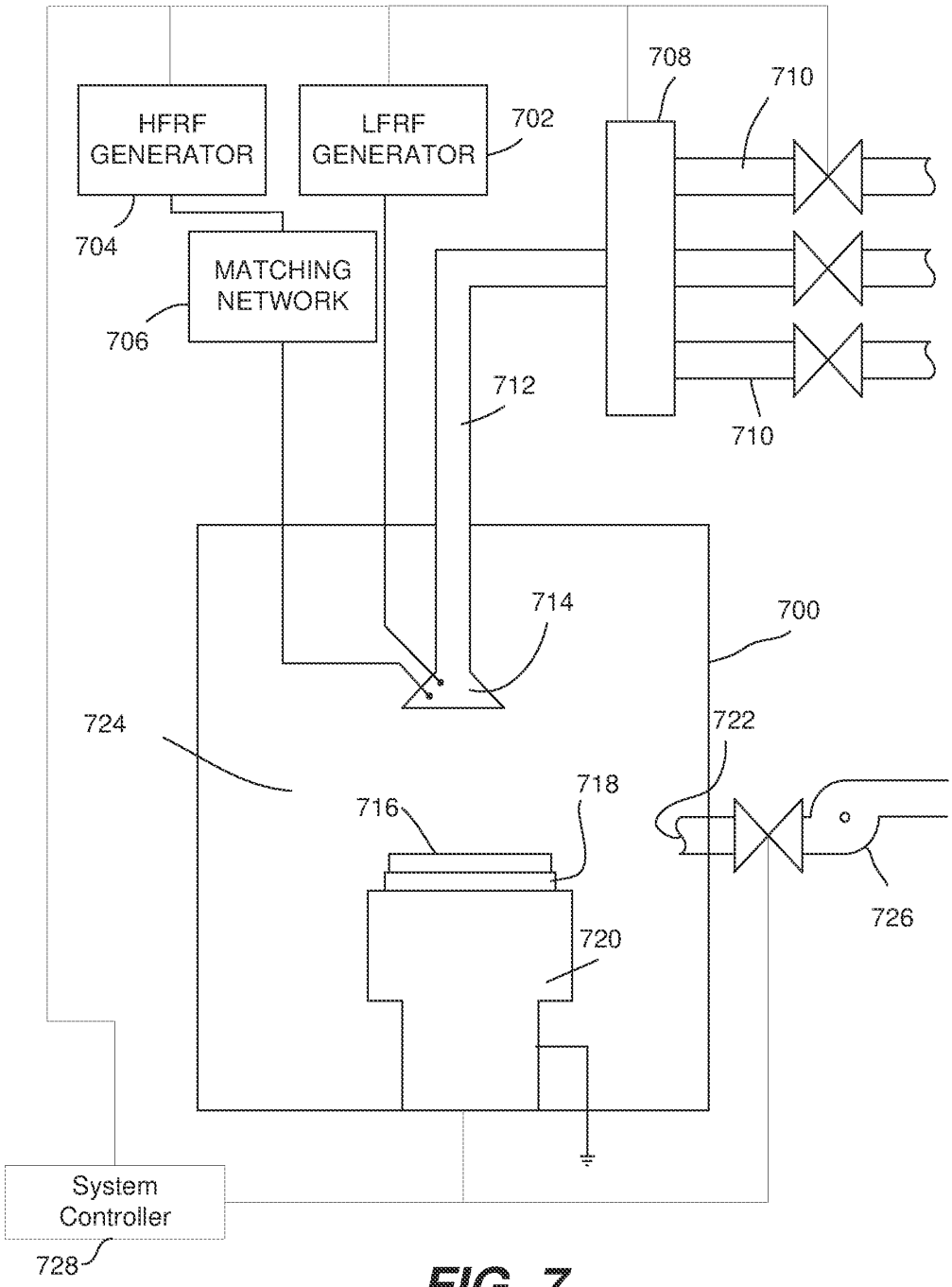
HFRF GENERATOR
LFRF GENERATOR
702
704
MATCHING NETWORK
706
708
710
710
712
714
700
724
722
718
716
720
726
System Controller
728

FIG. 7

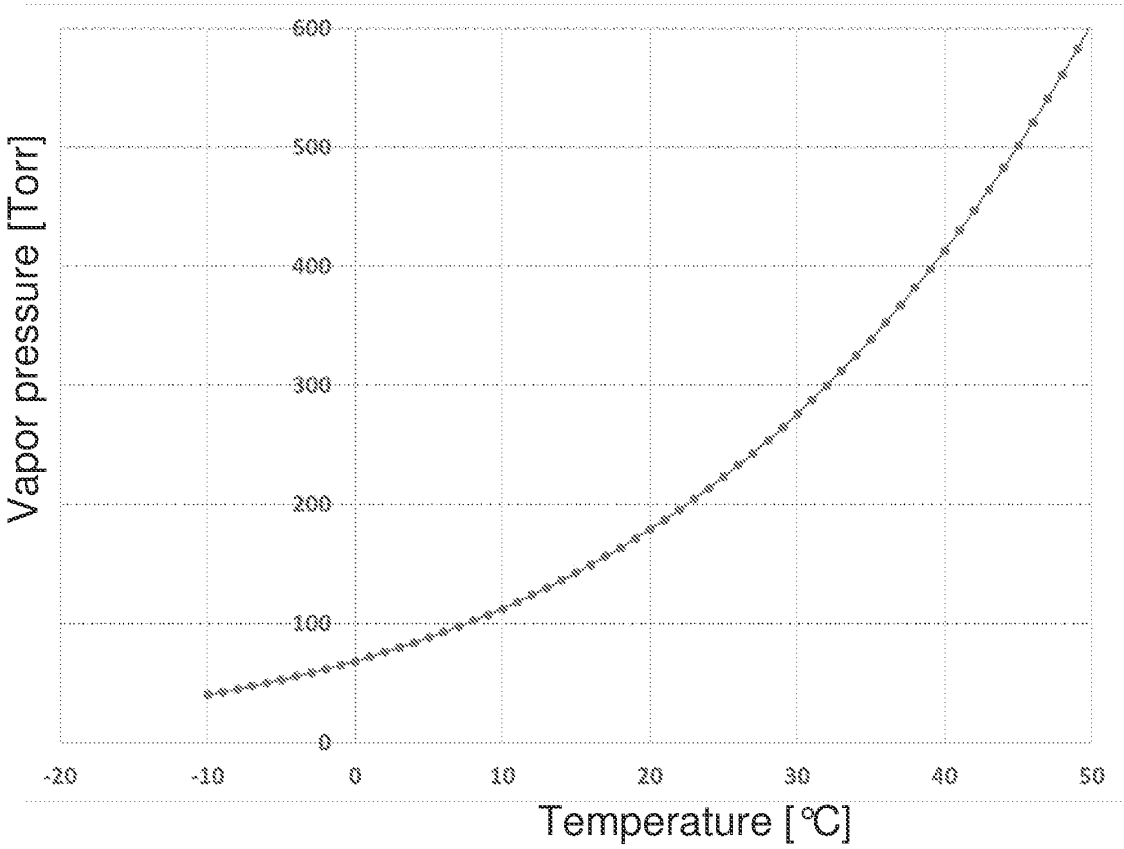
Vapor pressure [Torr]
600
500
400
300
200
100
0
-20
-10
0
10
20
30
40
50
Temperature [°C]

FIG. 8

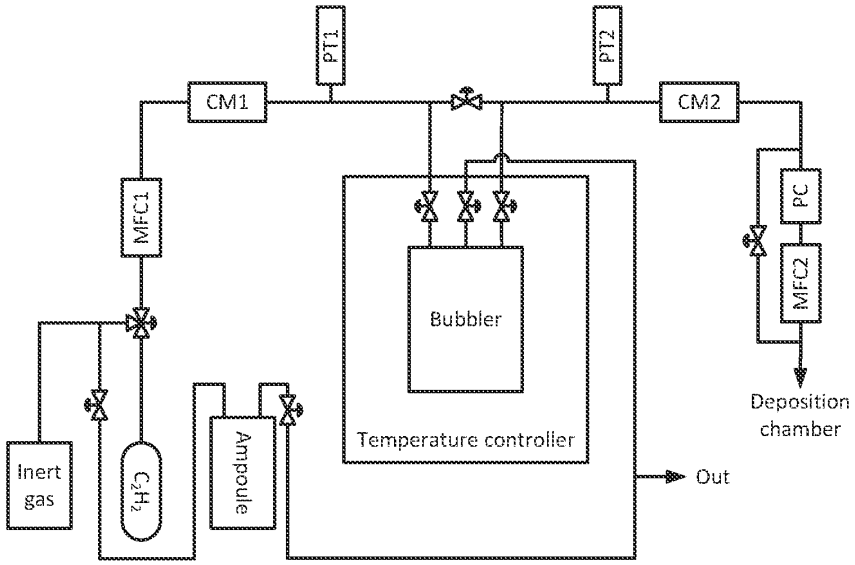
PT1
PT2
CM1
CM2
MFC1
PC
MFC2
Bubbler
Temperature controller
Deposition chamber
Inert gas
C_2H_2
Ampoule
Out

FIG. 9A

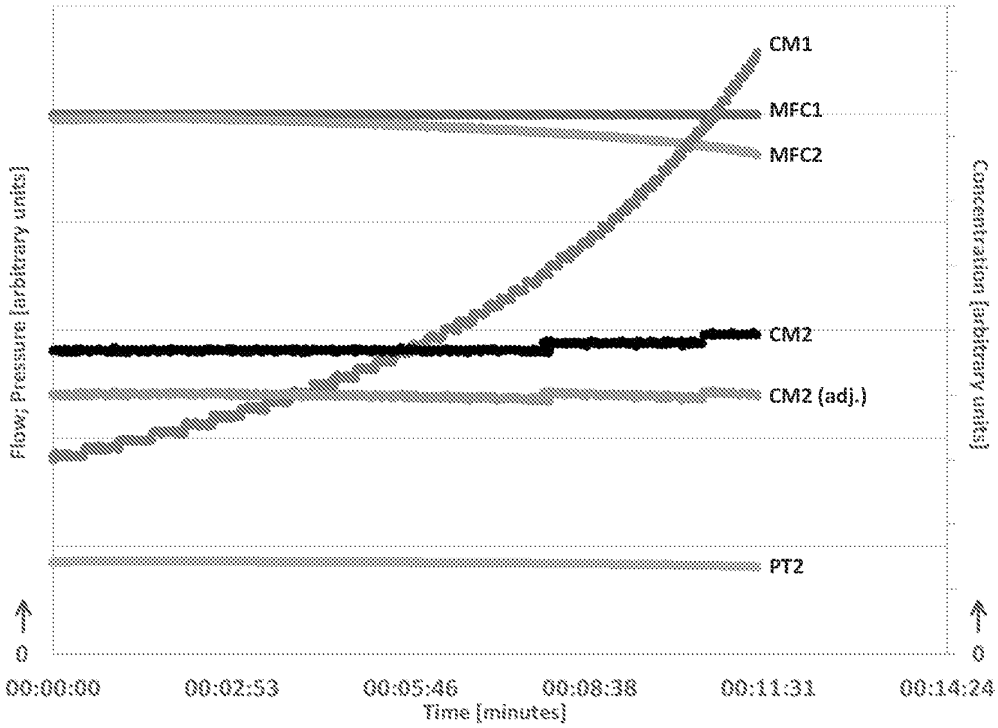
CM1
MFC1
MFC2
CM2
CM2 (adj.)
PT2
Flow; Pressure [arbitrary units]
Concentration [arbitrary units]
0
0
00:00:00
00:02:53
00:05:46
00:08:38
00:11:31
00:14:24
Time [minutes]

FIG. 9B

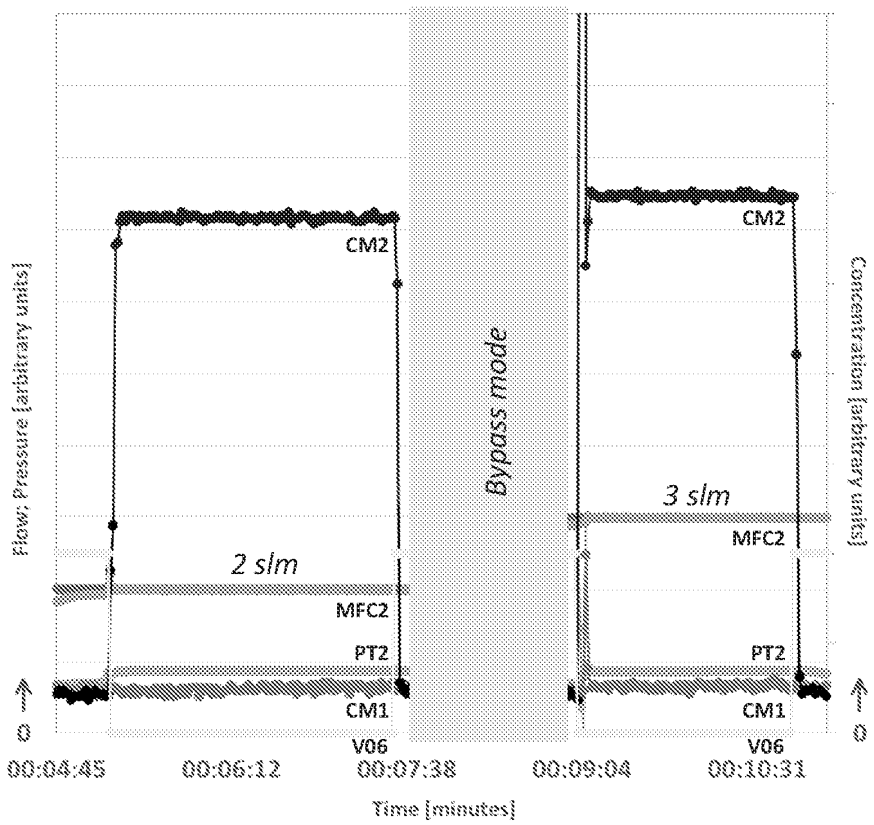
Flow; Pressure [arbitrary units]
Concentration [arbitrary units]
Bypass mode
CM2
2 slm
MFC2
PT2
CM1
V06
3 slm
0
00:04:45
00:06:12
00:07:38
00:09:04
00:10:31
Time [minutes]

FIG. 10A

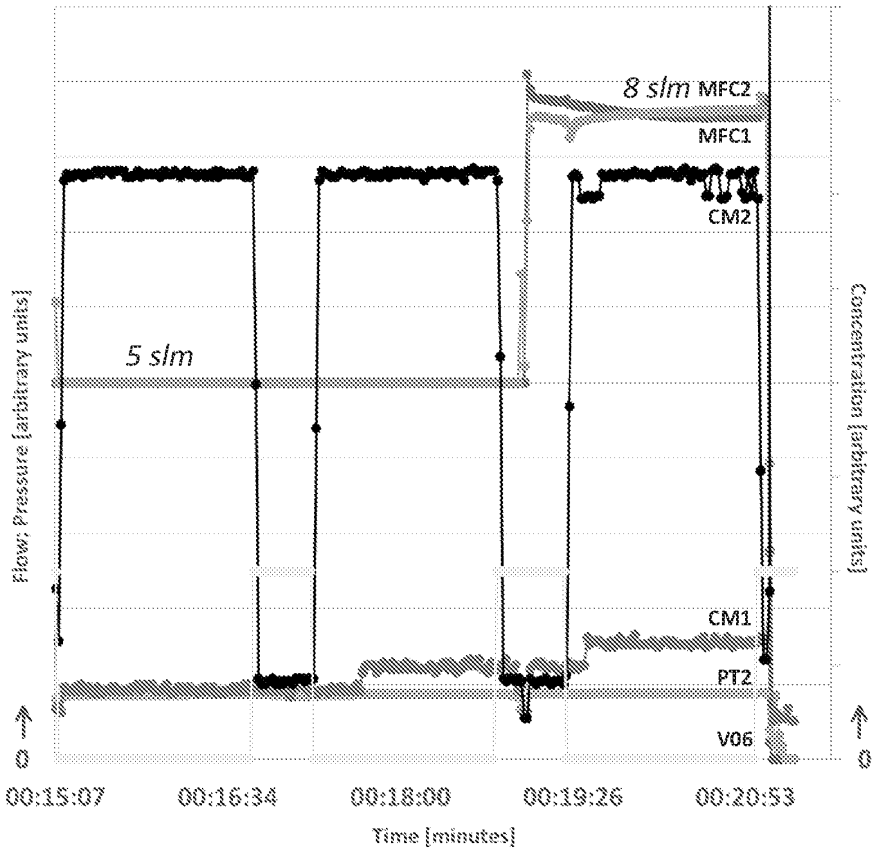
8 slm MFC2
MFC1
CM2
5 slm
CM1
PT2
V06
Flow; Pressure [arbitrary units]
Concentration [arbitrary units]
0
0
00:15:07
00:16:34
00:18:00
00:19:26
00:20:53
Time [minutes]

FIG. 10B