CLAIMS

1. An aqueous immunogenic composition which, after administration to a subject, is able to induce an immune response that is bactericidal against serogroups A, B, C, W135 and Y of *Neisseria meningitidis*, wherein the composition comprises:

   i. a conjugated serogroup A antigen;

   ii. a conjugated serogroup C antigen;

   iii. a conjugated serogroup W135 antigen;

   iv. a conjugated serogroup Y antigen; and

   v. one or more polypeptide antigens from serogroup B,

wherein (ii), (iii) and (iv) are capsular saccharide antigens, and wherein (i) is a synthetic analogue of a serogroup A capsular saccharide.

~~2. The composition of claim 1~~,

wherein the conjugated serogroup A antigen is an oligomer conjugate and comprises an oligomer of Formula (Ia) or (Ib):

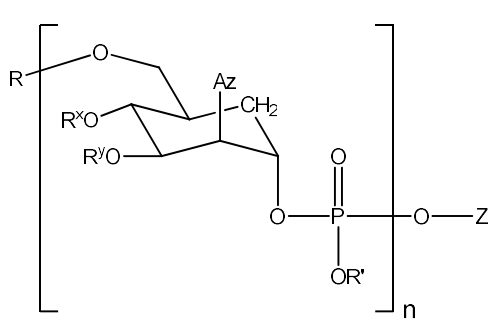

or

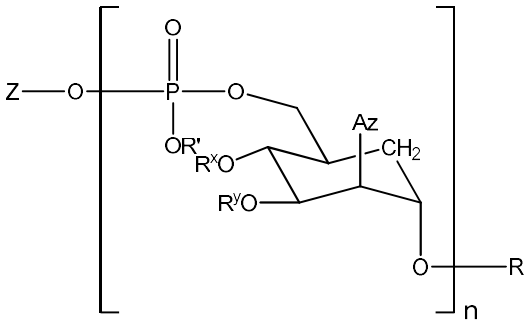

(Ia) (Ib)

wherein

n is ≥ 6;

R is H or -P(O)(OR")$_2$, wherein R" is H or a pharmaceutically acceptable phosphate counterion;

R' is H or a pharmaceutically acceptable phosphate counterion;

R^x is H or -C(O)CH_3 and may be the same or different in each repeat unit;

R^y is H or -C(O)CH_3 and may be the same or different in each repeat unit;

wherein at least one of R^x or R^y is $-C(O)CH_3$ in at least one repeat unit; and wherein in the oligomer Rx is -C(O)CH3 in at least one repeat unit;

Az is an aza substituent selected from the group consisting of $-NH(CO)R^1$, $-N(R^1)2$ and $-N_3$, wherein R^1 is independently selected from the group consisting of H, a linear or branched C_1-C_6-alkyl and a linear or branched C_1-C_6-haloalkyl, preferably wherein Az is $-NHC(O)CH_3$;

Z is (i) a protecting group,

(ii) a functional linker for conjugation to a protein,

or (iii) a linear or branched C_1-C_6 alkyl, optionally substituted phenyl, –C(O)Y, or a linear or branched C_1-C_6-alkyl-X,

wherein Y is H, a linear or branched C_1-C_6-alkyl or a protecting group, and

wherein X is $-NH_2$, $-N_3$, -C≡CH, $-CH=CH_2$, -SH or -S-C≡N.

~~3~~2. The composition of claim 1 ~~or 2~~,

wherein the conjugated serogroup A antigen is a conjugate of Formula (IIa) or (IIb), preferably of formula (IIa):

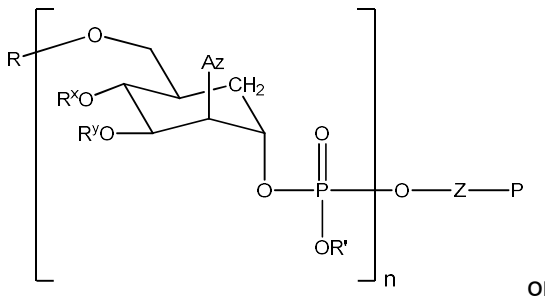

or

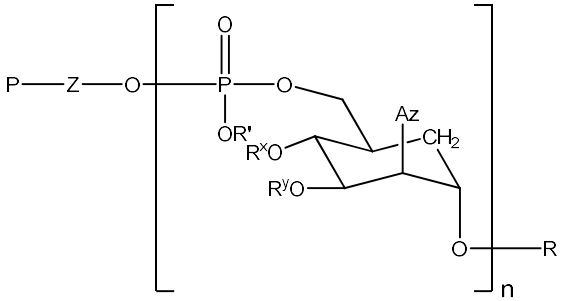

(IIa) (IIb)

~~Wherein~~ wherein in the oligomer n, R, R', R^x, R^y, Az are as defined in claim 1;

~~n is ≥6;~~

~~R is H or $-P(O)(OR")_2$, wherein R" is H or a pharmaceutically acceptable phosphate counterion;~~

~~R' is H or a pharmaceutically acceptable phosphate counterion;~~

~~R^x is H or $-C(O)CH_3$ and may be the same or different in each repeat unit;~~

~~R^y is H or -$C(O)CH_3$ and may be the same or different in each repeat unit;~~

~~wherein at least one of R^x or R^y is -$C(O)CH_3$ in at least one repeat unit;~~

~~Az is an aza substituent selected from the group consisting of -$NH(CO)R^1$, -$N(R^1)2$ and -N_3, wherein R^1 is independently selected from the group consisting of H, a linear or branched C_1-C_6-alkyl and a linear or branched C_1-C_6-haloalkyl;~~

Z is ~~(i)~~ a ~~-~~functional linker or a bond; and

P is a protein.

~~4. The composition of claim 2 or 3, wherein in the oligomer R^x is -$C(O)CH_3$ in at least one repeat unit.~~

~~5~~3. The composition of any one of claims 1~~2~~ to 2~~4~~, wherein in the oligomer n is 6 to 30~~.~~

~~6. The composition of any one of claims 2 to 4, wherein in the oligomer n is 8 to 20.~~

~~7. The composition of any one of claims 2 to 4, wherein in the oligomer n is 8 to 15.~~

~~8. The composition of any one of claims 2 to 4, wherein in the oligomer n is 8 or 10.~~

~~9. The composition according to any one of claims 2 to 8, wherein in the oligomer Az is -$NHC(O)CH_3$.~~

~~10~~4. The composition according to any one of claims ~~2~~ 1 to ~~9~~3, wherein in the oligomer

(i) both of R^x and R^y are -$C(O)CH_3$ in at least one same repeat unit~~.~~

~~11. The composition according to any one of claims 2 to 10,~~

~~wherein in the oligomer~~ (ii) R^x is H and R^y is -$C(O)CH_3$ in at least one same repeat unit~~.~~

~~12. The composition according to any one of claims 2 to 11,~~

~~wherein in the oligomer~~ (iii) R^x is -$C(O)CH_3$ and R^y is H in at least one same repeat unit~~.~~

~~13. The composition according to any one of claims 2 to 12,~~

~~wherein in the oligomer~~ (iv) R^x and R^y are both -$C(O)CH_3$ in at least one same repeat unit~~.~~

~~14. The composition according to any one of claims 2 to 13,~~

~~wherein in the oligomer~~ (v) R^x is H and R^y is -$C(O)CH_3$ in at least one same repeat unit and R^x is -$C(O)CH_3$ and R^y is H in at least one same repeat unit~~.~~

~~15. The composition according to any one of claims 2 to 14, wherein in the oligomer~~

(vi) R^x is H and R^y is $-C(O)CH_3$ in at least one same repeat unit, R^x is $-C(O)CH_3$ and R^y is H in at least one same repeat unit and R^x and R^y are both $-C(O)CH_3$ in at least one same repeat unit

~~16. The composition according to any one of claims 2 to 15, wherein~~

(vii) both of R^x and R^y are $-C(O)CH_3$ in 40 to 50% of the repeat units of the oligomer~~.~~

~~17. The composition according to claim 16~~, optionally wherein in 10 to 20% of the remaining repeat units of the oligomer one of R^x or R^y is $-C(O)CH_3$, the rest of the repeat units in the oligomer having $R^x = R^y = H$~~,~~

(viii)~~18. The composition according to any one of claims 2 to 17, wherein~~ about 50 to 90% of R^x and R^y in the oligomer is $-C(O)CH_3$~~,~~

~~19. The composition according to any one of claims 2 to 18,~~ ~~wherein~~ and/or

(ix) R^x in each repeat unit is H and at least 80% of R^y in the oligomer is $-C(O)CH_3$.

~~20~~5. The composition according to any one of claims 1~~2~~ to 4~~19~~, wherein P is an inactivated bacterial toxin selected from diphtheria toxoid (DT), tetanus toxoid (TT), CRM_{197}, E. coli ST and Pseudomonas aeruginosa exotoxin (rEPA), or P is a polyamino acid such as poly(lysine:glutamic acid) or P is hepatitis B virus core protein or SPR96-2021~~.~~

~~21. The composition of any one of claims 2 to 20~~, preferably wherein P is CRM_{197}.

~~22~~6. The composition of any one of claims 1~~2~~ to ~~21~~5, wherein Z is a linker having the following formula:

$$*–(CH_2)_p\text{-}NH(CO)\text{-}(CH_2)_p\text{-}(X\text{-}(CH_2)_p)_p\text{-}C(O)\text{-}*$$

wherein * represents the point of attachment, and wherein

p is independently selected from 1 to 10; and

X is selected from -O-, -S- and -NH-~~.~~

~~23. The composition of any one of claims 2 to 21~~or~~,~~ wherein Z is a linker having the following formula:

$$*\text{-}(CH_2)_m\text{-}NHC(O)\text{-}(CH_2)_m\text{-}C(O)\text{-}*$$

wherein m is independently selected from 1 to 10.

~~24~~7. The composition according to any one of claims ~~2~~ 1 to ~~23~~6, wherein the oligomer conjugate has the following structure:

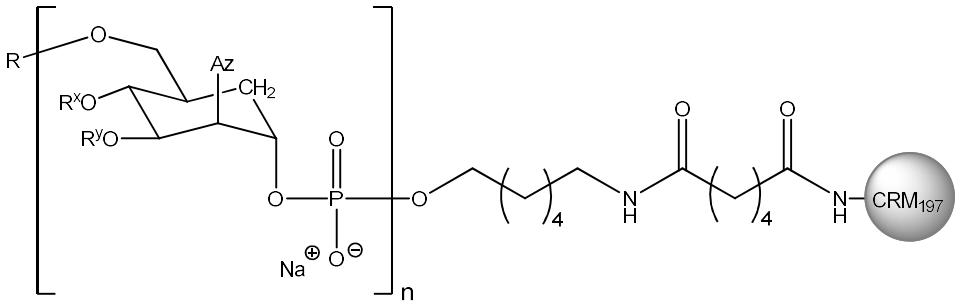

wherein n, Az, R, R^x and R^y are as defined in any one of claims ~~2~~ 1 to ~~19~~4.

~~25~~8. The composition according to any one of the preceding claims, wherein the conjugated serogroup C, W135 and Y antigens are conjugated to a carrier protein selected from diptheria toxoid, tetanus toxoid, *H. influenzae* protein D and $CRM_{197,}$ ~~-~~

~~26. The composition according to claim 25~~, preferably wherein the serogroup C, W135 and Y antigens are conjugated to CRM_{197}.

~~27~~9. The composition according to any one of the preceding claims, wherein the one or more polypeptide antigens from serogroup B includes one or more of a meningococcal NHBA antigen, a meningococcal NadA antigen, a meningococcal fHbp antigen, and meningococcal outer membrane vesicles (OMVs).

~~28~~10. The composition according to claim ~~27~~9, comprising a mutant v1.13 meningococcal fHbp polypeptide comprising an amino acid sequence having at least 80% sequence identity to SEQ ID NO: 2 ~~wherein the amino acid sequence includes a substitution mutation at one or more of residues S216, E211 or E232 of SEQ ID NO: 2.~~

~~29. The composition according to claim 28, wherein the amino acid sequence differs from SEQ ID NO: 2 by at least one or more of the substitutions S216R, E211A and E232A.~~

~~30. The composition according to claim 29~~, wherein the amino acid sequence comprises substitutions at ~~multiple~~ residues ~~selected from the following:~~

E211A and S216R~~, and~~

~~E211A and E232A.~~

~~31. The composition according to any of claims 28 to 30~~, preferably wherein the v1.13 meningococcal fHbp polypeptide has the amino acid sequence of ~~SEQ ID NO: 3 or~~ SEQ ID NO: 4.

~~32~~11. The composition according to claim ~~27~~9, comprising a ~~-~~fusion polypeptide comprising v1, v2 and v3 meningococcal fHbp polypeptides in the order v2-v3-v1 from N- to C-terminus, and wherein the v1 fHbp polypeptide is a mutant v1.13 fHbp polypeptide as defined in ~~any of~~ claim~~s~~ ~~28 to 31~~10~~.~~

~~33. The composition according to claim 32~~, preferably wherein:

(a) the v2 fHbp polypeptide is a mutant v2 fHbp polypeptide comprising an amino acid sequence having at least 80% sequence identity to SEQ ID NO: 12, wherein the v2 fHbp amino acid sequence includes a substitution mutation at residues S32 and L123 of SEQ ID NO:12, and wherein the substitutions are S32V and L123R; and

(b) the v3 fHbp polypeptide is a mutant v3 fHbp polypeptide comprising an amino acid sequence having at least 80% sequence identity to SEQ ID NO: 15 wherein the v3 fHbp amino acid sequence includes a substitution mutation at residues S32 and L126 of SEQ ID NO: 15, and wherein the substitutions are S32V and L126R.

~~34. The composition according to claim 33, wherein:~~

~~(a) the v2 fHbp polypeptide comprises or consists of the amino acid sequence of SEQ ID NO: 16; and/or~~

~~(b) the v3 fHbp polypeptide comprises or consists of the amino acid sequence of SEQ ID NO: 17.~~

~~35. The composition according to any of claims 32 to 34, wherein the v2 and v3 fHbp amino acid sequences and the v3 and v1 fHbp amino acid sequences are connected by a glycine-serine linker, and preferably wherein the v2 sequence has an N-terminal leader sequence corresponding to SEQ ID NO: 18.~~

~~36~~12. The composition according to ~~any of~~ claim~~s~~ ~~32~~ 11~~to 35~~, wherein the fHbp fusion polypeptide comprises the amino acid sequence of ~~any of~~ SEQ ID NO~~S~~: 19~~-23~~.

~~37. The composition according to claim 36, wherein the fHbp fusion polypeptide additionally comprises the optional N-terminal amino acid sequence of SEQ ID NO: 34.~~

~~38. The composition according to claim 36, wherein the fHbp fusion polypeptide has the sequence of SEQ ID NO. 35.~~

~~39~~13. The composition according to any of claims ~~28~~ 10 to ~~36~~12, wherein the composition further comprises a meningococcal NHBA antigen, a meningococcal NadA antigen, a meningococcal fHbp antigen, and meningococcal outer membrane vesicles (OMVs).

~~40~~14. The composition according to any of the preceding claims, further comprising an adjuvant.

~~41. The composition according to claim 40~~, preferably wherein the adjuvant is aluminium hydroxide.

~~42. The composition according to any of the preceding claims, wherein the composition comprises BEXSERO.~~

~~43~~15. The composition according to any of the preceding claims, packaged in a single hermetically sealed container, preferably a vial or syringe.

~~44. A method for raising an immune response in a mammal, comprising administering an immunogenic composition according to any of claims 1 to 43, optionally wherein the mammal is a human.~~

~~45. A method for the treatment or prevention of infection and/or disease caused by *N. meningitidis* in a mammal in need thereof comprising administering said mammal an immunologically effective amount of the composition according to any of claims 1 to 43, optionally wherein the mammal is a human.~~

~~46~~16. The immunogenic composition according to any of claims 1 to ~~43~~ 15 for use in medicine.

~~47~~17. The immunogenic composition according to any of claims 1 to ~~43~~ 15 for use as a vaccine.

~~48. The immunogenic composition according to any of claims 1 to 43 for use in a method of raising an immune response in a mammal, optionally wherein the mammal is a human.~~

~~49~~18. The composition according to any of claims 1 to ~~43~~15, for use in immunizing a mammal against *N. meningitidis* infection, optionally wherein the mammal is a human.

~~50. Use of a composition as defined in any of claims 1-43 in the manufacture of a medicament for use in the treatment or prevention of infection and/or disease caused by *N. meningitidis*.~~