[DRAWINGS]

[FIG. 1]

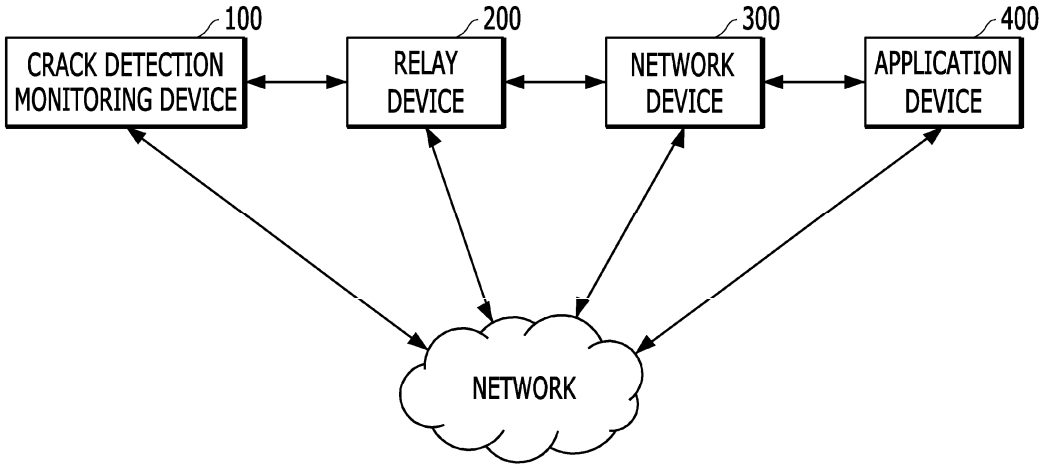

[FIG. 2]

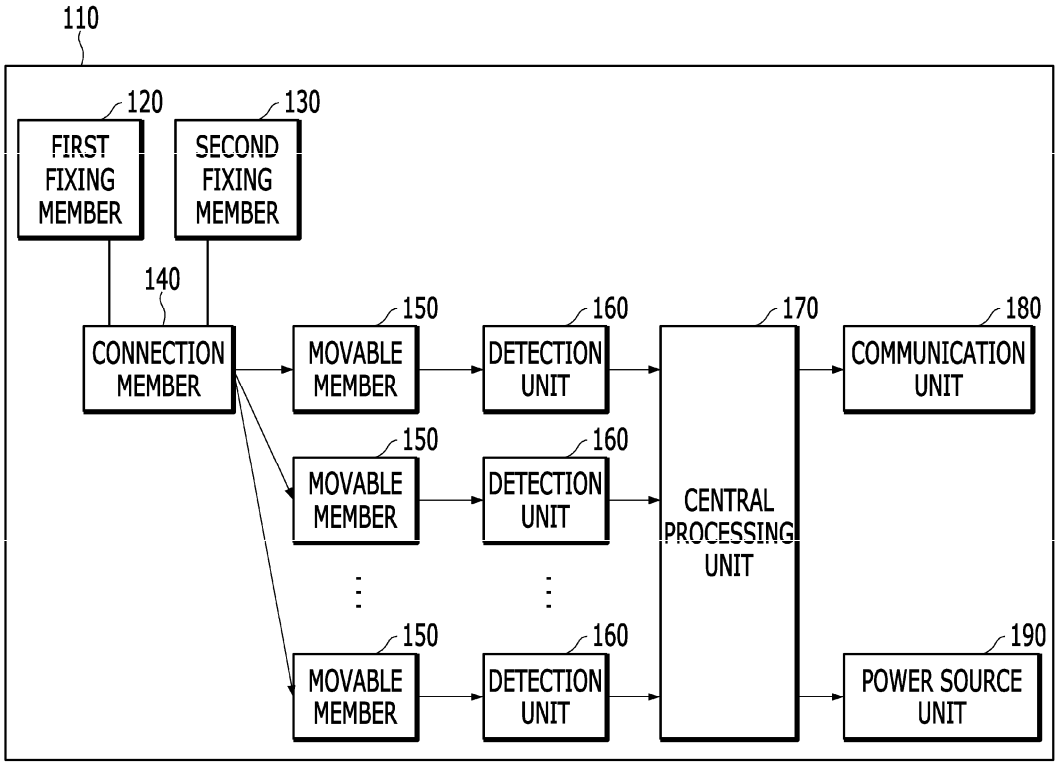
110
120
FIRST FIXING MEMBER
130
SECOND FIXING MEMBER
140
CONNECTION MEMBER
150
MOVABLE MEMBER
160
DETECTION UNIT
150
MOVABLE MEMBER
160
DETECTION UNIT
150
MOVABLE MEMBER
160
DETECTION UNIT
170
CENTRAL PROCESSING UNIT
180
COMMUNICATION UNIT
190
POWER SOURCE UNIT

[FIG. 3]

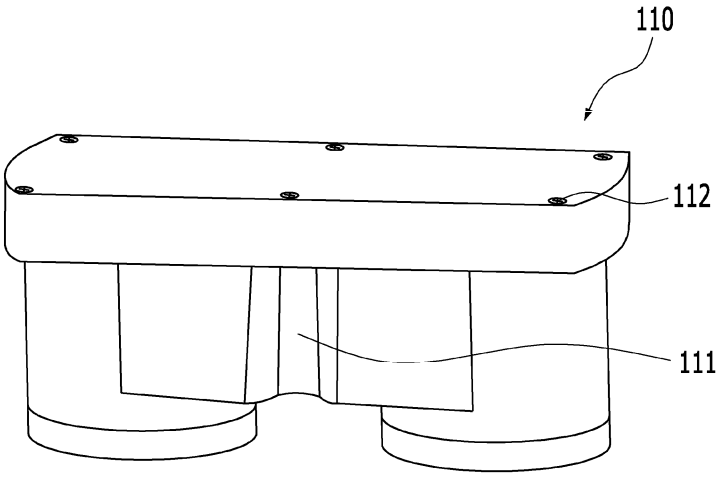

[FIG. 4]

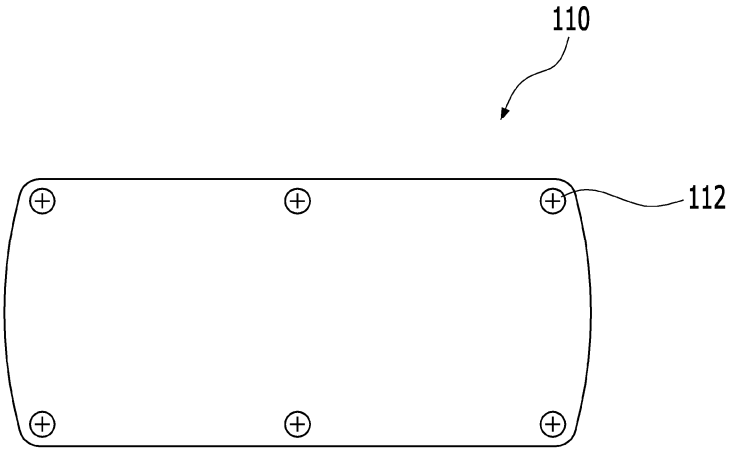

[FIG. 5]

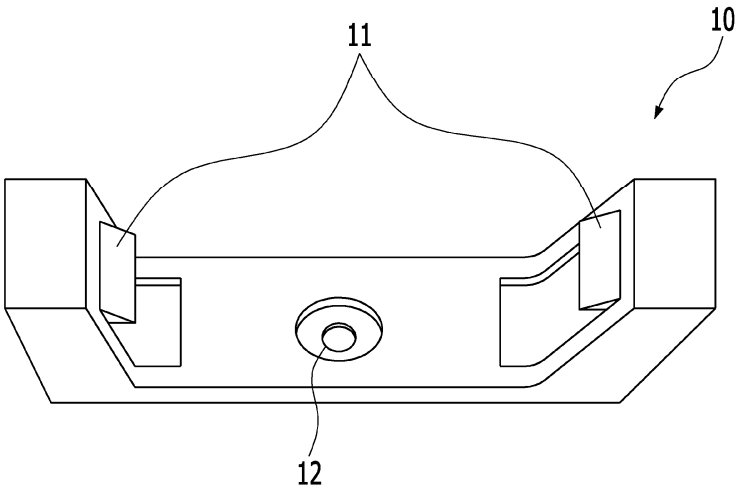

[FIG. 6]

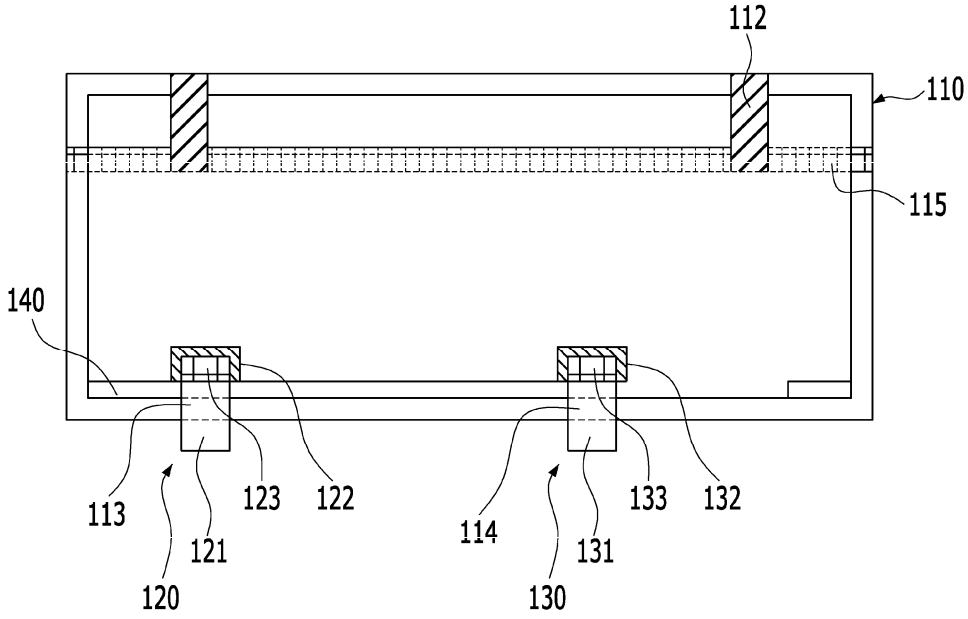

[FIG. 7]

