(12) INTERNATIONAL APPLICATION PUBLISHED UNDER THE PATENT COOPERATION TREATY (PCT)

(19) World Intellectual Property Organization
International Bureau

(43) International Publication Date
27 November 2003 (27.11.2003)

PCT

(10) International Publication Number
WO 03/097274 A2

(51) International Patent Classification[7]: B22D 13/04, 19/00

(21) International Application Number: PCT/BR03/00064

(22) International Filing Date: 15 May 2003 (15.05.2003)

(25) Filing Language: English

(26) Publication Language: English

(30) Priority Data:
PI 0202033-5 17 May 2002 (17.05.2002) BR

(71) Applicant *(for all designated States except US)*: **EMPRESA BRASILEIRA DE COMPRESSORES S/A EMBRACO** [BR/BR]; Rua Rui Barbosa, 1020, 89219-901 JOINVILLE - SC (BR).

(72) Inventor; and

(75) Inventor/Applicant *(for US only)*: **RAMIREZ, Rivio, Arturo** [BR/BR]; Rua Jacob Eisenhut, 400 - Apt. 1102, 89203-070 JOINVILLE - SC (BR).

(74) Agents: **ARNAUD, Antonio, M.P** et al.; Rua José Bonifácio, 93 - 9th floor, 01003-901 São Paulo - SP (BR).

(81) Designated States *(national)*: AE, AG, AL, AM, AT, AU, AZ, BA, BB, BG, BY, BZ, CA, CH, CN, CO, CR, CU, CZ, DE, DK, DM, DZ, EC, EE, ES, FI, GB, GD, GE, GH, GM, HR, HU, ID, IL, IN, IS, JP, KE, KG, KP, KR, KZ, LC, LK, LR, LS, LT, LU, LV, MA, MD, MG, MK, MN, MW, MX, MZ, NI, NO, NZ, OM, PH, PL, PT, RO, RU, SC, SD, SE, SG, SK, SL, TJ, TM, TN, TR, TT, TZ, UA, UG, US, UZ, VC, VN, YU, ZA, ZM, ZW.

(84) Designated States *(regional)*: ARIPO patent (GH, GM, KE, LS, MW, MZ, SD, SL, SZ, TZ, UG, ZM, ZW), Eurasian patent (AM, AZ, BY, KG, KZ, MD, RU, TJ, TM), European patent (AT, BE, BG, CH, CY, CZ, DE, DK, EE, ES, FI, FR, GB, GR, HU, IE, IT, LU, MC, NL, PT, RO,

[Continued on next page]

(54) Title: CENTRIFUGATION INJECTION MOLD

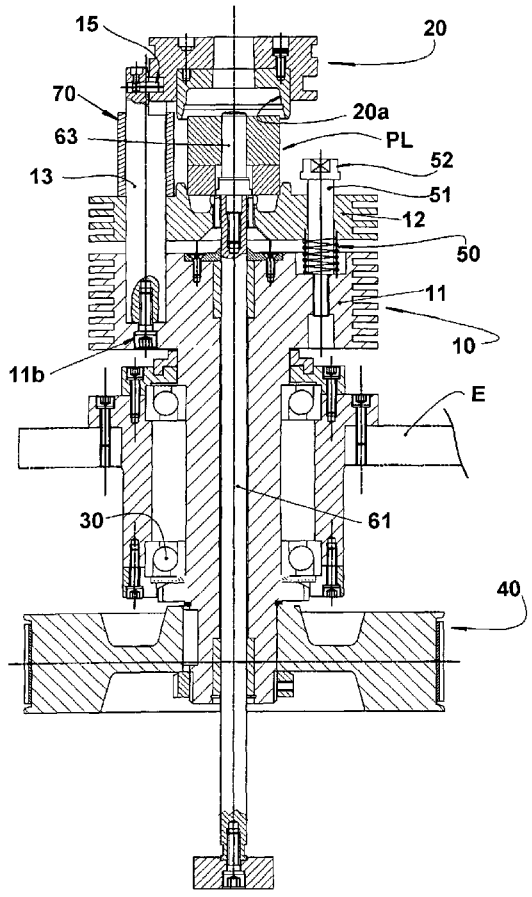

(57) Abstract: A centrifugation injection mold comprising: a lower mold portion (10) having a basic block (11) inferiorly and rotatively mounted to bearing means (30) that are affixed to a machine structure (E), a plurality of axial columns (13) peripherally and superiorly affixed to the basic block (11), and a moveable block (12) defining a lower mold cavity (12a) and being slidingly mounted to the axial columns (13), in order to be axially displaced between an open mold position and a closed mold position; an impelling means (60) operatively associated with the machine structure (E) and with the moveable block (12) for displacing displace the moveable block (12) to the open mold position against the action of an elastic means (50); a locking means (15) mounted to each axial column (13); and an upper mold portion (20) to be removably seated on the axial columns (13) and affixed thereto by the locking means (15) in a closed mold position.

WO 03/097274 A2

SE, SI, SK, TR), OAPI patent (BF, BJ, CF, CG, CI, CM, GA, GN, GQ, GW, ML, MR, NE, SN, TD, TG).

Published:

— *without international search report and to be republished upon receipt of that report*

For two-letter codes and other abbreviations, refer to the "Guidance Notes on Codes and Abbreviations" appearing at the beginning of each regular issue of the PCT Gazette.