Figur 1

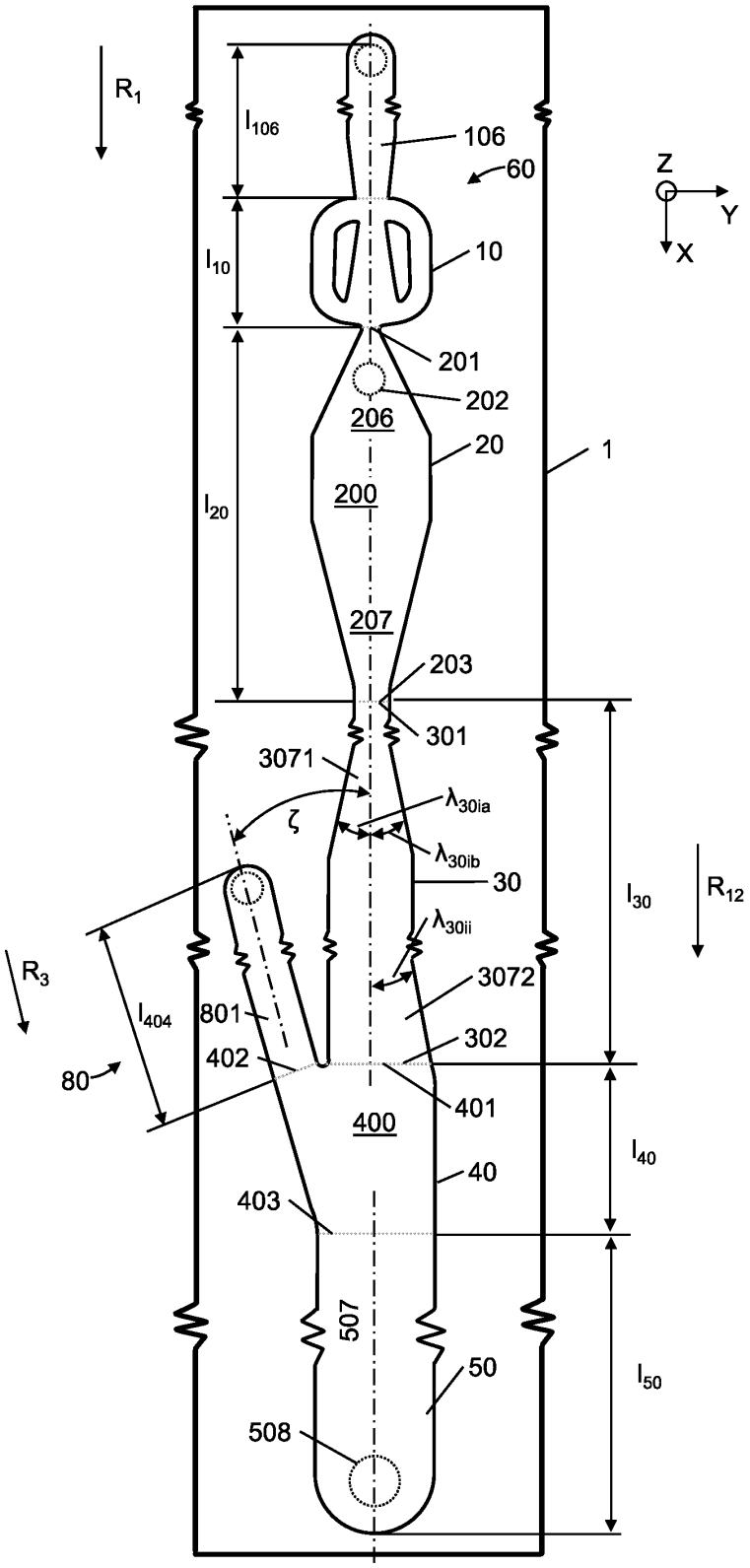
R1
l106
106
60
Z
Y
X
l10
10
201
202
206
20
1
l20
200
207
203
301
3071
λ30ia
ζ
λ30ib
30
l30
R12
λ30ii
R3
3072
l404
801
302
402
80
401
400
l40
40
403
507
50
l50
508

Figur 2

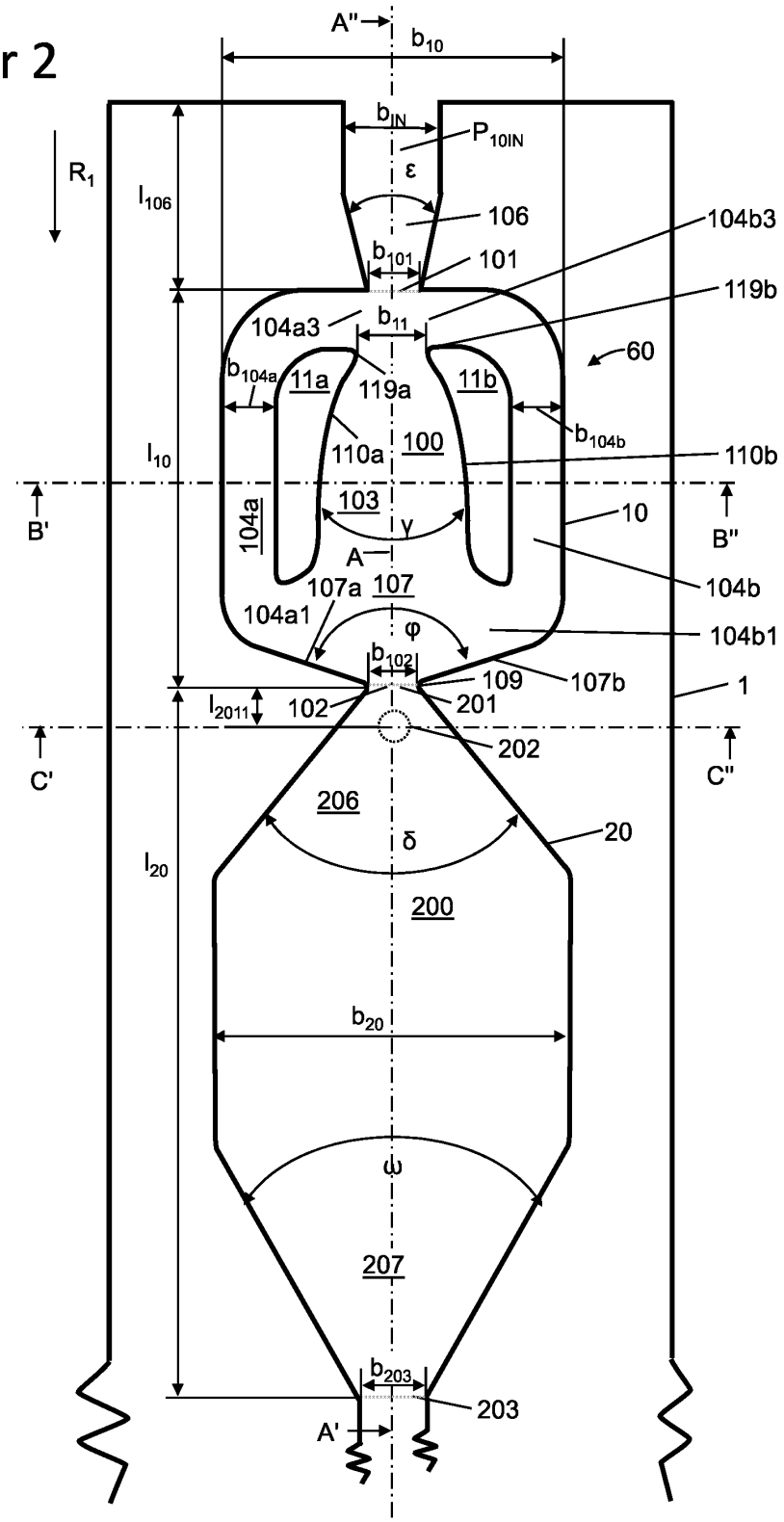
A"
b10
bIN
P10IN
ε
R1
l106
106
104b3
b101
101
119b
104a3
b11
60
b104a
11a
119a
11b
b104b
l10
110a
100
110b
B'
103
γ
10
B"
104a
A
104b
107a
107
104a1
φ
104b1
b102
109
107b
1
l2011
102
201
202
C'
C"
206
δ
20
l20
200
b20
ω
207
b203
203
A'

Figur 3

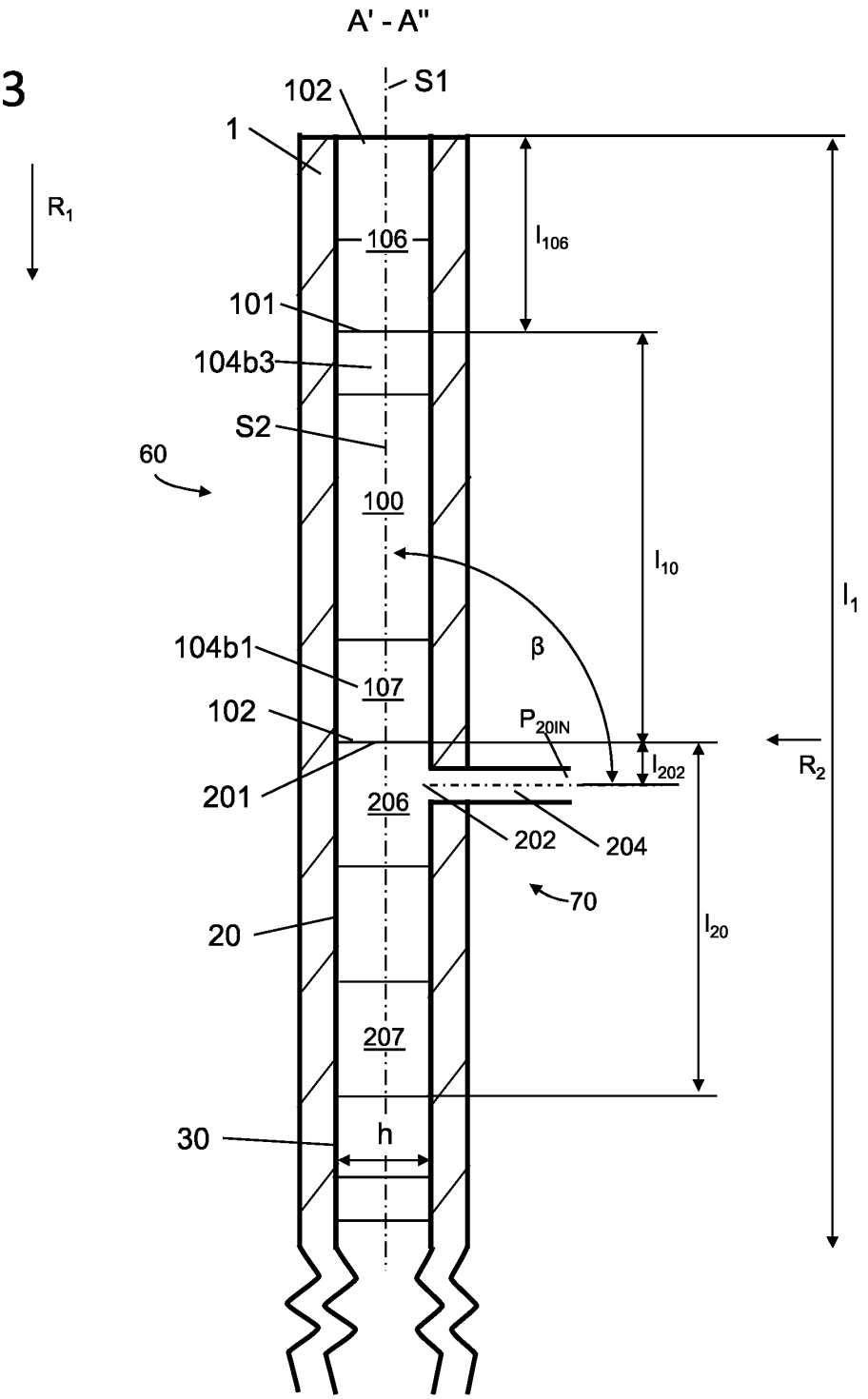
A' - A"
S1
102
1
R1
106
l106
101
104b3
S2
60
100
l10
l1
β
104b1
107
102
P20IN
l202
R2
201
206
202
204
70
20
l20
207
30
h

Figur 4

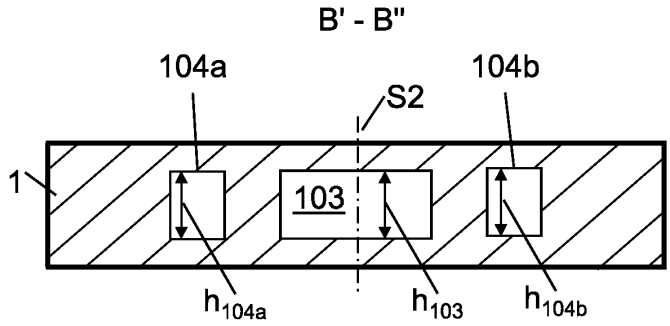

Figur 5

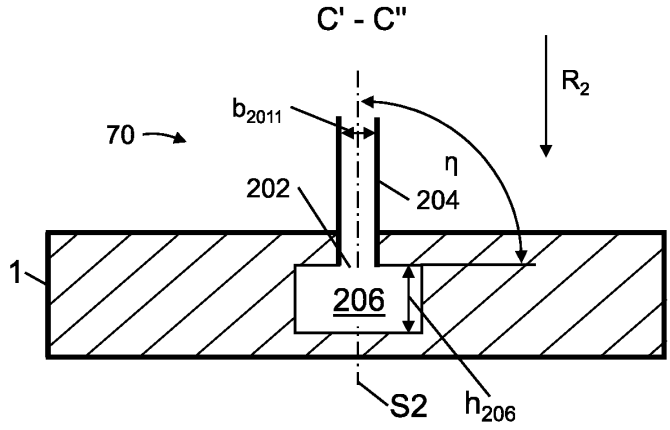

Figur 6

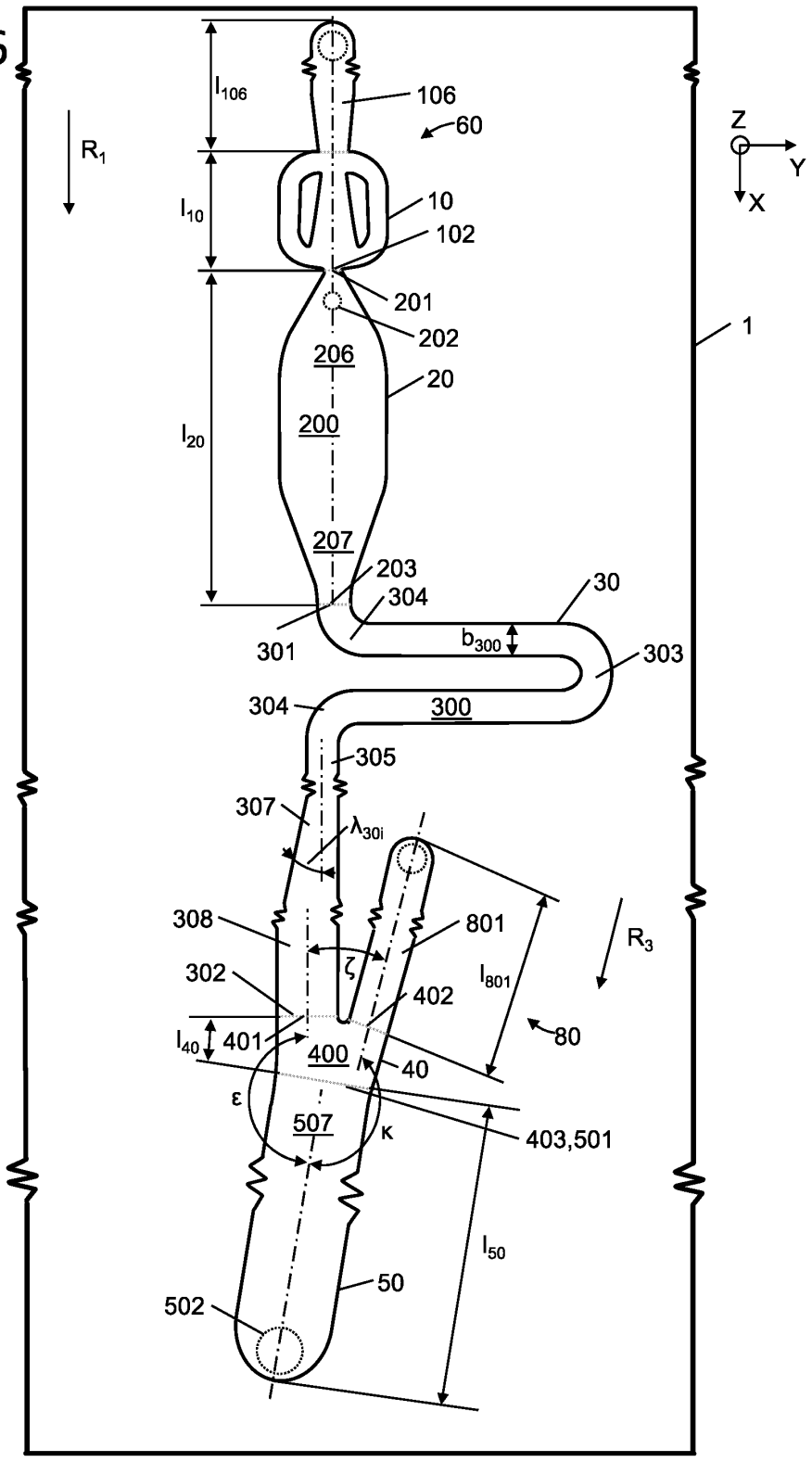
l_{106}
106
60
R_1
Z
Y
X
l_{10}
10
102
201
202
206
20
200
l_{20}
1
207
203
304
30
301
b_{300}
303
304
300
305
307
λ_{30i}
308
801
R_3
302
ζ
l_{801}
402
l_{40}
401
400
80
40
ε
507
κ
403,501
l_{50}
50
502

Figur 7

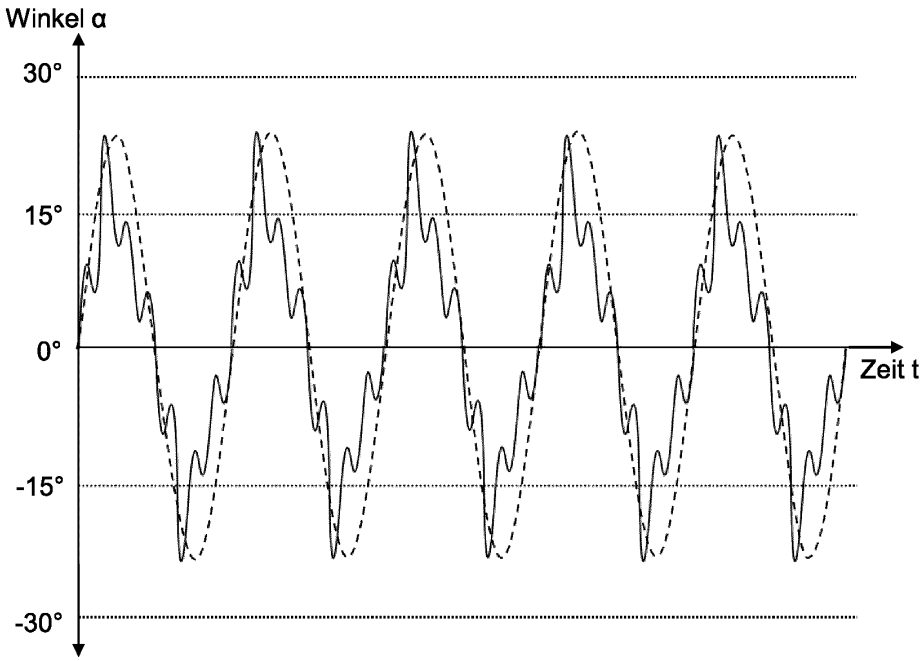

Figur 8

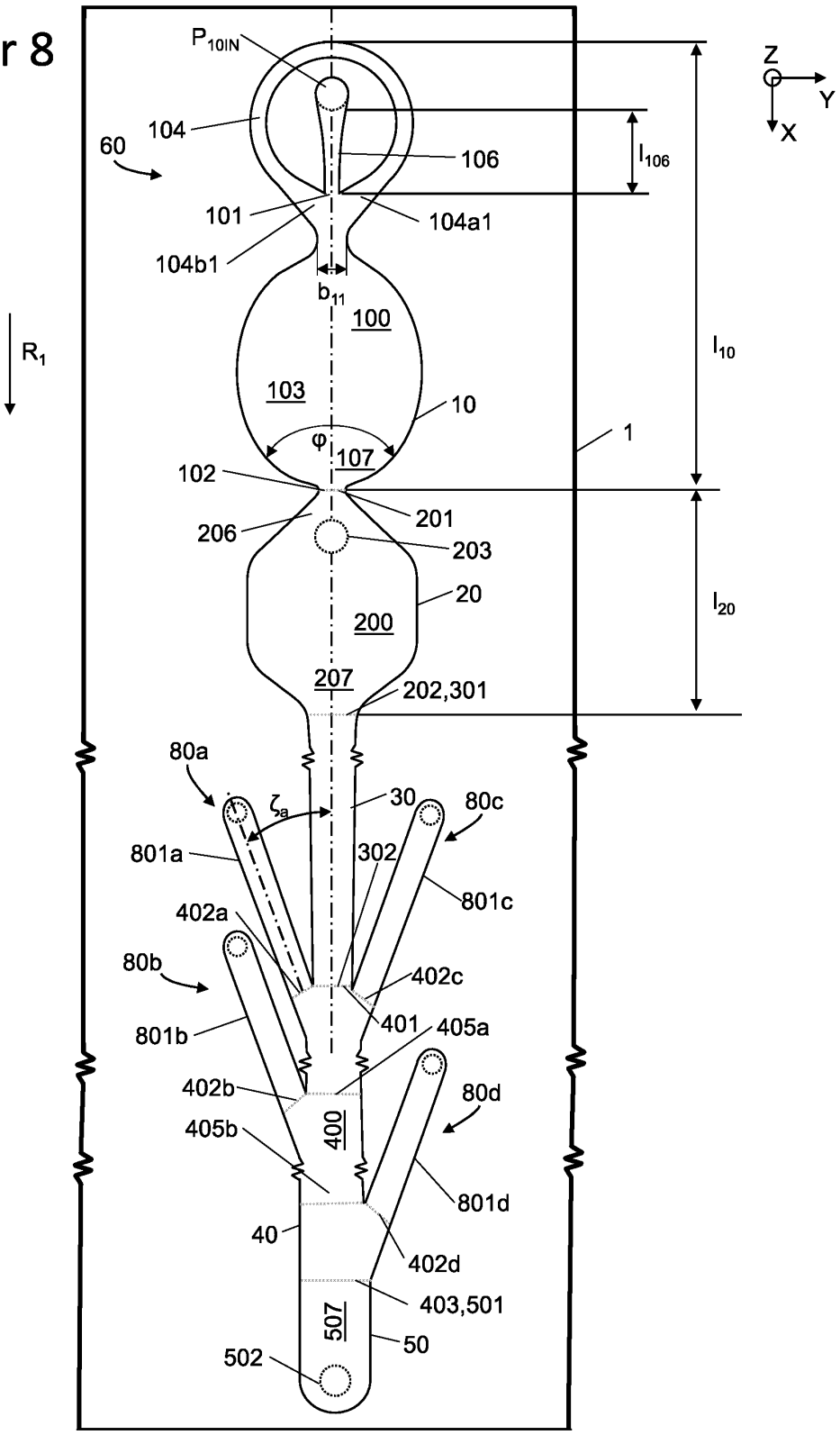
P10IN
104
60
106
101
104a1
104b1
b11
100
R1
103
10
φ
107
1
102
201
206
203
20
200
207
202,301
80a
ζa
30
80c
801a
302
801c
402a
80b
402c
401
405a
801b
402b
80d
405b
400
801d
40
402d
403,501
507
50
502
Z
Y
X
l106
l10
l20

Figur 9

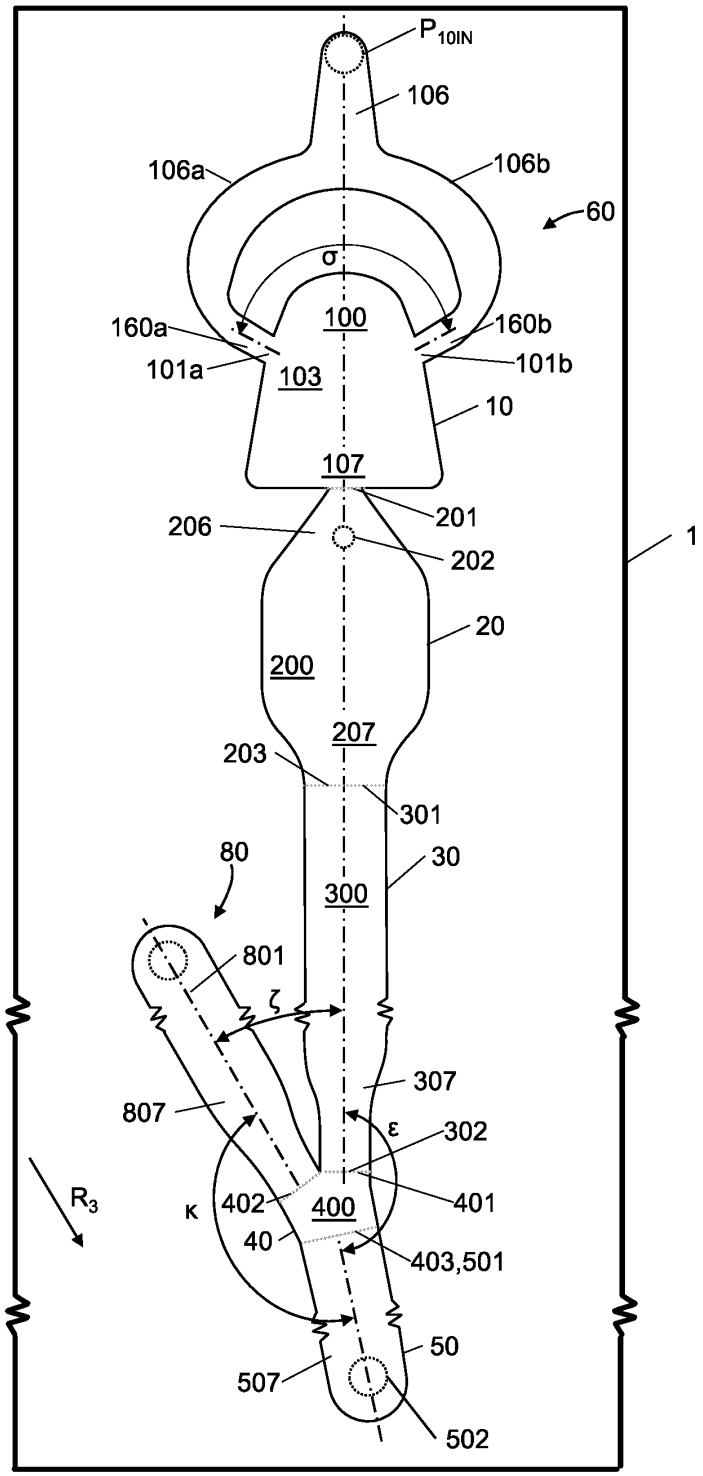
P10IN
106
106a
106b
60
σ
100
160a
160b
101a
103
101b
10
107
206
201
202
1
20
200
207
203
301
80
30
300
801
ζ
307
807
ε
302
R3
κ
402
400
401
40
403,501
50
507
502

Figur 10

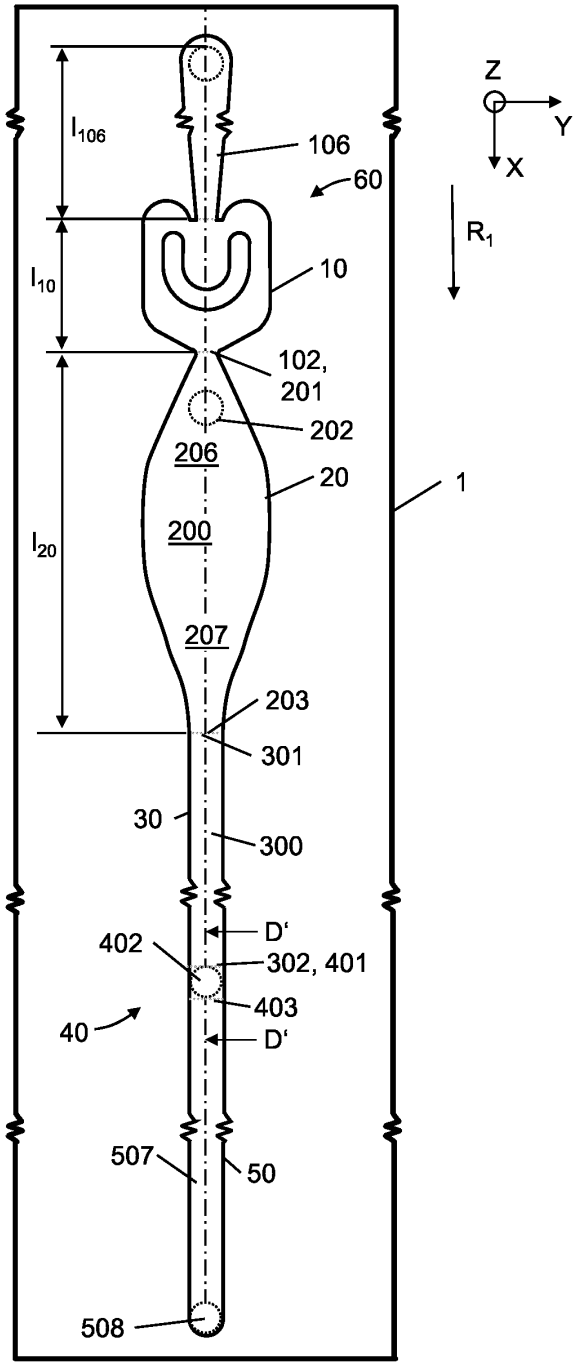
Z
Y
X
l_{106}
106
60
R_1
l_{10}
10
102,
201
202
206
20
1
l_{20}
200
207
203
301
30
300
D'
402
302, 401
403
40
D'
507
50
508

Figur 11

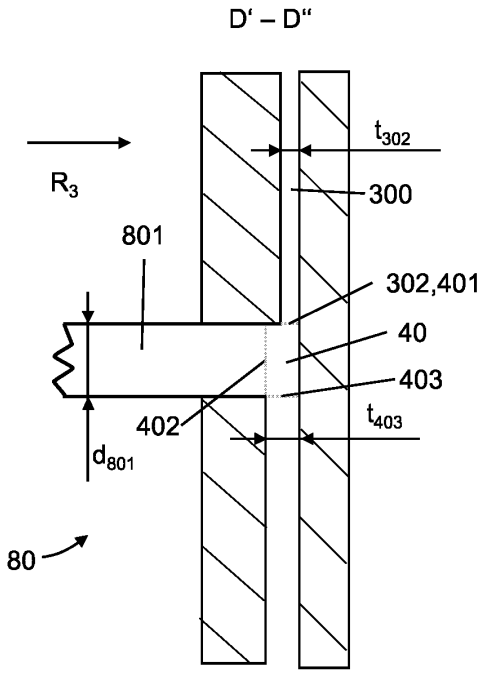

Figur 12

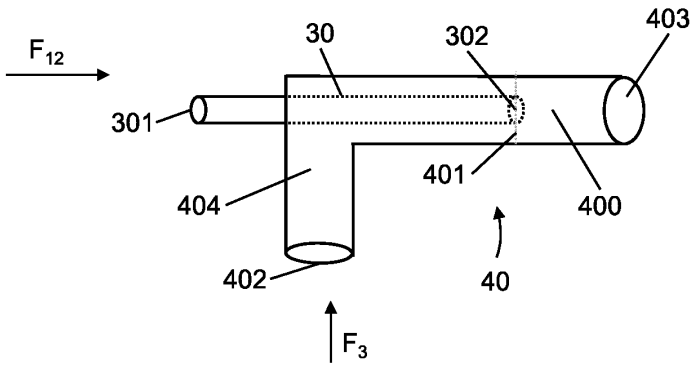

Figur 13

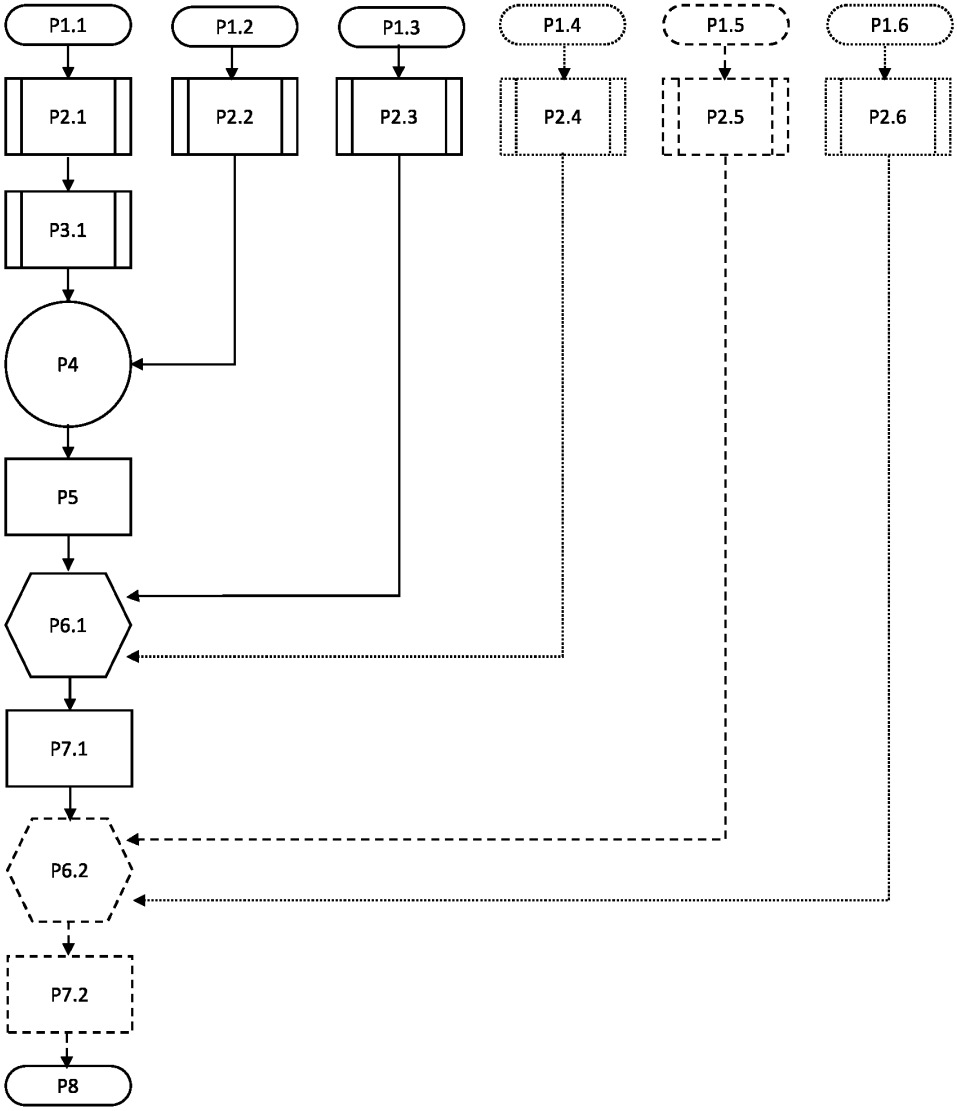
P1.1
P1.2
P1.3
P1.4
P1.5
P1.6
P2.1
P2.2
P2.3
P2.4
P2.5
P2.6
P3.1
P4
P5
P6.1
P7.1
P6.2
P7.2
P8