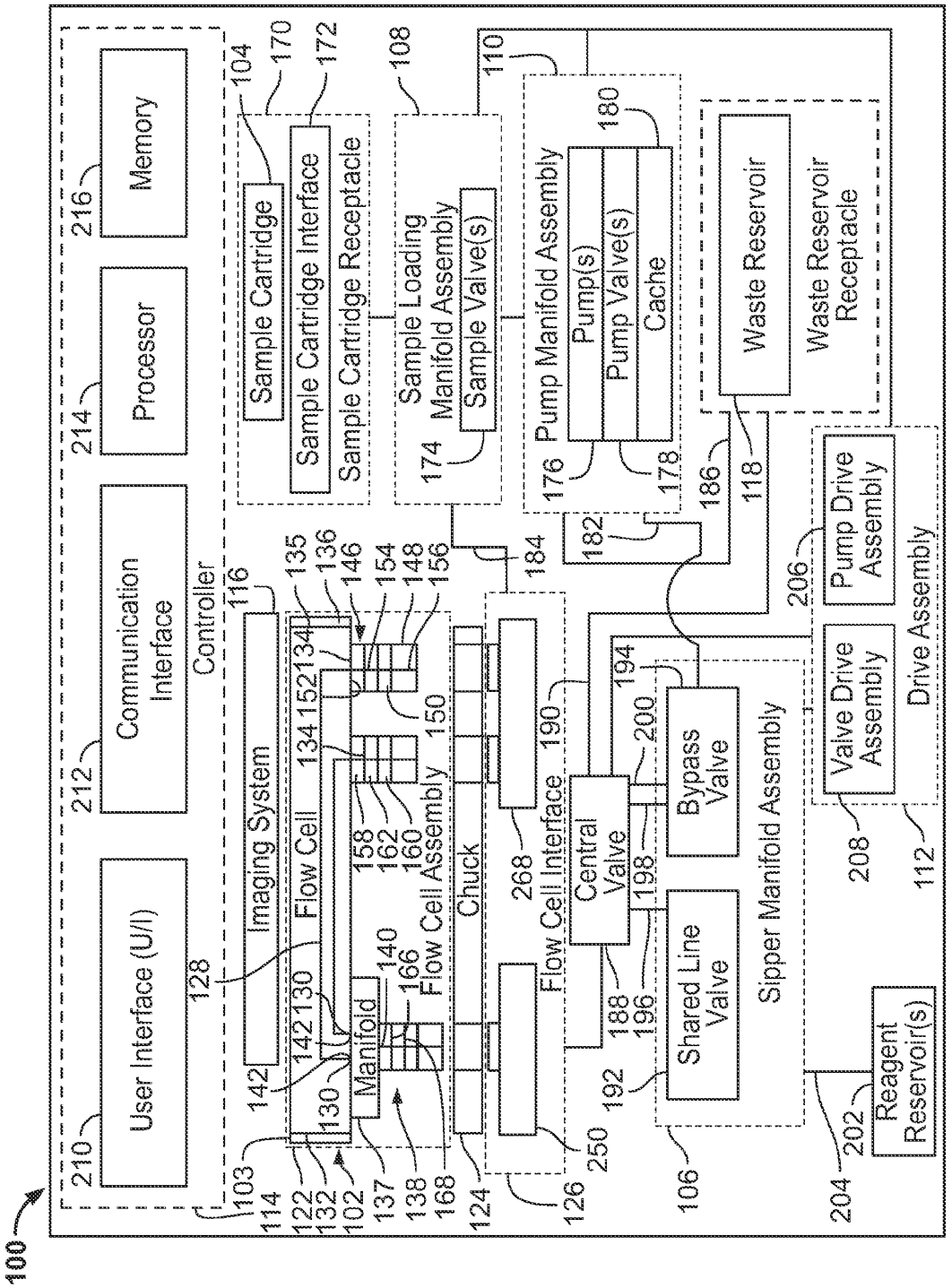
100
User Interface (U/I)
Communication Interface
Processor
Memory
Controller
Imaging System
Flow Cell
Manifold
Flow Cell Assembly
Chuck
Flow Cell Interface
Central Valve
Bypass Valve
Shared Line Valve
Sipper Manifold Assembly
Reagent Reservoir(s)
Valve Drive Assembly
Pump Drive Assembly
Drive Assembly
Sample Cartridge
Sample Cartridge Interface
Sample Cartridge Receptacle
Sample Loading Manifold Assembly
Sample Valve(s)
Pump Manifold Assembly
Pump(s)
Pump Valve(s)
Cache
Waste Reservoir
Waste Reservoir Receptacle

FIG. 1

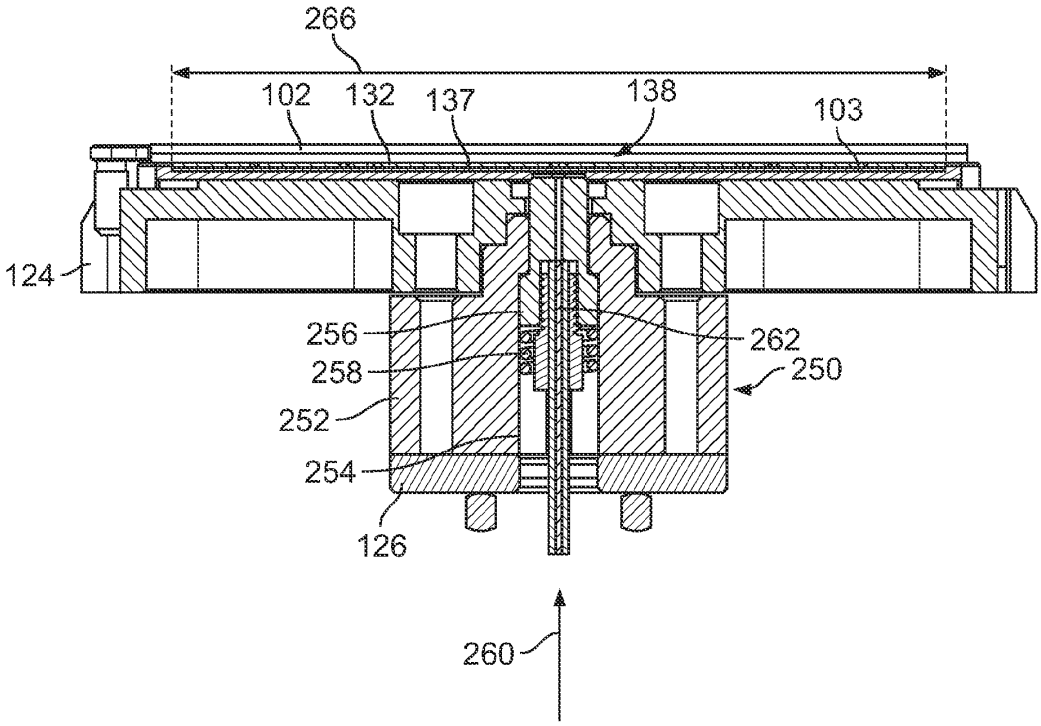


FIG. 2

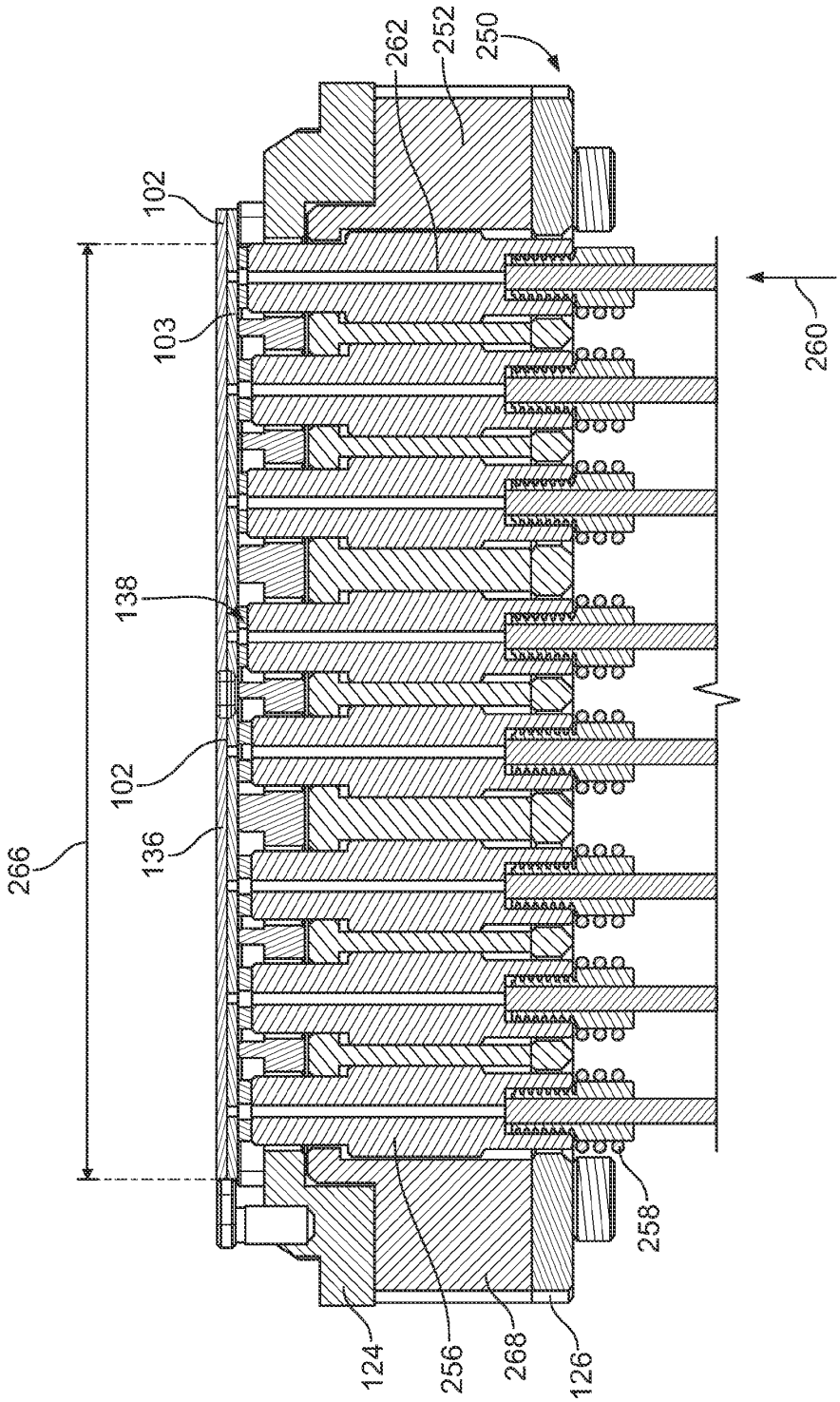


FIG. 3

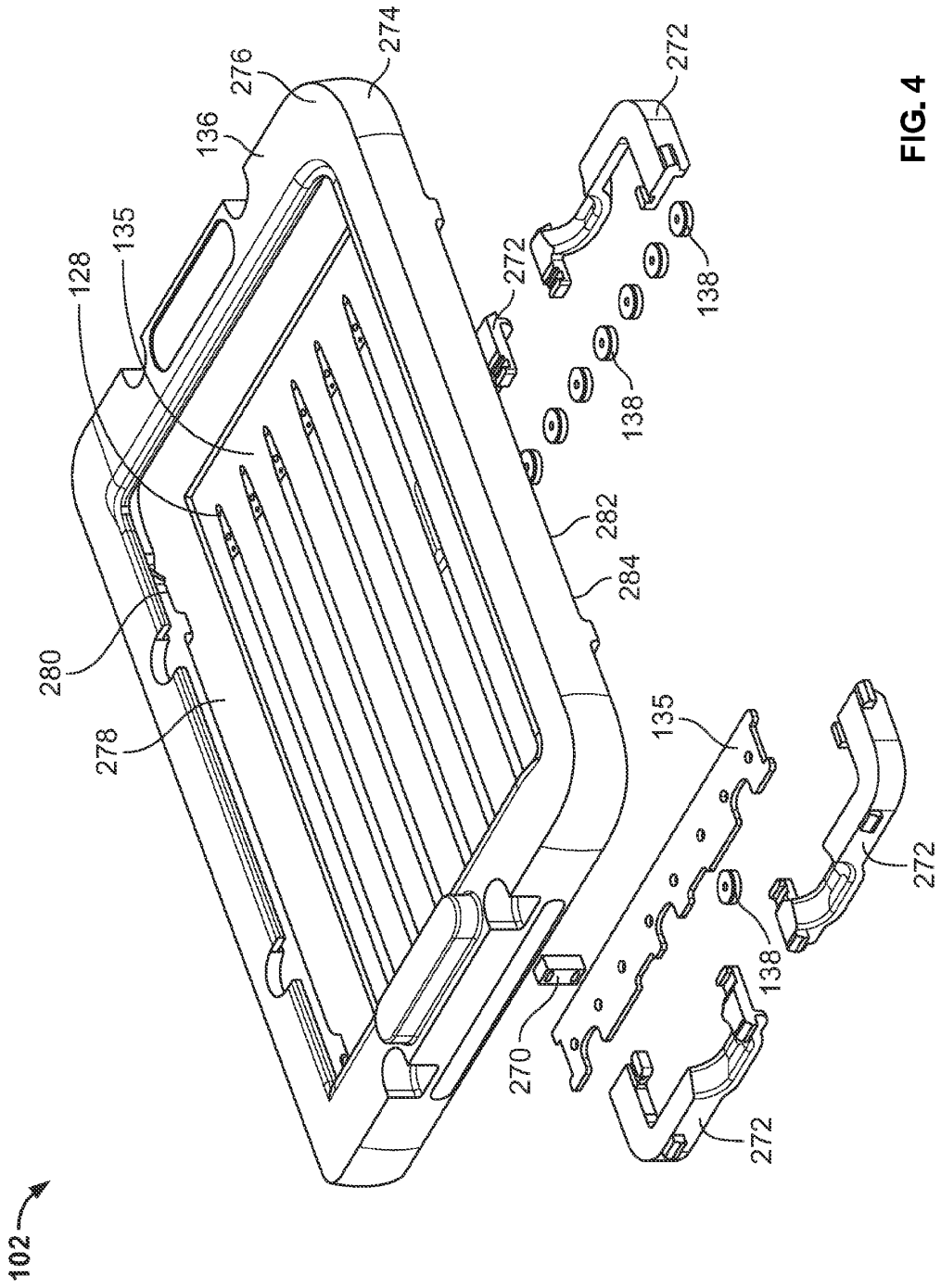
102
128
135
136
276
274
272
272
138
138
282
284
280
278
135
272
138
270
272

FIG. 4

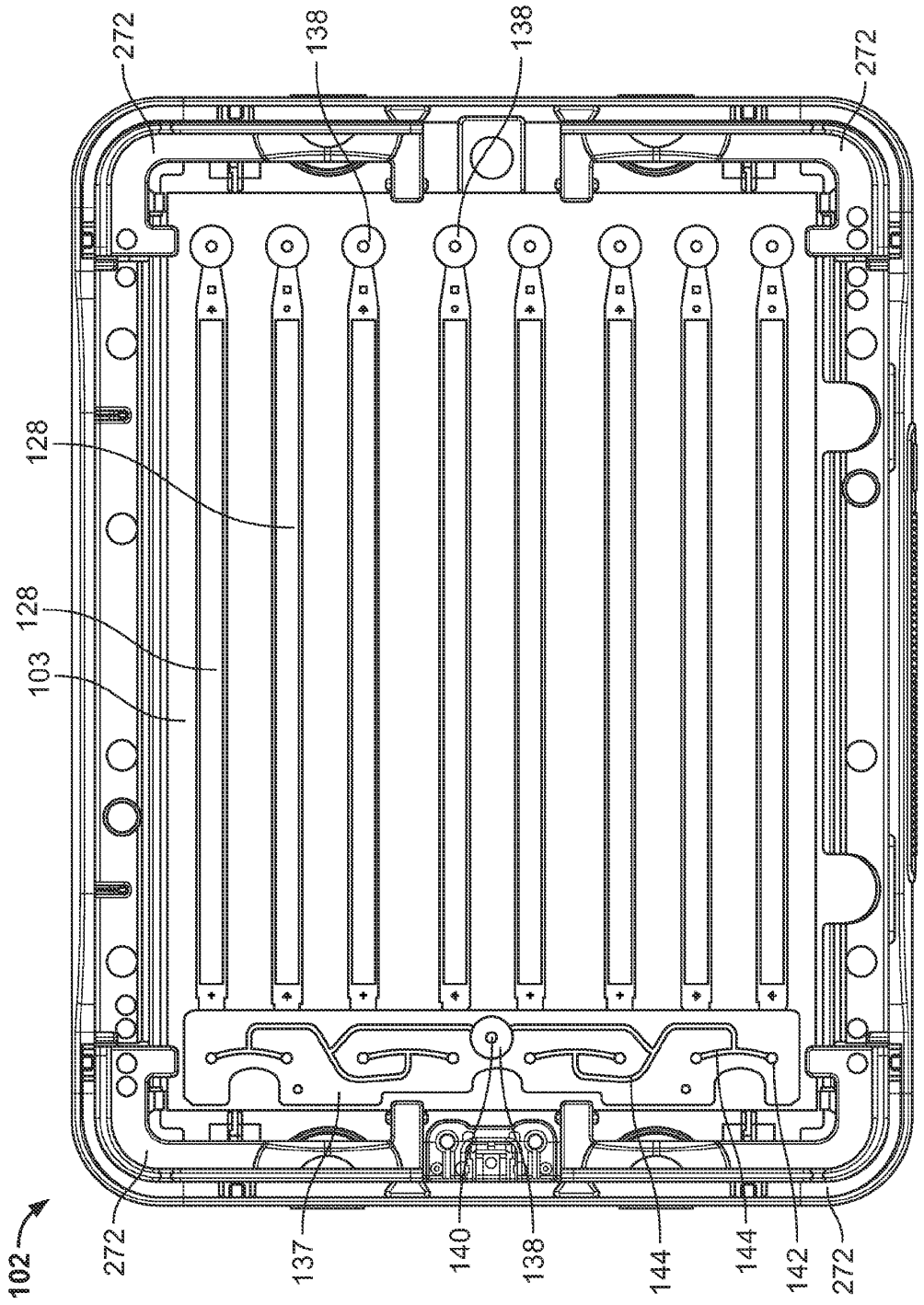


FIG. 5

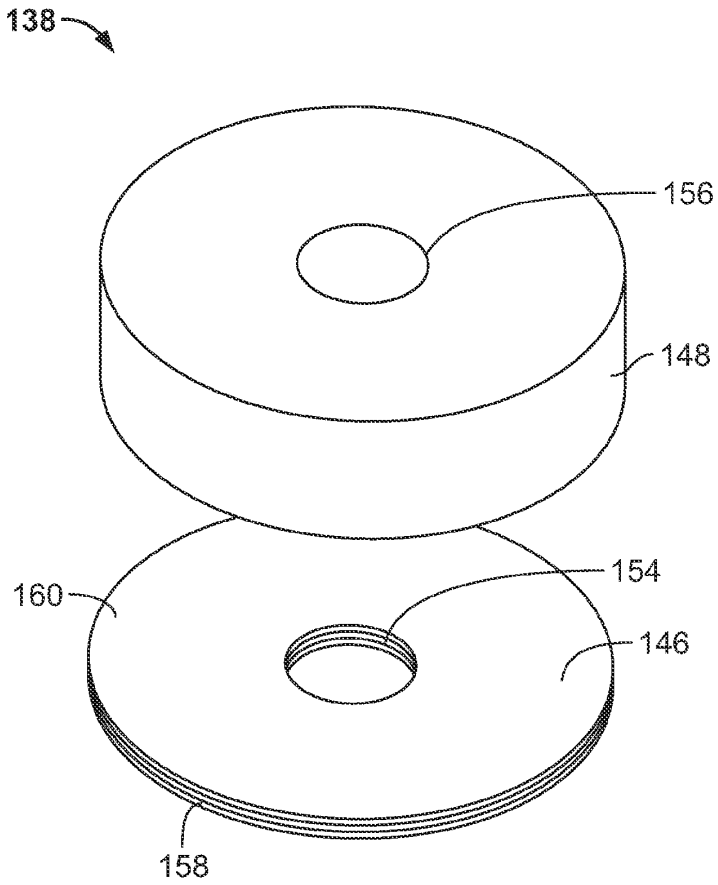


FIG. 6

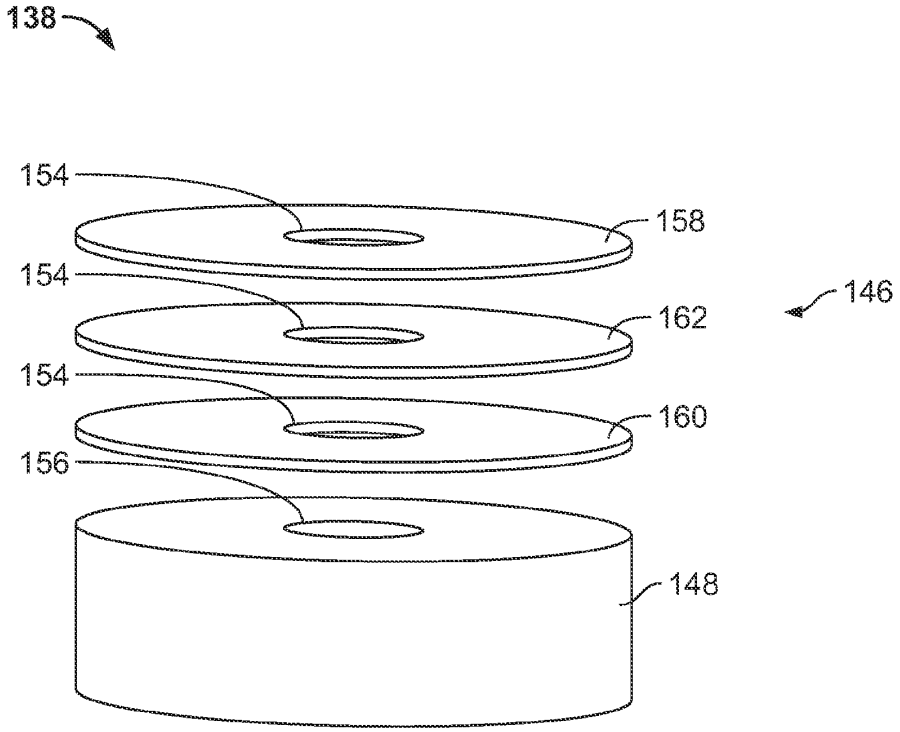


FIG. 7

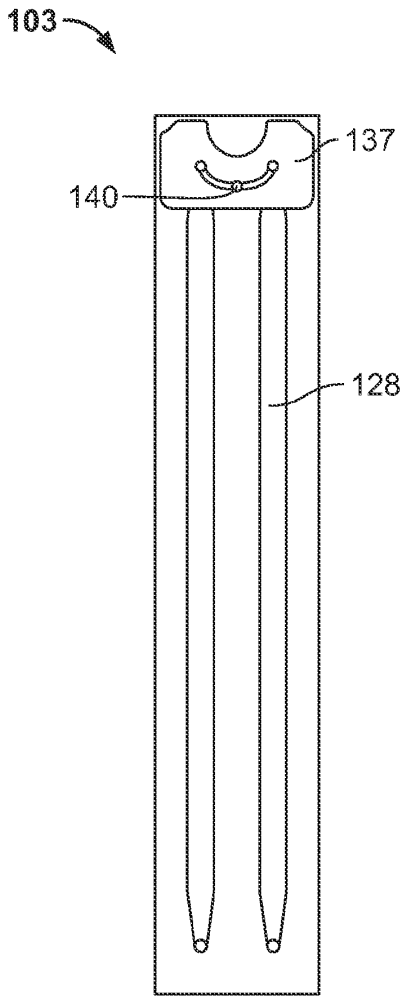


FIG. 8

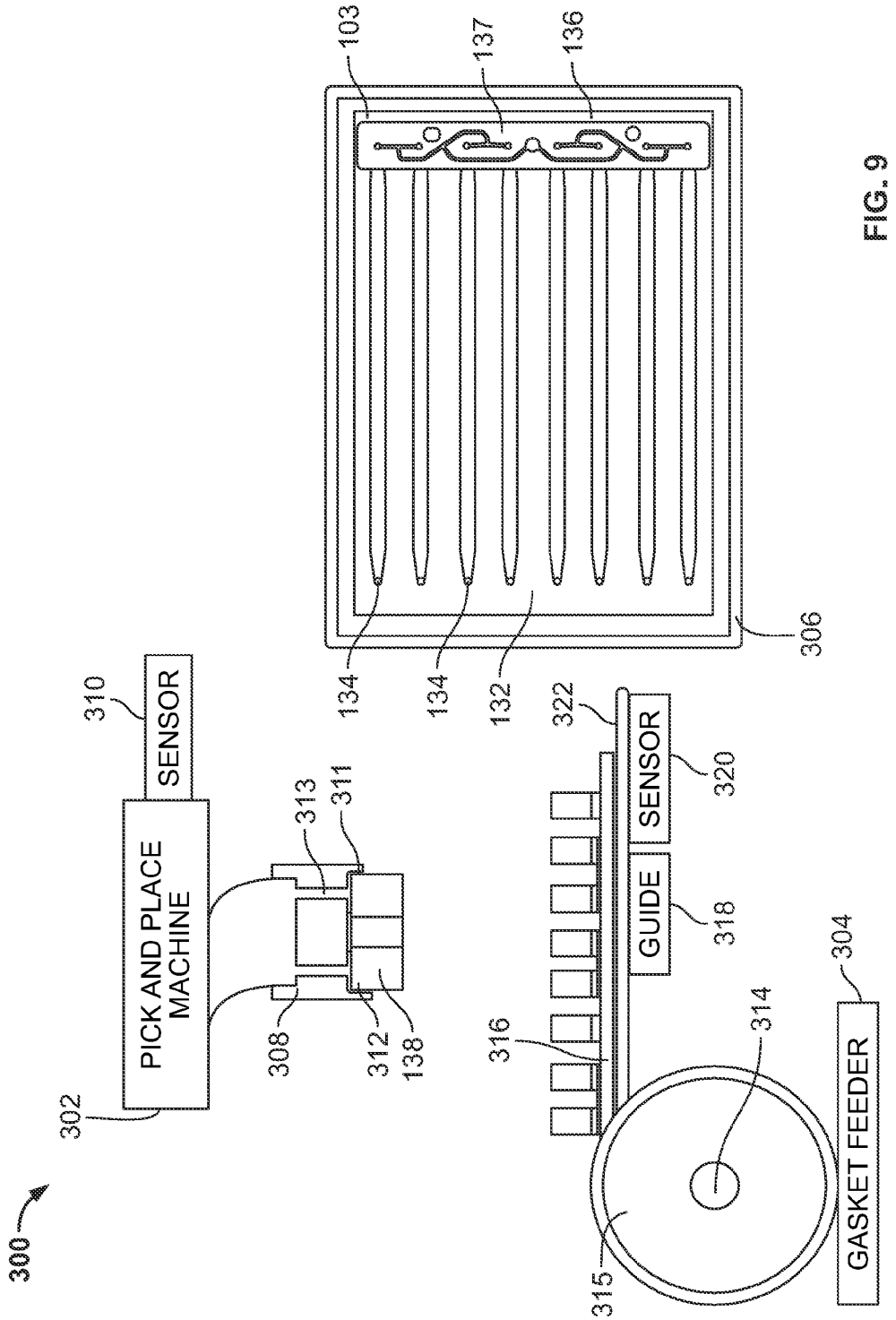
300
PICK AND PLACE MACHINE
302
SENSOR
310
313
311
308
312
138
103
137
136
134
134
132
306
322
SENSOR
320
GUIDE
318
304
316
314
315
GASKET FEEDER

FIG. 9

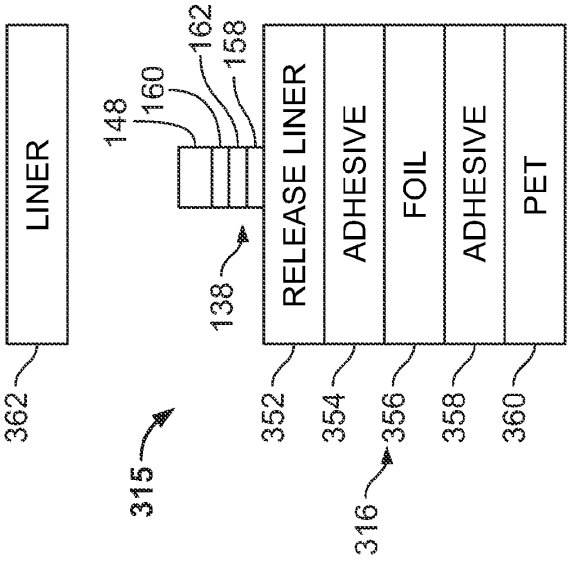
LINER
RELEASE LINER
ADHESIVE
FOIL
ADHESIVE
PET
148
160
162
158
138
315
316
362
352
354
356
358
360

FIG. 11

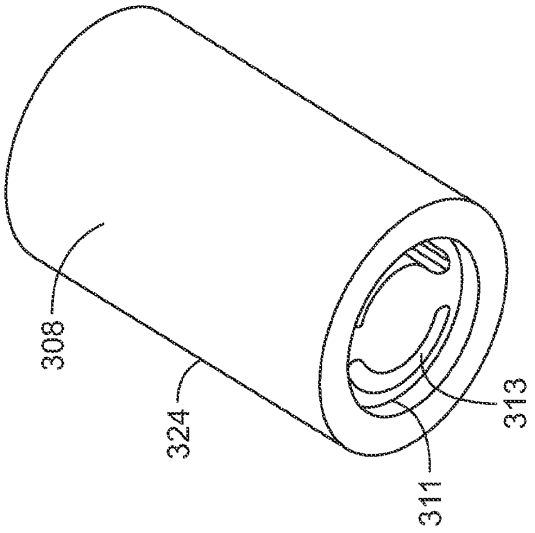
308
324
311
313

FIG. 10

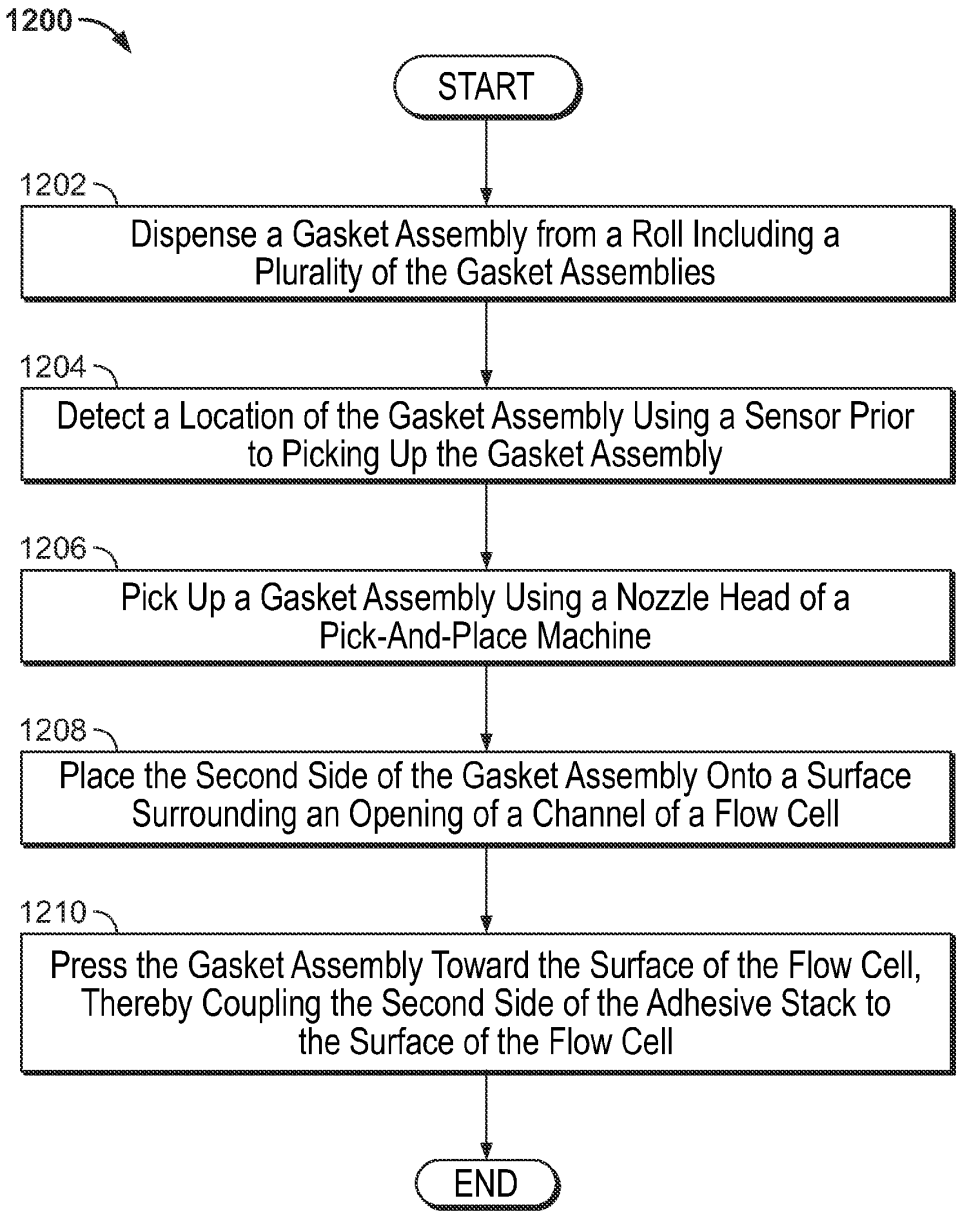
1200
START
1202
Dispense a Gasket Assembly from a Roll Including a Plurality of the Gasket Assemblies
1204
Detect a Location of the Gasket Assembly Using a Sensor Prior to Picking Up the Gasket Assembly
1206
Pick Up a Gasket Assembly Using a Nozzle Head of a Pick-And-Place Machine
1208
Place the Second Side of the Gasket Assembly Onto a Surface Surrounding an Opening of a Channel of a Flow Cell
1210
Press the Gasket Assembly Toward the Surface of the Flow Cell, Thereby Coupling the Second Side of the Adhesive Stack to the Surface of the Flow Cell
END

FIG. 12