(12) INTERNATIONAL APPLICATION PUBLISHED UNDER THE PATENT COOPERATION TREATY (PCT)

(19) World Intellectual Property Organization
International Bureau

(43) International Publication Date
7 September 2007 (07.09.2007)

PCT

(10) International Publication Number
WO 2007/098530 A1

(51) International Patent Classification:
A61B 3/113 (2006.01)

(21) International Application Number:
PCT/AU2007/000219

(22) International Filing Date:
28 February 2007 (28.02.2007)

(25) Filing Language: English

(26) Publication Language: English

(30) Priority Data:
2006901016 1 March 2006 (01.03.2006) AU

(71) Applicant *(for all designated States except US)*: **SLEEP DIAGNOSTICS PTY LTD** [AU/AU]; Suite 9, 150 Chestnut Street, Richmond, Victoria 3121 (AU).

(72) Inventor; and

(75) Inventor/Applicant *(for US only)*: **JOHNS, Murray** [AU/AU]; Suite 9, 150 Chestnut Street, Richmond, VIC 3121 (AU).

(74) Agent: **MISCHLEWSKI, Darryl**; I P Strategies, P.O. Box 1254, Camberwell, VIC 3124 (AU).

(81) Designated States *(unless otherwise indicated, for every kind of national protection available)*: AE, AG, AL, AM, AT, AU, AZ, BA, BB, BG, BR, BW, BY, BZ, CA, CH, CN, CO, CR, CU, CZ, DE, DK, DM, DZ, EC, EE, EG, ES, FI, GB, GD, GE, GH, GM, GT, HN, HR, HU, ID, IL, IN, IS, JP, KE, KG, KM, KN, KP, KR, KZ, LA, LC, LK, LR, LS, LT, LU, LV, LY, MA, MD, MG, MK, MN, MW, MX, MY, MZ, NA, NG, NI, NO, NZ, OM, PG, PH, PL, PT, RO, RS, RU, SC, SD, SE, SG, SK, SL, SM, SV, SY, TJ, TM, TN, TR, TT, TZ, UA, UG, US, UZ, VC, VN, ZA, ZM, ZW.

(84) Designated States *(unless otherwise indicated, for every kind of regional protection available)*: ARIPO (BW, GH, GM, KE, LS, MW, MZ, NA, SD, SL, SZ, TZ, UG, ZM, ZW), Eurasian (AM, AZ, BY, KG, KZ, MD, RU, TJ, TM), European (AT, BE, BG, CH, CY, CZ, DE, DK, EE, ES, FI, FR, GB, GR, HU, IE, IS, IT, LT, LU, LV, MC, NL, PL, PT, RO, SE, SI, SK, TR), OAPI (BF, BJ, CF, CG, CI, CM, GA, GN, GQ, GW, ML, MR, NE, SN, TD, TG).

Published:
— *with international search report*

[Continued on next page]

(54) **Title:** INCAPACITY MONITOR

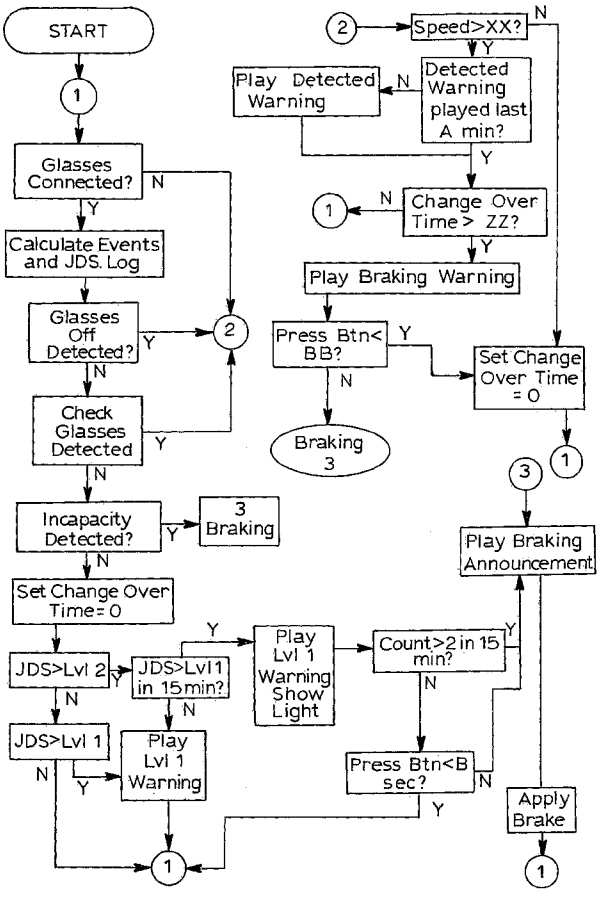

(57) **Abstract:** A method of monitoring incapacity of a subject which includes the steps of continuously monitoring eye and eyelid movement of at least one eye of the subject; analyzing eye and eyelid movements to obtain measures of ocular quiescence and the duration of an interval of no eye or eyelid movement; and if the duration of ocular quiescenece exceeds a predetermined value providing a potential incapacity warning and requesting a response within a predetermined period, and applying an emergency procedure if no response is made within a predetermined interval.

WO 2007/098530 A1

For two-letter codes and other abbreviations, refer to the "Guidance Notes on Codes and Abbreviations" appearing at the beginning of each regular issue of the PCT Gazette.