(12) INTERNATIONAL APPLICATION PUBLISHED UNDER THE PATENT COOPERATION TREATY (PCT)

(19) World Intellectual Property Organization
International Bureau

(43) International Publication Date
17 April 2008 (17.04.2008)

PCT

(10) International Publication Number
WO 2008/043131 A1

(51) International Patent Classification:
F03B 3/04 (2006.01) *F03B 3/06* (2006.01)
F03B 3/08 (2006.01) *F03B 3/18* (2006.01)

(21) International Application Number:
PCT/AU2007/001510

(22) International Filing Date: 5 October 2007 (05.10.2007)

(25) Filing Language: English

(26) Publication Language: English

(30) Priority Data:

2006905675	13 October 2006 (13.10.2006)	AU
2007901399	16 March 2007 (16.03.2007)	AU
2007903965	23 July 2007 (23.07.2007)	AU
2007904176	3 August 2007 (03.08.2007)	AU
2007904173	3 August 2007 (03.08.2007)	AU

(71) Applicant and
(72) Inventor: **WEST, Stephen, Mark** [AU/SG]; 27A Dunsfold Drive, Singapore 404359 (SG).

(72) Inventor; and
(75) Inventor/Applicant *(for US only)*: **WEST, Steele** [AU/SG]; 27A Dunsfold Drive, Singapore 404359 (SG).

(74) Agent: **WRAY & ASSOCIATES**; Level 4, The Quadrant, 1 William Street, Perth, Western Australia 6000 (AU).

(81) Designated States *(unless otherwise indicated, for every kind of national protection available)*: AE, AG, AL, AM, AT, AU, AZ, BA, BB, BG, BH, BR, BW, BY, BZ, CA, CH, CN, CO, CR, CU, CZ, DE, DK, DM, DO, DZ, EC, EE, EG, ES, FI, GB, GD, GE, GH, GM, GT, HN, HR, HU, ID, IL, IN, IS, JP, KE, KG, KM, KN, KP, KR, KZ, LA, LC, LK, LR, LS, LT, LU, LY, MA, MD, ME, MG, MK, MN, MW, MX, MY, MZ, NA, NG, NI, NO, NZ, OM, PG, PH, PL, PT, RO, RS, RU, SC, SD, SE, SG, SK, SL, SM, SV, SY, TJ, TM, TN, TR, TT, TZ, UA, UG, US, UZ, VC, VN, ZA, ZM, ZW.

(84) Designated States *(unless otherwise indicated, for every kind of regional protection available)*: ARIPO (BW, GH, GM, KE, LS, MW, MZ, NA, SD, SL, SZ, TZ, UG, ZM, ZW), Eurasian (AM, AZ, BY, KG, KZ, MD, RU, TJ, TM), European (AT, BE, BG, CH, CY, CZ, DE, DK, EE, ES, FI, FR, GB, GR, HU, IE, IS, IT, LT, LU, LV, MC, MT, NL, PL, PT, RO, SE, SI, SK, TR), OAPI (BF, BJ, CF, CG, CI, CM, GA, GN, GQ, GW, ML, MR, NE, SN, TD, TG).

Published:
— *with international search report*

(54) **Title:** TURBINE UNIT AND ASSEMBLY

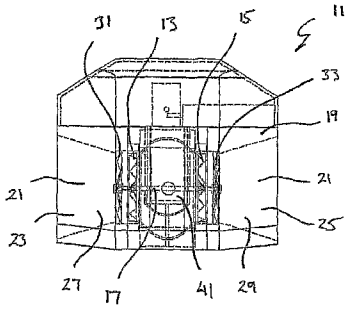

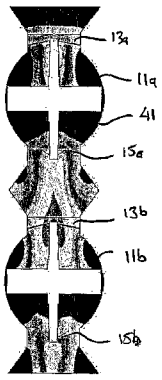

(57) **Abstract:** A turbine unit (11) adapted to be placed in a flowing fluid. The turbine unit (11) comprises a first turbine set (13) and a second turbine set (15) mounted within a passage (21) of a housing (19). The first turbine blade set (13) and a second turbine blade set (15) are set in opposed relation such that in operation a region between the two turbine blade sets (13, 15) has a lower pressure than the fluid pressure at an opening of the passage (21). The turbine unit (11) being used to generate power. The turbine units (Figures 8 to 11) can be abutted with each other such that they define a passage and each turbine unit comprises a driving turbine blade set before fluid passes to a pumping turbine blade set.

WO 2008/043131 A1