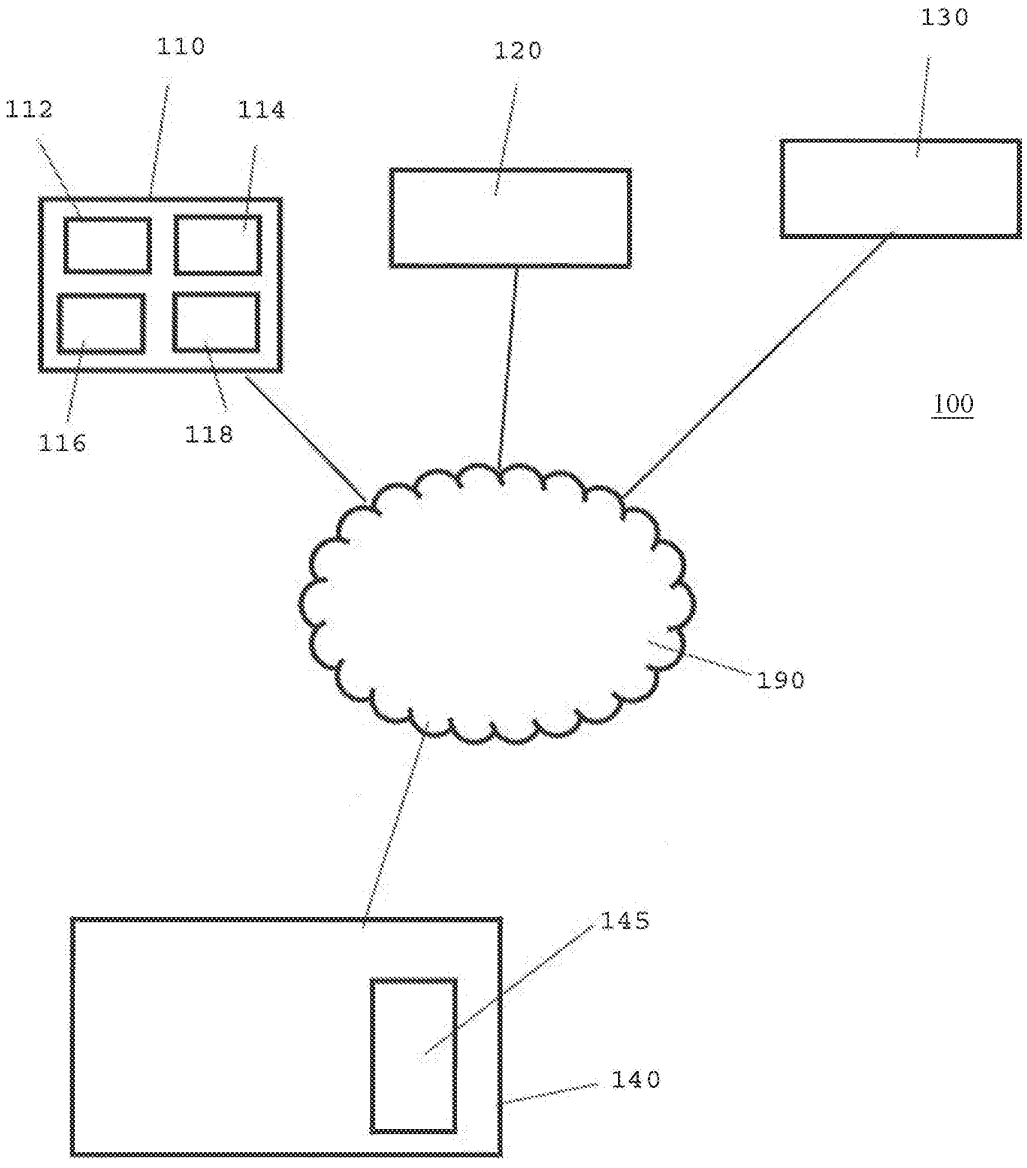

FIG. 1

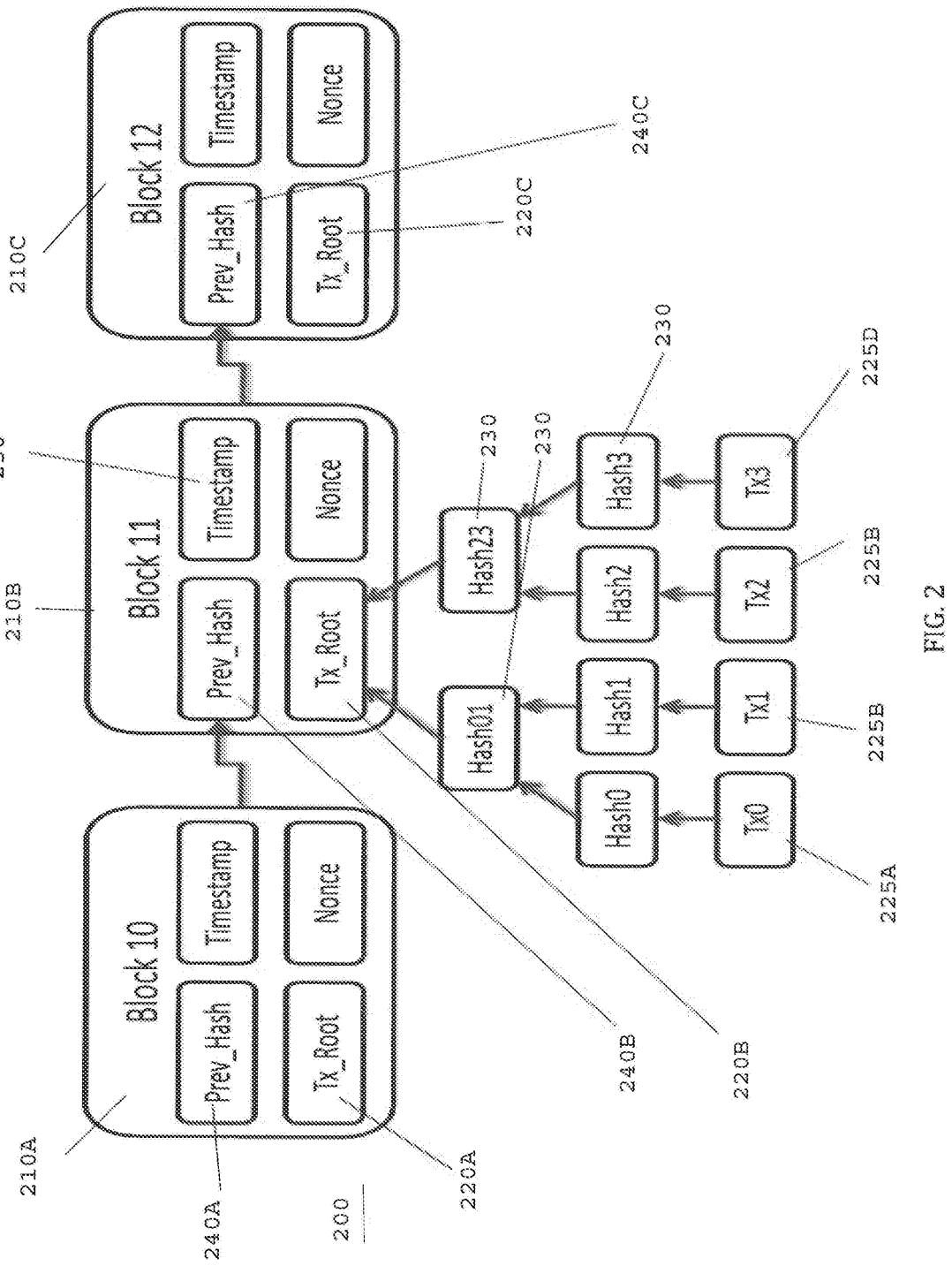
Block 10
Prev_Hash
Timestamp
Tx_Root
Nonce
Block 11
Prev_Hash
Timestamp
Tx_Root
Nonce
Block 12
Prev_Hash
Timestamp
Tx_Root
Nonce
Hash0
Hash1
Hash2
Hash3
Hash01
Hash23
Tx0
Tx1
Tx2
Tx3
210A
210B
210C
220A
220B
220C
225A
225B
225B
225D
230
230
240A
240B
240C
250
200

FIG. 2

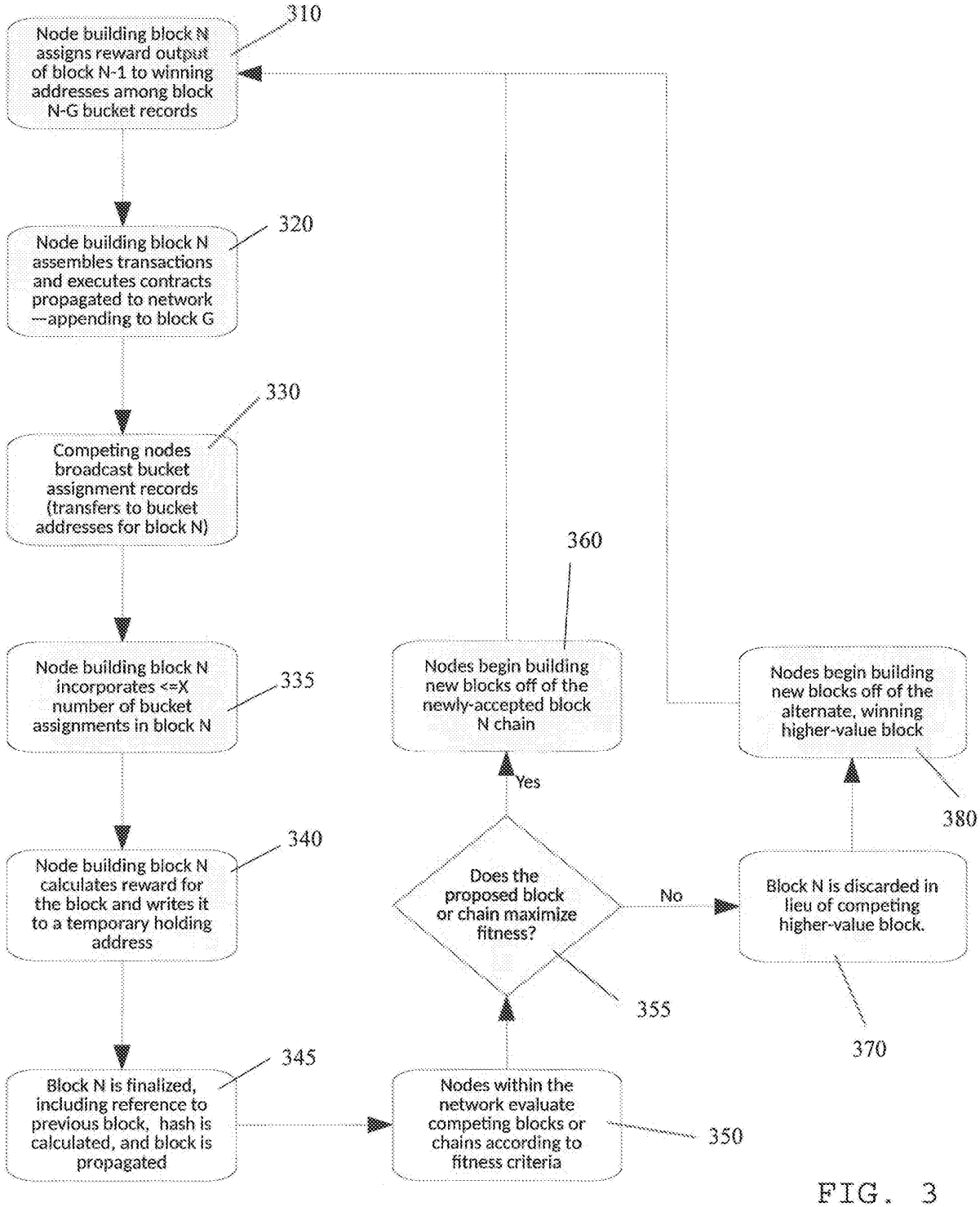
Node building block N assigns reward output of block N-1 to winning addresses among block N-G bucket records
310
Node building block N assembles transactions and executes contracts propagated to network —appending to block G
320
Competing nodes broadcast bucket assignment records (transfers to bucket addresses for block N)
330
Node building block N incorporates <=X number of bucket assignments in block N
335
Node building block N calculates reward for the block and writes it to a temporary holding address
340
Block N is finalized, including reference to previous block, hash is calculated, and block is propagated
345
Nodes within the network evaluate competing blocks or chains according to fitness criteria
350
Does the proposed block or chain maximize fitness?
355
Yes
No
Nodes begin building new blocks off of the newly-accepted block N chain
360
Block N is discarded in lieu of competing higher-value block.
370
Nodes begin building new blocks off of the alternate, winning higher-value block
380

FIG. 3

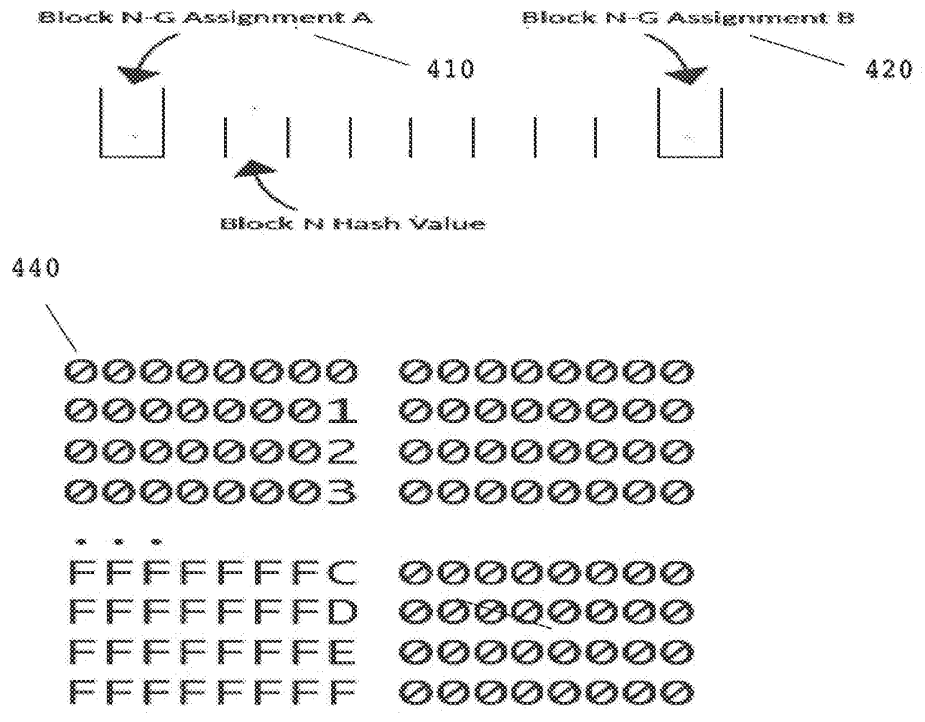
Block N-G Assignment A
410
Block N-G Assignment B
420
Block N Hash Value
440
00000000 00000000
00000001 00000000
00000002 00000000
00000003 00000000
. . .
FFFFFFFC 00000000
FFFFFFFD 00000000
FFFFFFFE 00000000
FFFFFFFF 00000000
01 234567 89ABCDEF
Addr type
Block number
Bucket Index
462
465
468

FIG. 4A


470
Fixed Bucket Assignment Address
FFFFFFFFFFFFFFFF
Block Number
0123456789ABCDEF
Bucket Index
FFFFFFFF00000000
480
490

FIG. 4B

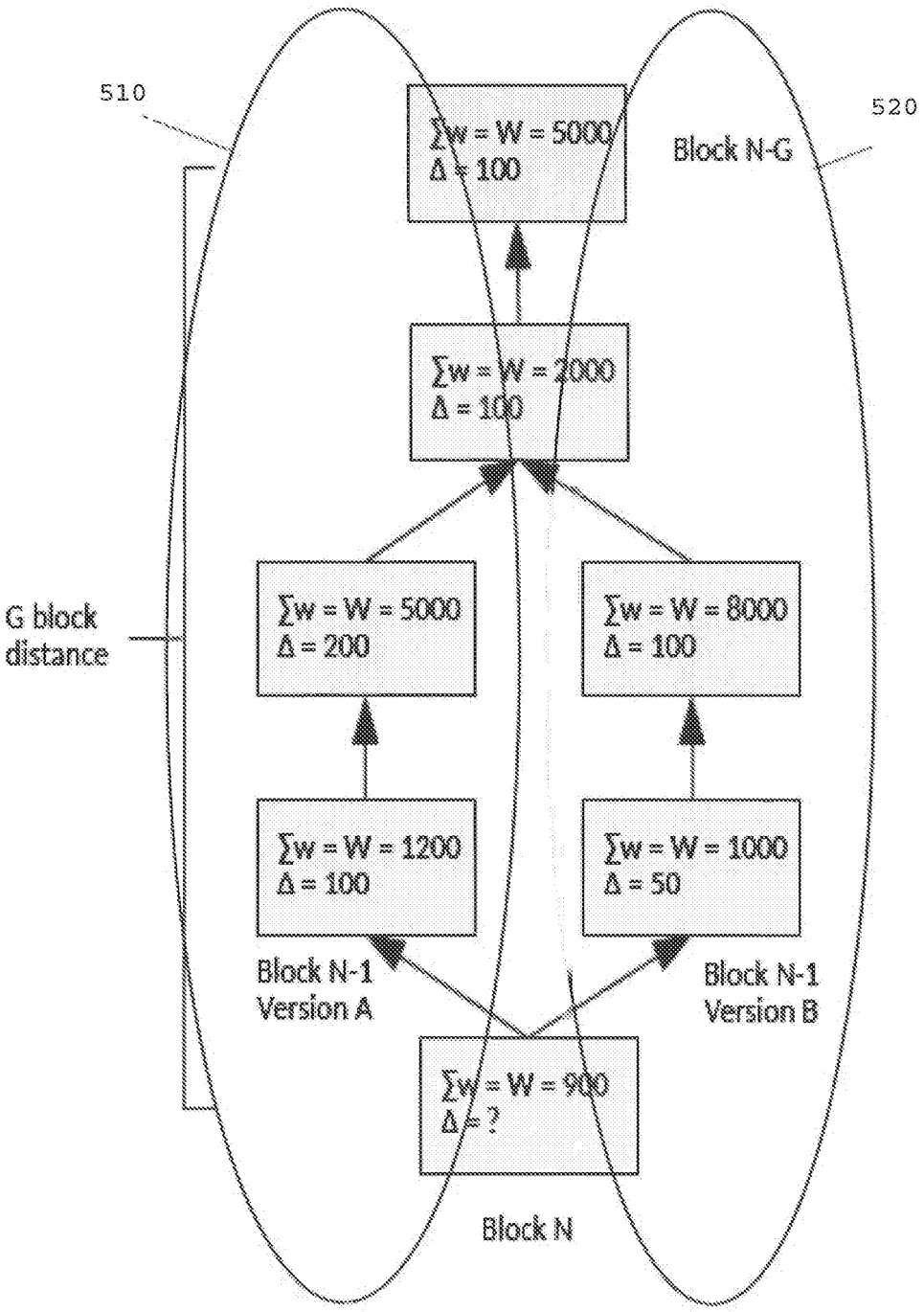
510
520
∑w = W = 5000
Δ = 100
Block N-G
∑w = W = 2000
Δ = 100
G block
distance
∑w = W = 5000
Δ = 200
∑w = W = 8000
Δ = 100
∑w = W = 1200
Δ = 100
∑w = W = 1000
Δ = 50
Block N-1
Version A
Block N-1
Version B
∑w = W = 900
Δ = ?
Block N

FIG. 5

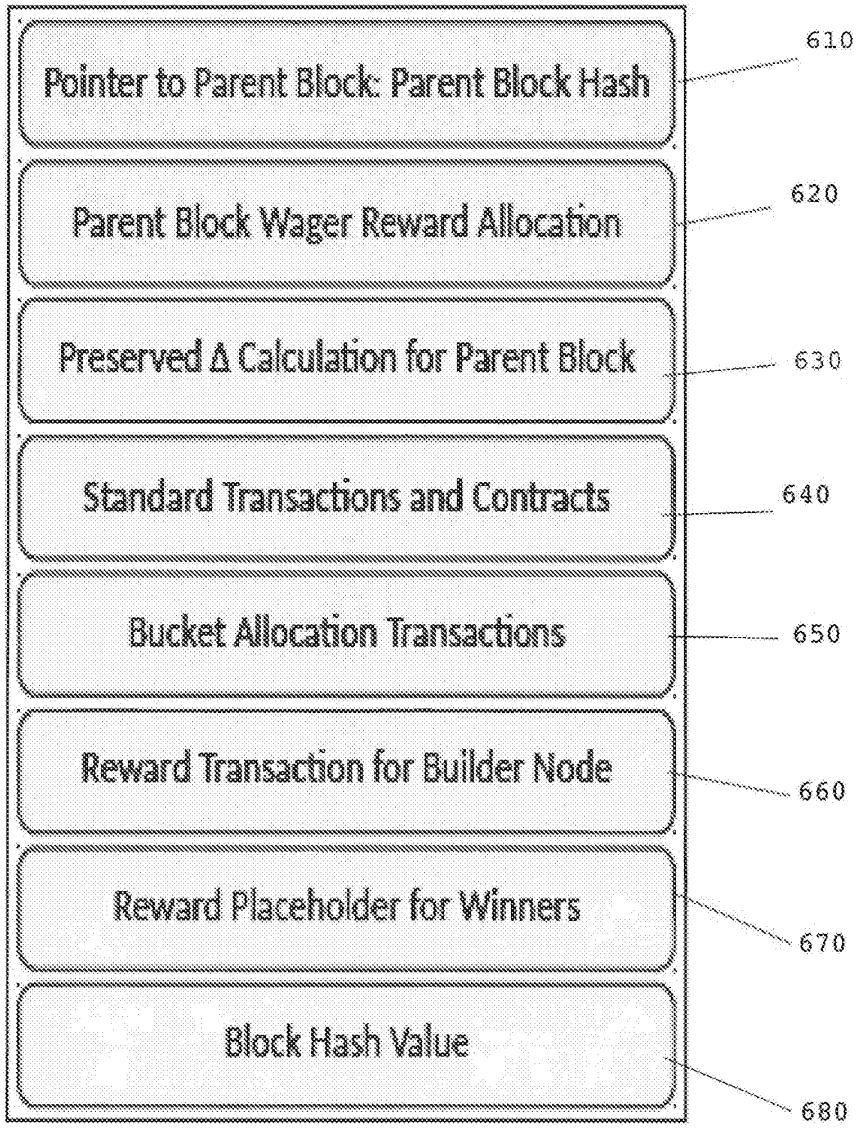
Pointer to Parent Block: Parent Block Hash
610
Parent Block Wager Reward Allocation
620
Preserved Δ Calculation for Parent Block
630
Standard Transactions and Contracts
640
Bucket Allocation Transactions
650
Reward Transaction for Builder Node
660
Reward Placeholder for Winners
670
Block Hash Value
680

FIG. 6

FIG. 7

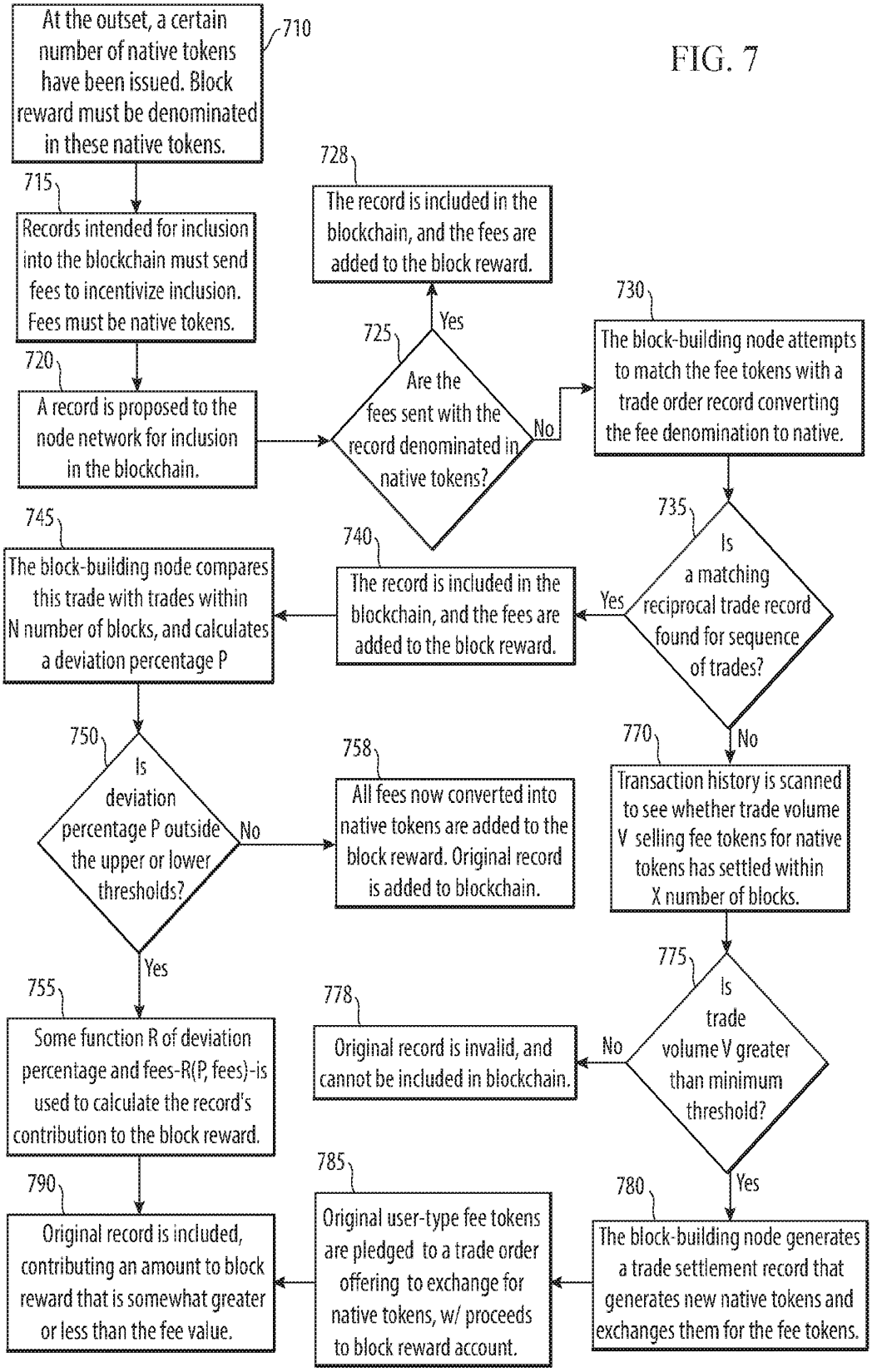
At the outset, a certain number of native tokens have been issued. Block reward must be denominated in these native tokens.
710
715
Records intended for inclusion into the blockchain must send fees to incentivize inclusion. Fees must be native tokens.
720
A record is proposed to the node network for inclusion in the blockchain.
725
Are the fees sent with the record denominated in native tokens?
Yes
No
728
The record is included in the blockchain, and the fees are added to the block reward.
730
The block-building node attempts to match the fee tokens with a trade order record converting the fee denomination to native.
735
Is a matching reciprocal trade record found for sequence of trades?
Yes
No
740
The record is included in the blockchain, and the fees are added to the block reward.
745
The block-building node compares this trade with trades within N number of blocks, and calculates a deviation percentage P
750
Is deviation percentage P outside the upper or lower thresholds?
No
Yes
758
All fees now converted into native tokens are added to the block reward. Original record is added to blockchain.
770
Transaction history is scanned to see whether trade volume V selling fee tokens for native tokens has settled within X number of blocks.
775
Is trade volume V greater than minimum threshold?
No
Yes
778
Original record is invalid, and cannot be included in blockchain.
780
The block-building node generates a trade settlement record that generates new native tokens and exchanges them for the fee tokens.
785
Original user-type fee tokens are pledged to a trade order offering to exchange for native tokens, w/ proceeds to block reward account.
790
Original record is included, contributing an amount to block reward that is somewhat greater or less than the fee value.
755
Some function R of deviation percentage and fees-R(P, fees)-is used to calculate the record's contribution to the block reward.

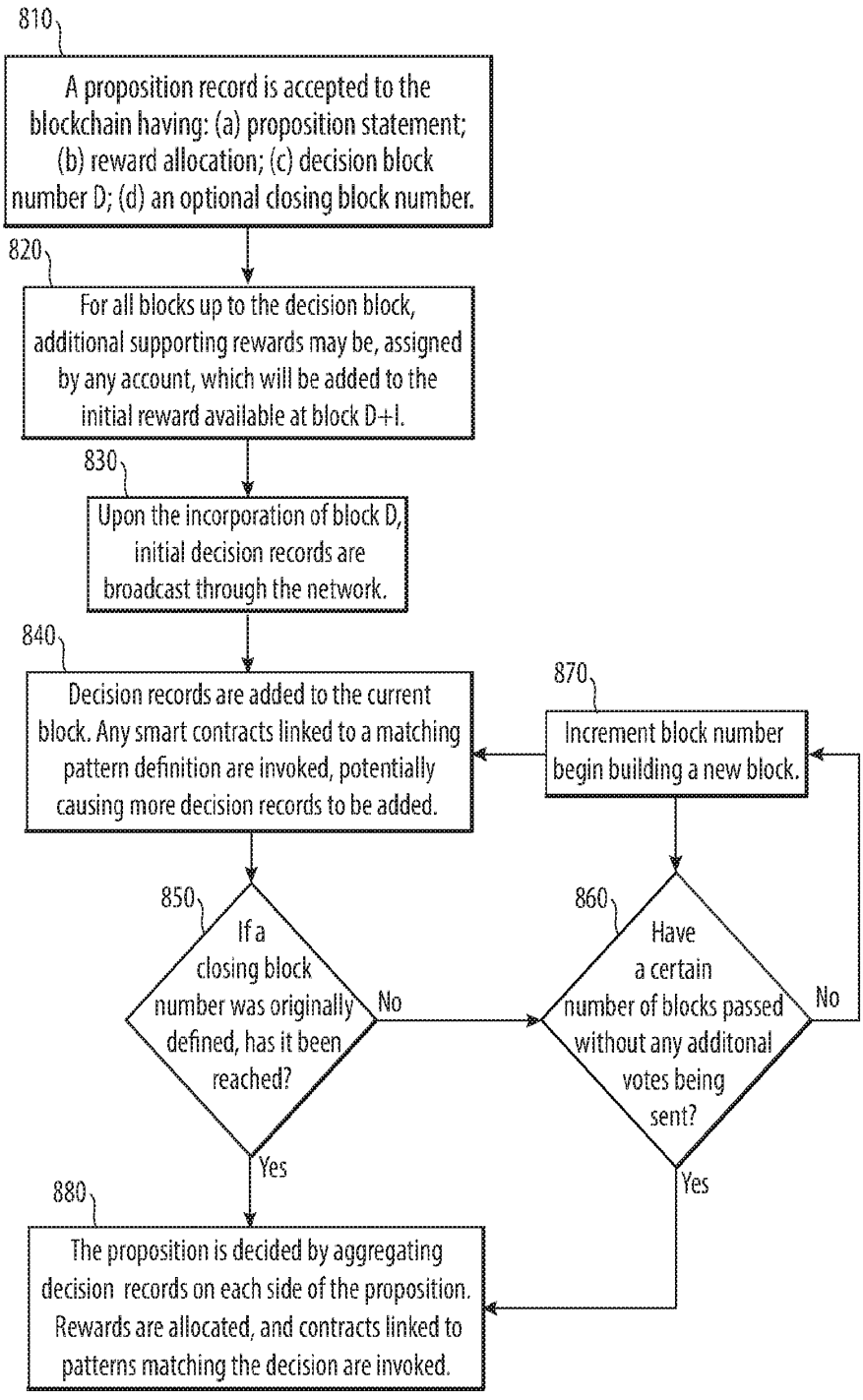
810
A proposition record is accepted to the blockchain having: (a) proposition statement; (b) reward allocation; (c) decision block number D; (d) an optional closing block number.
820
For all blocks up to the decision block, additional supporting rewards may be, assigned by any account, which will be added to the initial reward available at block D+I.
830
Upon the incorporation of block D, initial decision records are broadcast through the network.
840
Decision records are added to the current block. Any smart contracts linked to a matching pattern definition are invoked, potentially causing more decision records to be added.
870
Increment block number begin building a new block.
850
If a closing block number was originally defined, has it been reached?
No
Yes
860
Have a certain number of blocks passed without any additonal votes being sent?
No
Yes
880
The proposition is decided by aggregating decision records on each side of the proposition. Rewards are allocated, and contracts linked to patterns matching the decision are invoked.

FIG. 8

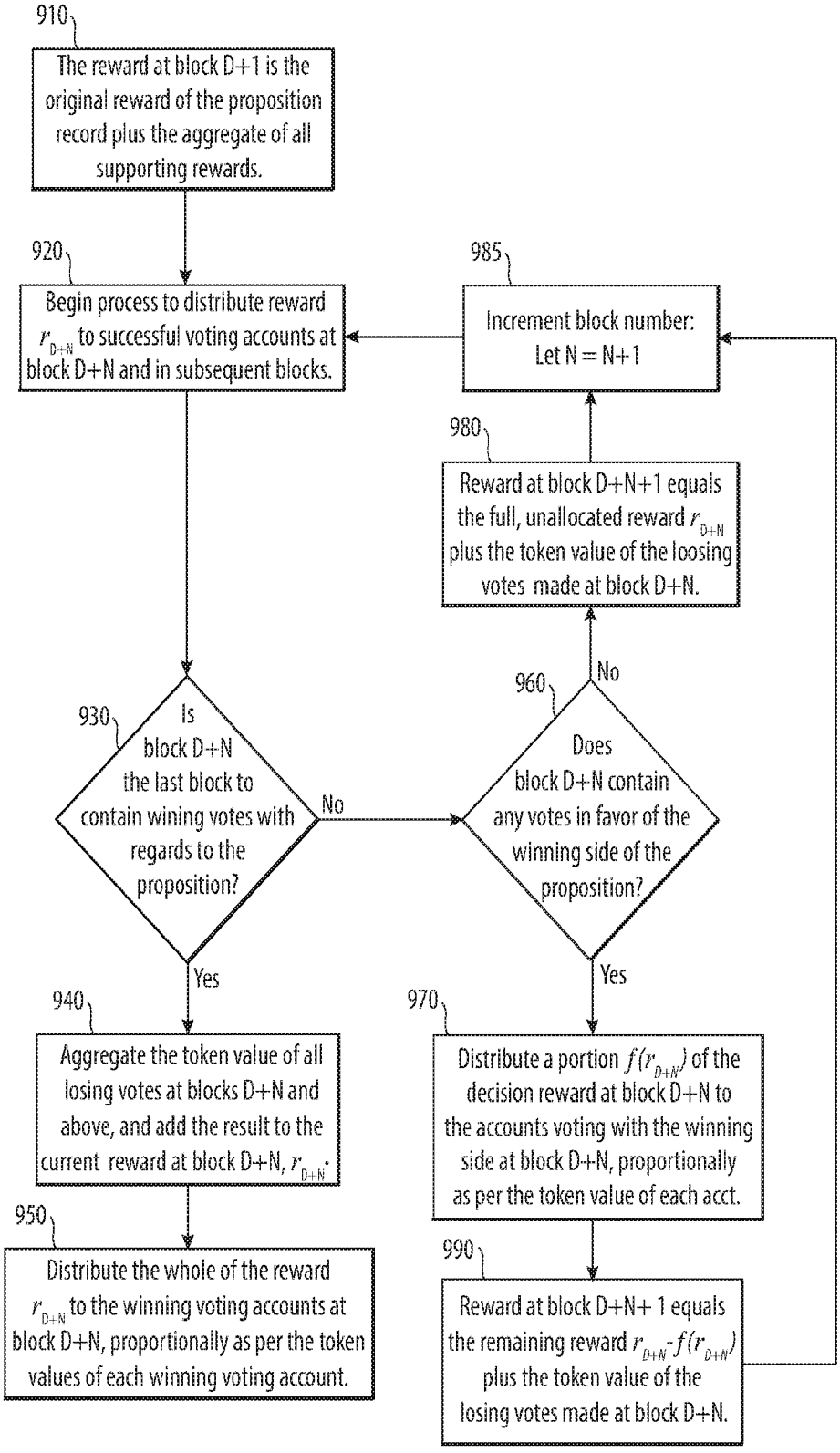
910
The reward at block D+1 is the original reward of the proposition record plus the aggregate of all supporting rewards.
920
Begin process to distribute reward r_{D+N} to successful voting accounts at block D+N and in subsequent blocks.
985
Increment block number: Let N = N+1
980
Reward at block D+N+1 equals the full, unallocated reward r_{D+N} plus the token value of the loosing votes made at block D+N.
930
Is block D+N the last block to contain wining votes with regards to the proposition?
No
960
Does block D+N contain any votes in favor of the winning side of the proposition?
No
Yes
Yes
940
Aggregate the token value of all losing votes at blocks D+N and above, and add the result to the current reward at block D+N, r_{D+N}.
970
Distribute a portion $f(r_{D+N})$ of the decision reward at block D+N to the accounts voting with the winning side at block D+N, proportionally as per the token value of each acct.
950
Distribute the whole of the reward r_{D+N} to the winning voting accounts at block D+N, proportionally as per the token values of each winning voting account.
990
Reward at block D+N+ 1 equals the remaining reward r_{D+N}-$f(r_{D+N})$ plus the token value of the losing votes made at block D+N.

FIG. 9

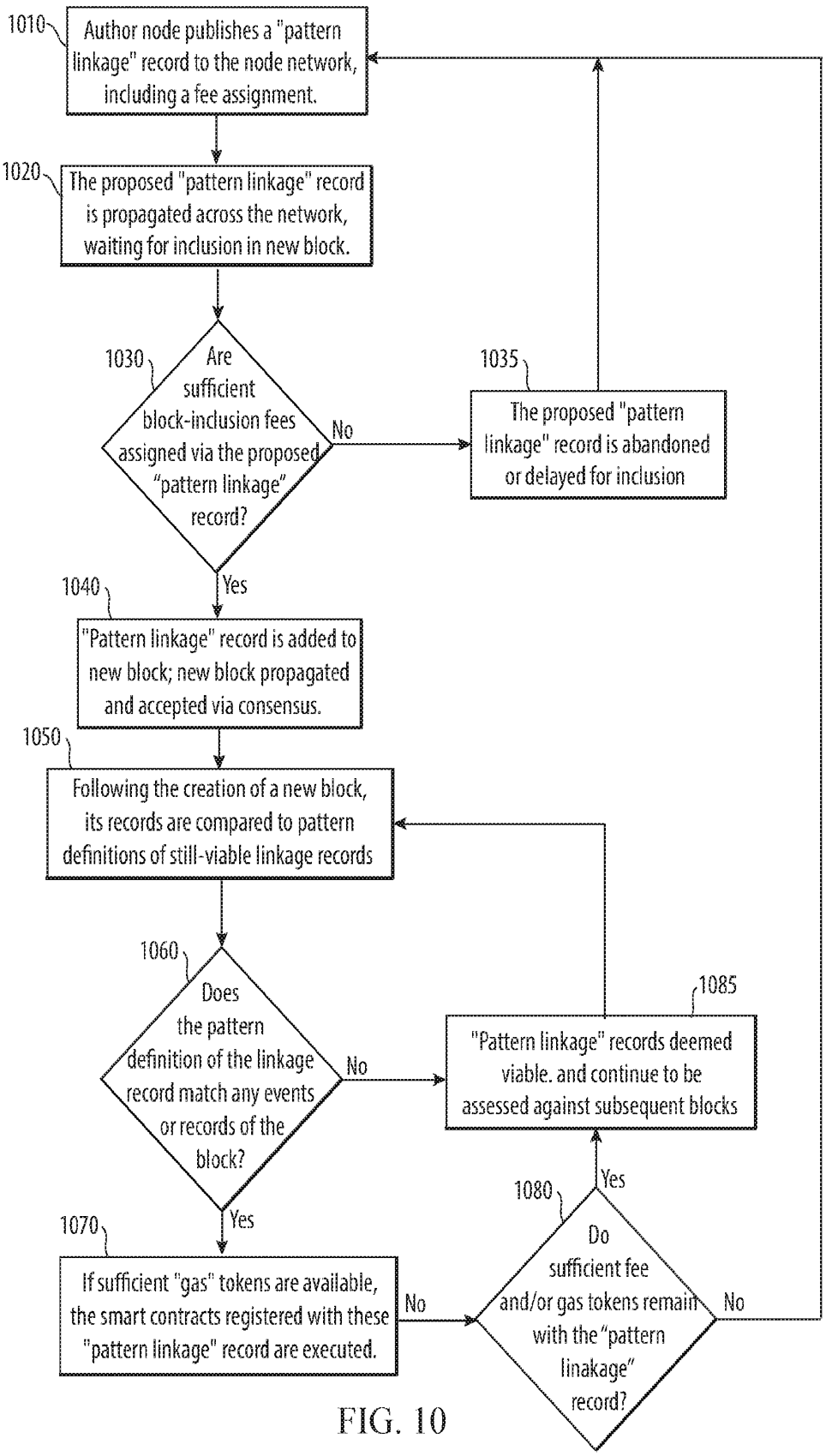
1010
Author node publishes a "pattern linkage" record to the node network, including a fee assignment.
1020
The proposed "pattern linkage" record is propagated across the network, waiting for inclusion in new block.
1030
Are sufficient block-inclusion fees assigned via the proposed "pattern linkage" record?
No
1035
The proposed "pattern linkage" record is abandoned or delayed for inclusion
Yes
1040
"Pattern linkage" record is added to new block; new block propagated and accepted via consensus.
1050
Following the creation of a new block, its records are compared to pattern definitions of still-viable linkage records
1060
Does the pattern definition of the linkage record match any events or records of the block?
No
1085
"Pattern linkage" records deemed viable. and continue to be assessed against subsequent blocks
Yes
1070
If sufficient "gas" tokens are available, the smart contracts registered with these "pattern linkage" record are executed.
No
1080
Do sufficient fee and/or gas tokens remain with the "pattern linakage" record?
Yes
No

FIG. 10

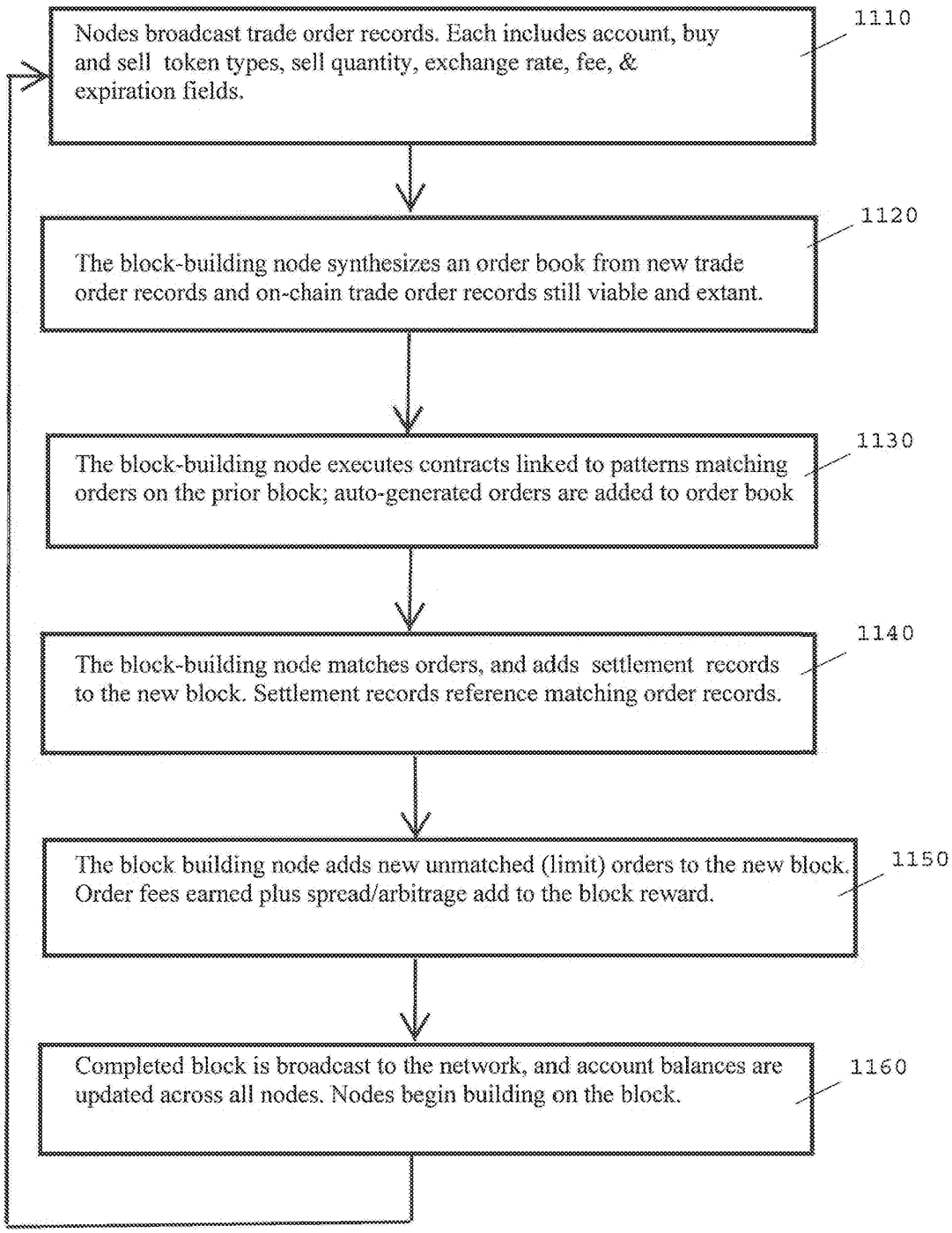
Nodes broadcast trade order records. Each includes account, buy and sell token types, sell quantity, exchange rate, fee, & expiration fields.
1110
The block-building node synthesizes an order book from new trade order records and on-chain trade order records still viable and extant.
1120
The block-building node executes contracts linked to patterns matching orders on the prior block; auto-generated orders are added to order book
1130
The block-building node matches orders, and adds settlement records to the new block. Settlement records reference matching order records.
1140
The block building node adds new unmatched (limit) orders to the new block. Order fees earned plus spread/arbitrage add to the block reward.
1150
Completed block is broadcast to the network, and account balances are updated across all nodes. Nodes begin building on the block.
1160

FIG. 11

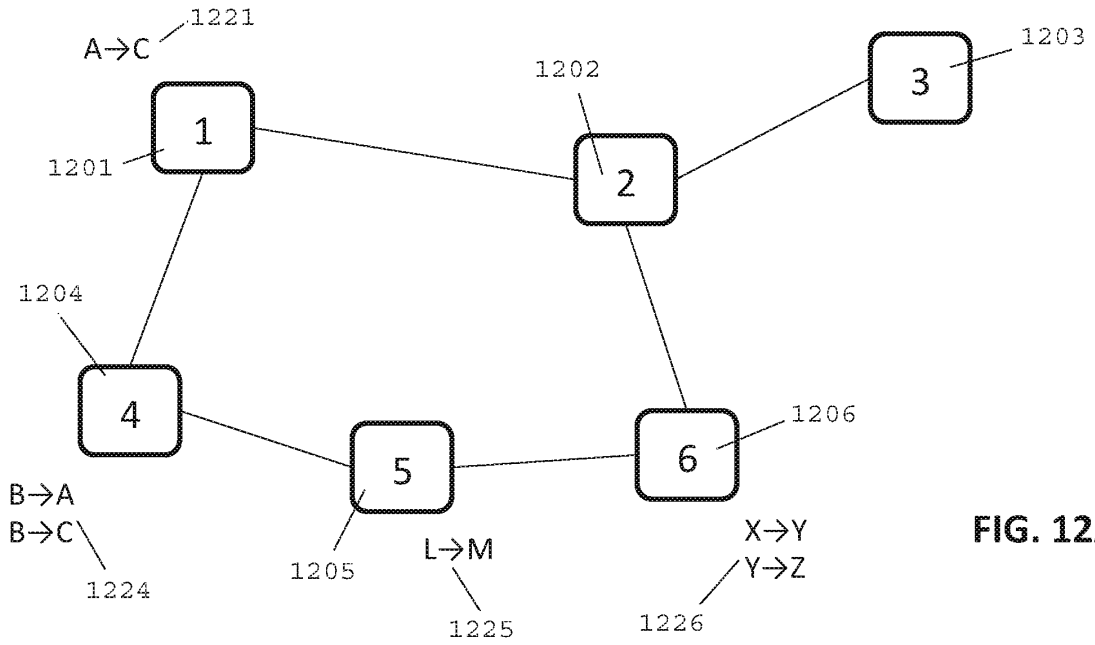

FIG. 12A

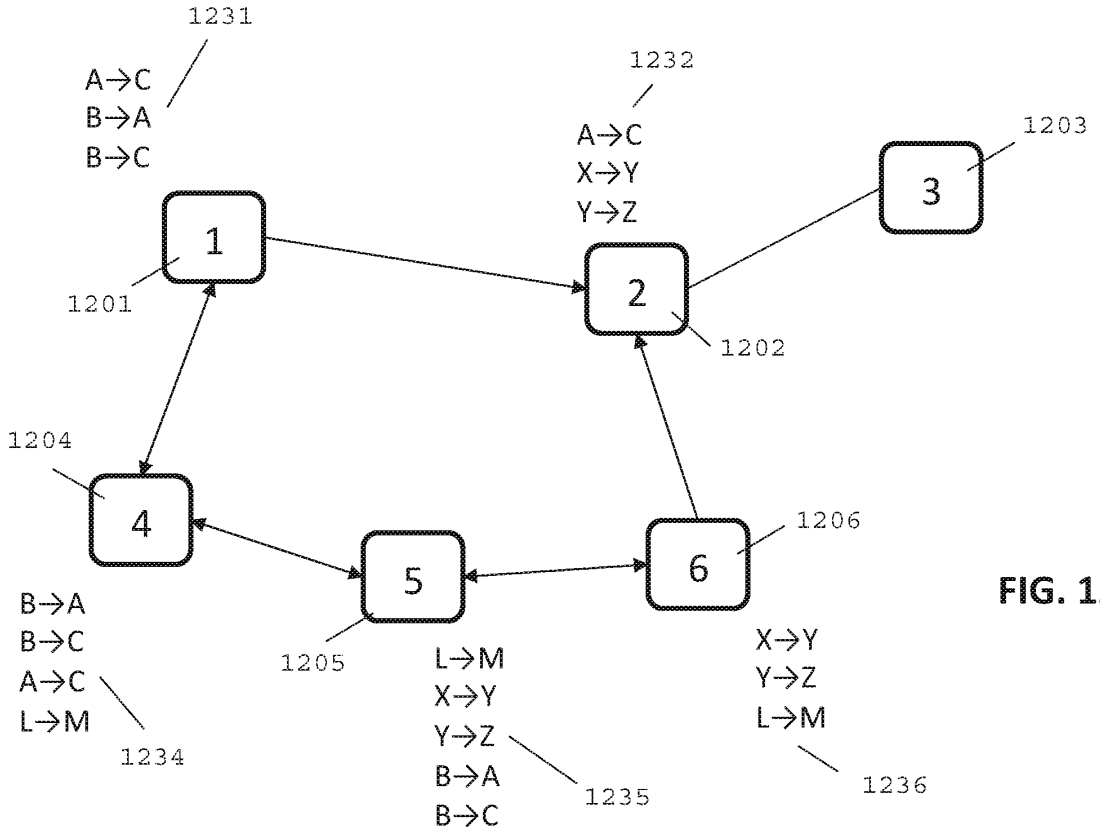

FIG. 12B

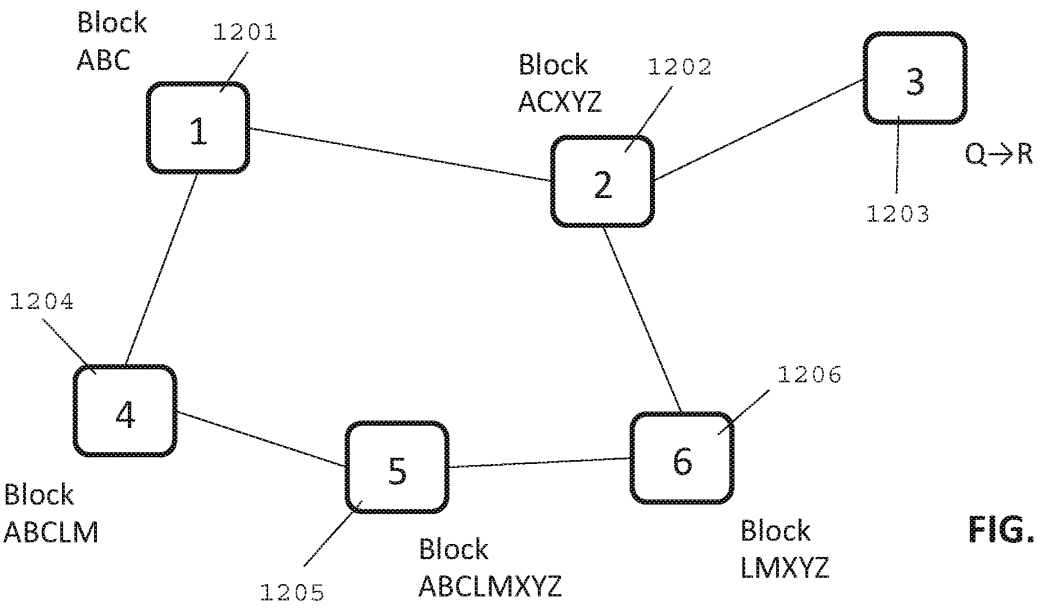

FIG. 12C

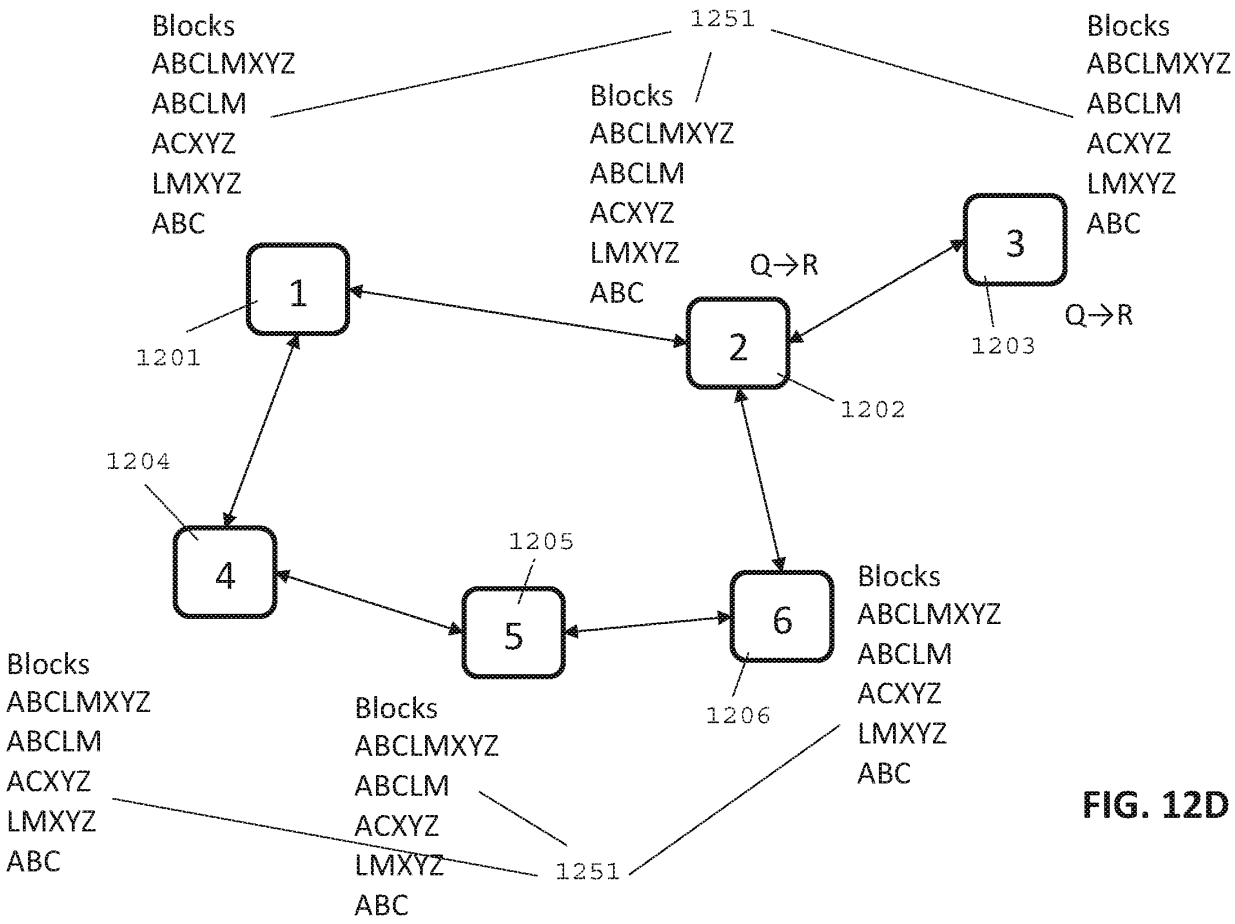

FIG. 12D

Block with Bloom Filter	Included Records	Fitness (No. of Records)
ABCLMXYZ	L→M, X→Y, Y→Z, B→A, B→C	5
ABCLM	B→A, B→C, A→C, L→M	4
ACXYZ	A→C, X→Y, Y→Z	3
LMXYZ	X→Y, Y→Z, L→M	3
ABC	A→C, B→A, B→C	3

FIG. 13A

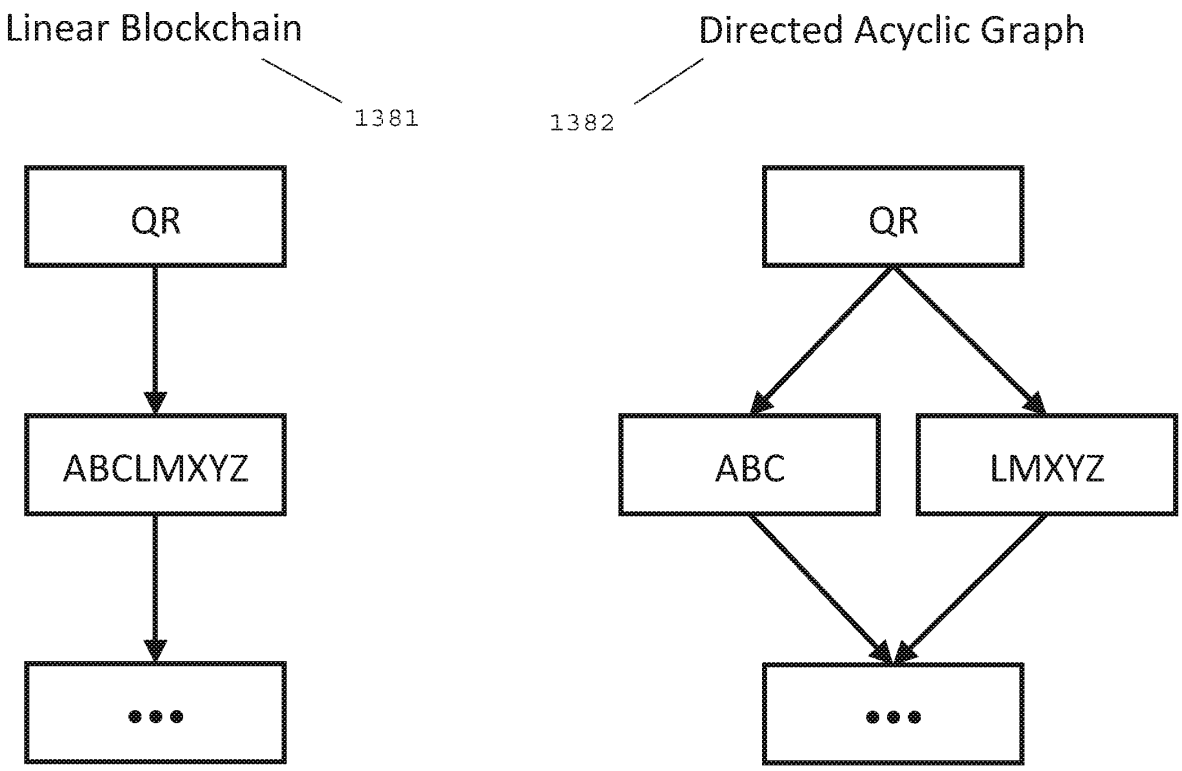

FIG. 13B