(12) INTERNATIONAL APPLICATION PUBLISHED UNDER THE PATENT COOPERATION TREATY (PCT)

(19) World Intellectual Property Organization
International Bureau

(43) International Publication Date
22 May 2003 (22.05.2003)

PCT

(10) International Publication Number
WO 03/042981 A1

(51) International Patent Classification[7]: G10L 19/14, 21/02

(21) International Application Number: PCT/JP02/11226

(22) International Filing Date: 29 October 2002 (29.10.2002)

(25) Filing Language: English

(26) Publication Language: English

(30) Priority Data:
2001-348411 14 November 2001 (14.11.2001) JP

(71) Applicant: MATSUSHITA ELECTRIC INDUSTRIAL CO., LTD. [JP/JP]; 1006, Oaza Kadoma, Kadoma-shi, Osaka 571-8501 (JP).

(72) Inventors: MIYASAKA, Shuji; 19-4, Narita-cho, Neyagawa-shi, Osaka 572-0004 (JP). ISHIKAWA, Tomokazu; 6-14, Sanwa-cho 4-chome, Toyonaka-shi, Osaka 561-0828 (JP). SAWADA, Yoshiaki; Sanhaitsuchihara II 201, 7-26, Shimohozumi 4-chome, Ibaraki-shi, Osaka 567-0041 (JP).

(74) Agent: NII, Hiromori; c/o NII Patent Firm, 3rd Floor, Shin-Osaka Suehiro Center Bldg., 11-26, Nishinakajima 3-chome Yodogawa-ku, Osaka-shi, Osaka 532-0011 (JP).

(81) Designated States *(national)*: AU, BR, CA, CN, ID, IN, KR, MX, PH, SG.

(84) Designated States *(regional)*: European patent (DE, ES, FI, FR, GB, IT, NL, SE).

Published:
— *with international search report*
— *with amended claims and statement*

For two-letter codes and other abbreviations, refer to the "Guidance Notes on Codes and Abbreviations" appearing at the beginning of each regular issue of the PCT Gazette.

(54) Title: AUDIO CODING AND DECODING

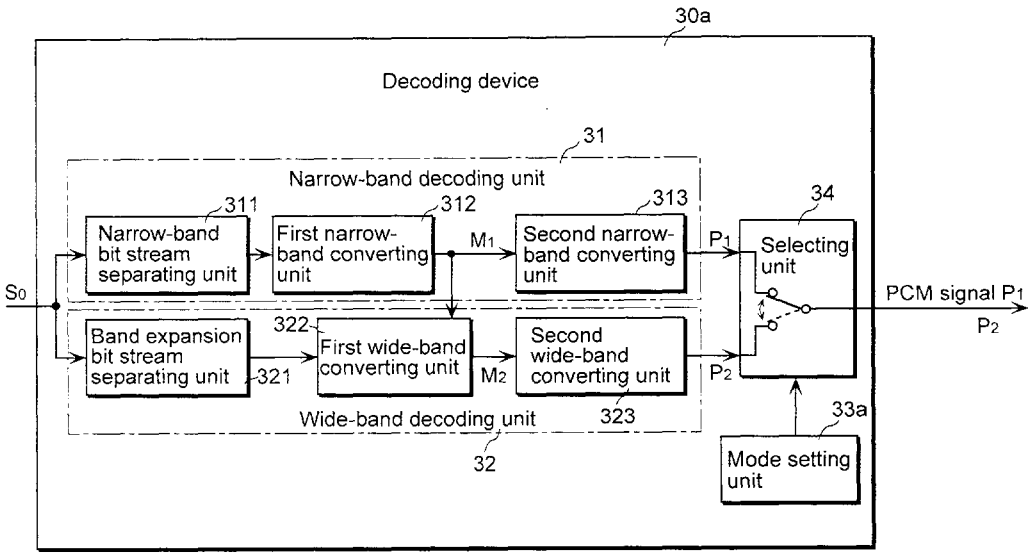

(57) Abstract: A decoding device (30a) comprises a narrow-band decoding unit (31) operable to reproduce a PCM signal (P1) from a narrow-band bit stream included in a wide-band bit stream (S0), a wide-band decoding unit (32) operable to reproduce a PCM signal (P2) having a frequency band which is wider than that of the PCM signal (P1) reproduced by the narrow-band decoding unit (31) from the narrow-band bit stream and a band expanding bit stream included in the wide band bit stream (S0) and a selecting unit (34) operable to select either the PCM signal (P1) reproduced by the narrow-band decoding unit (31) or the PCM signal (P2) reproduced by the wide-band decoding unit (32), and to output the selected sound digital signal.

WO 03/042981 A1