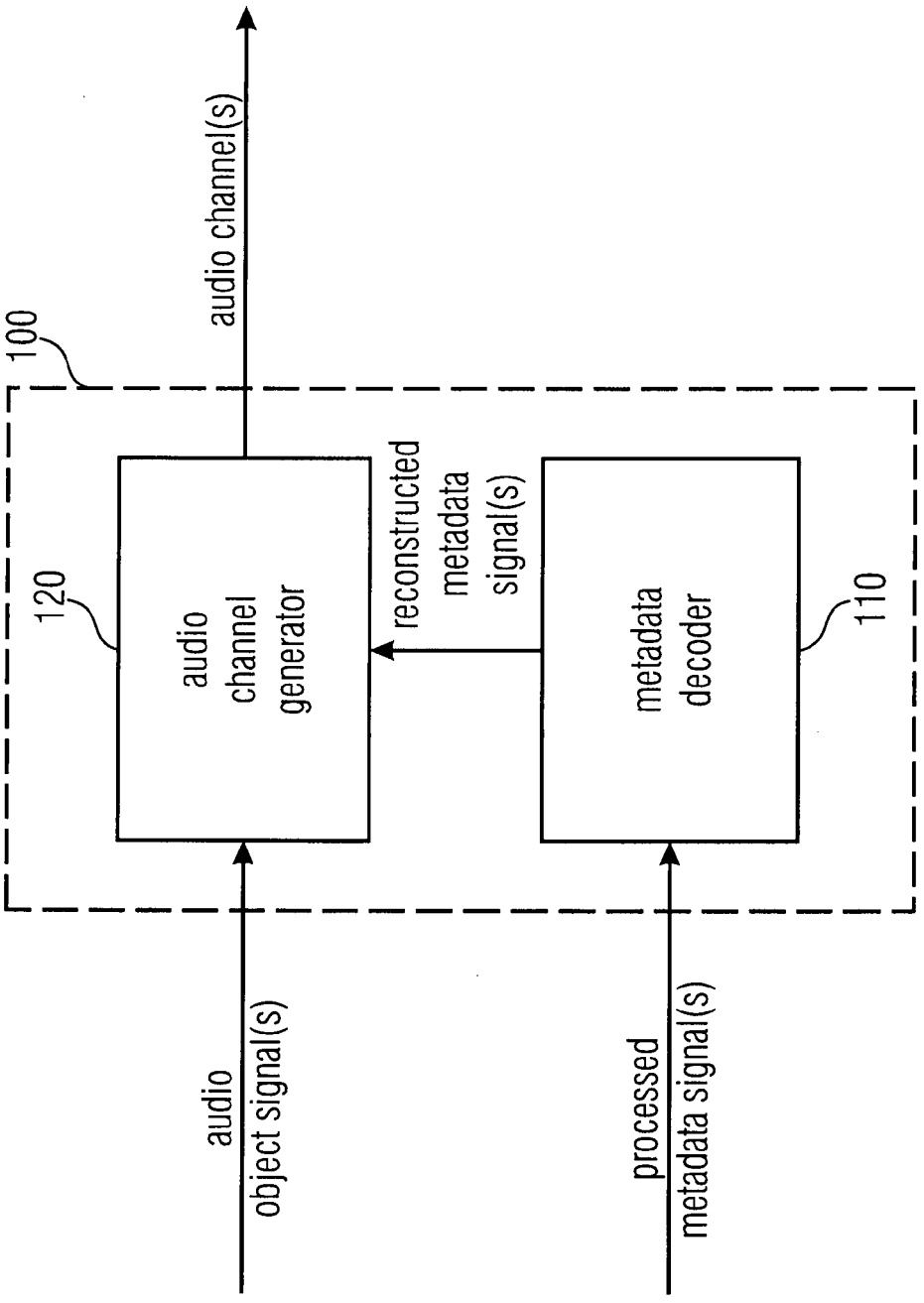
audio channel(s)
100
120
audio channel generator
reconstructed metadata signal(s)
metadata decoder
110
audio object signal(s)
processed metadata signal(s)

FIGURE 1

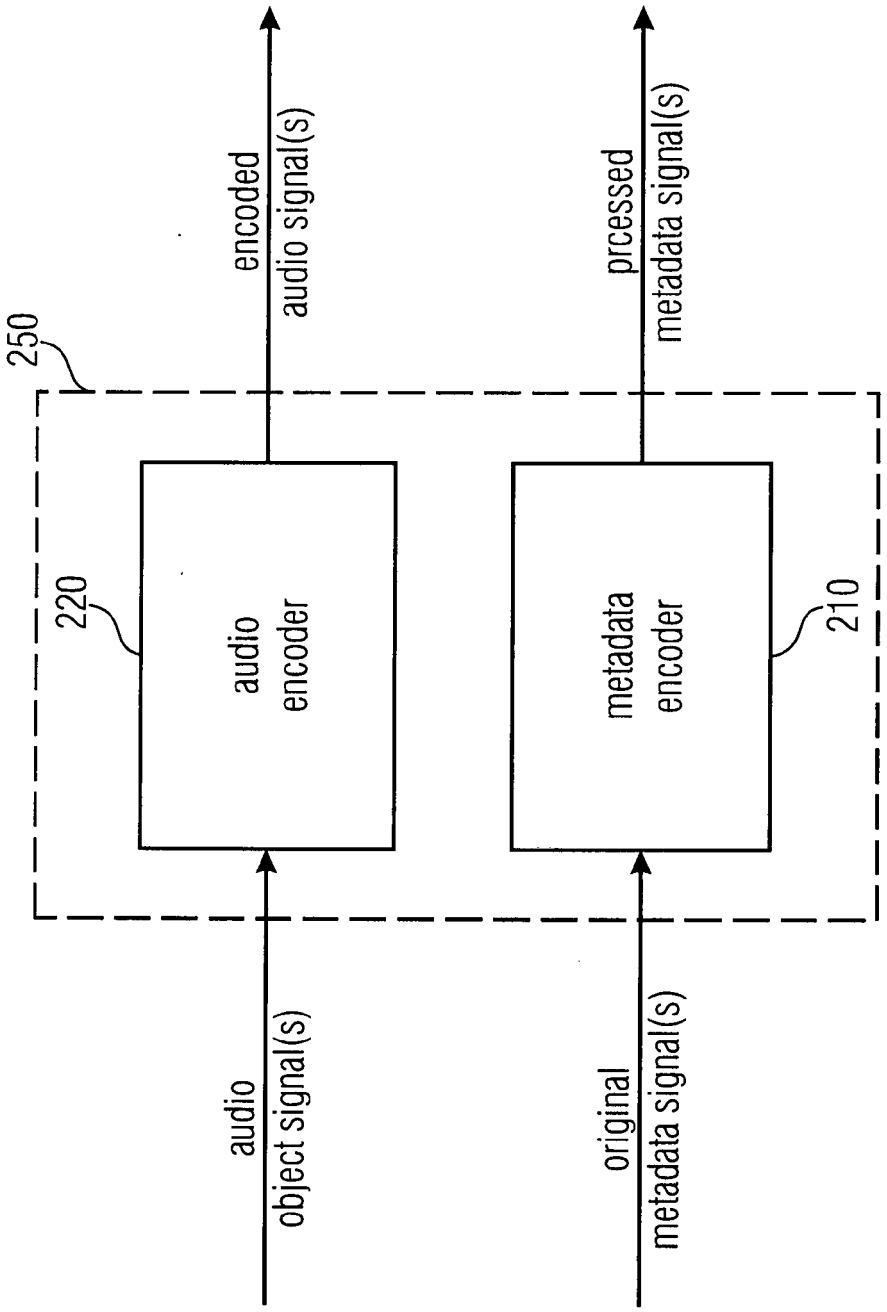
250
encoded
audio signal(s)
prcessed
metadata signal(s)
220
audio
encoder
metadata
encoder
210
audio
object signal(s)
original
metadata signal(s)

FIGURE 2

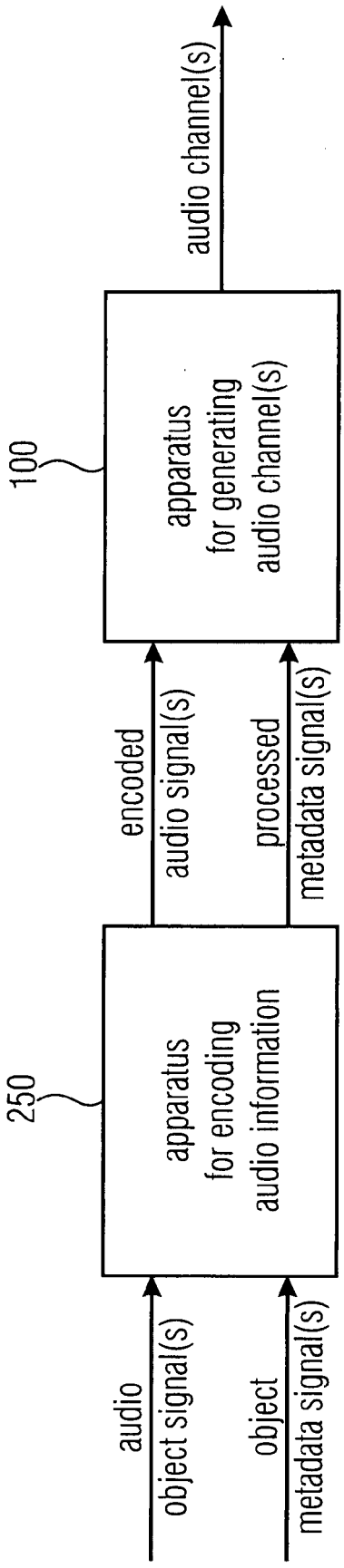
audio channel(s)
100
apparatus for generating audio channel(s)
encoded audio signal(s)
processed metadata signal(s)
250
apparatus for encoding audio information
audio object signal(s)
object metadata signal(s)

FIGURE 3

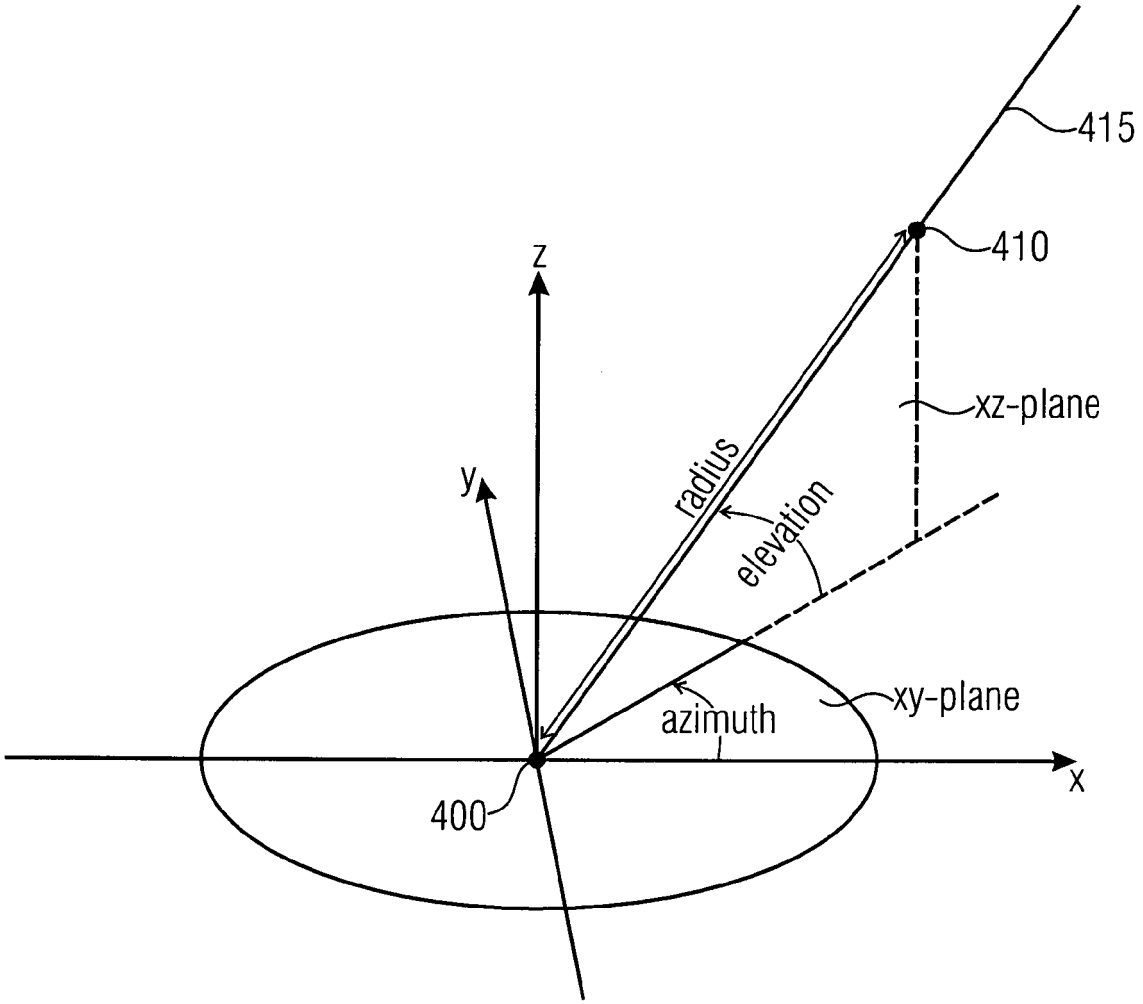

FIGURE 4

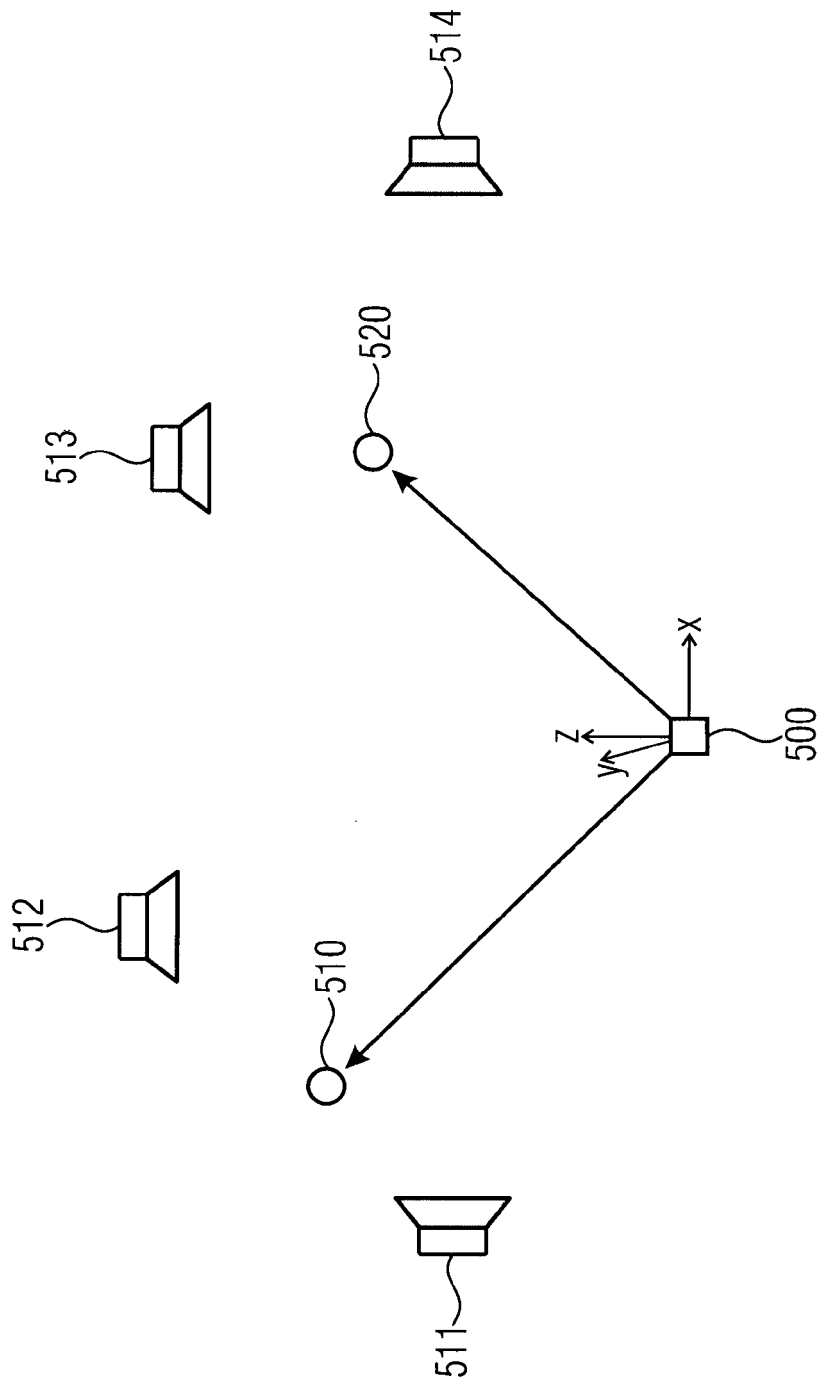

FIGURE 5

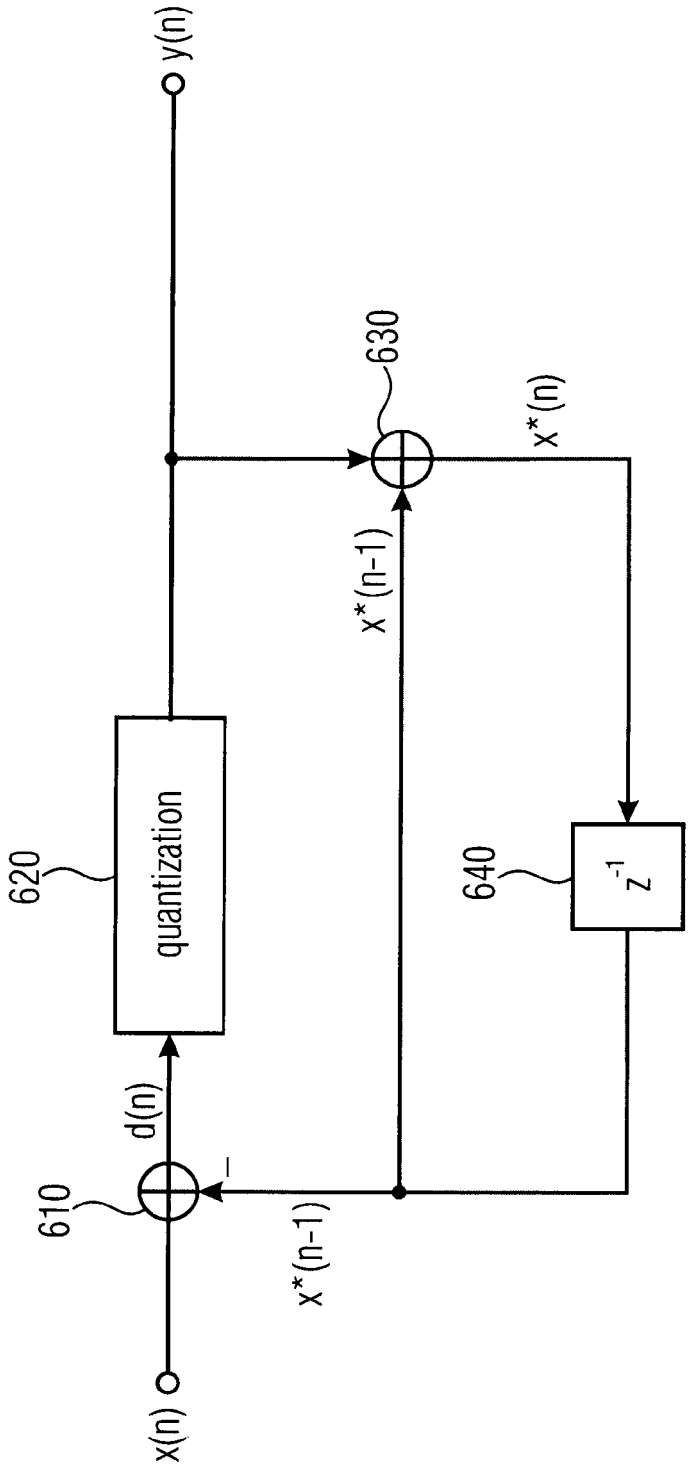

FIGURE 6

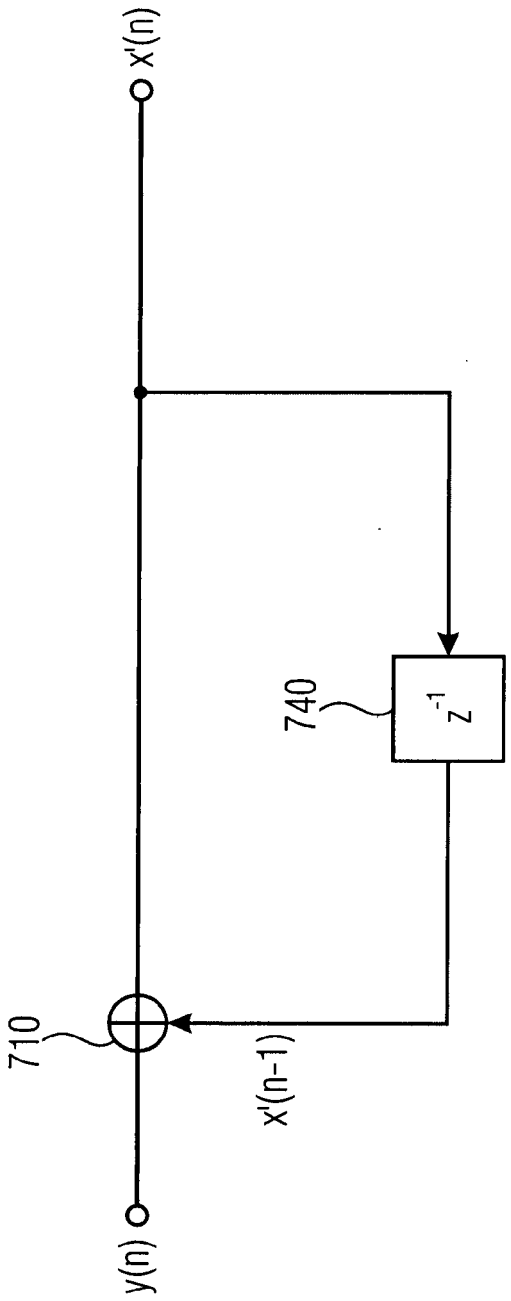

FIGURE 7

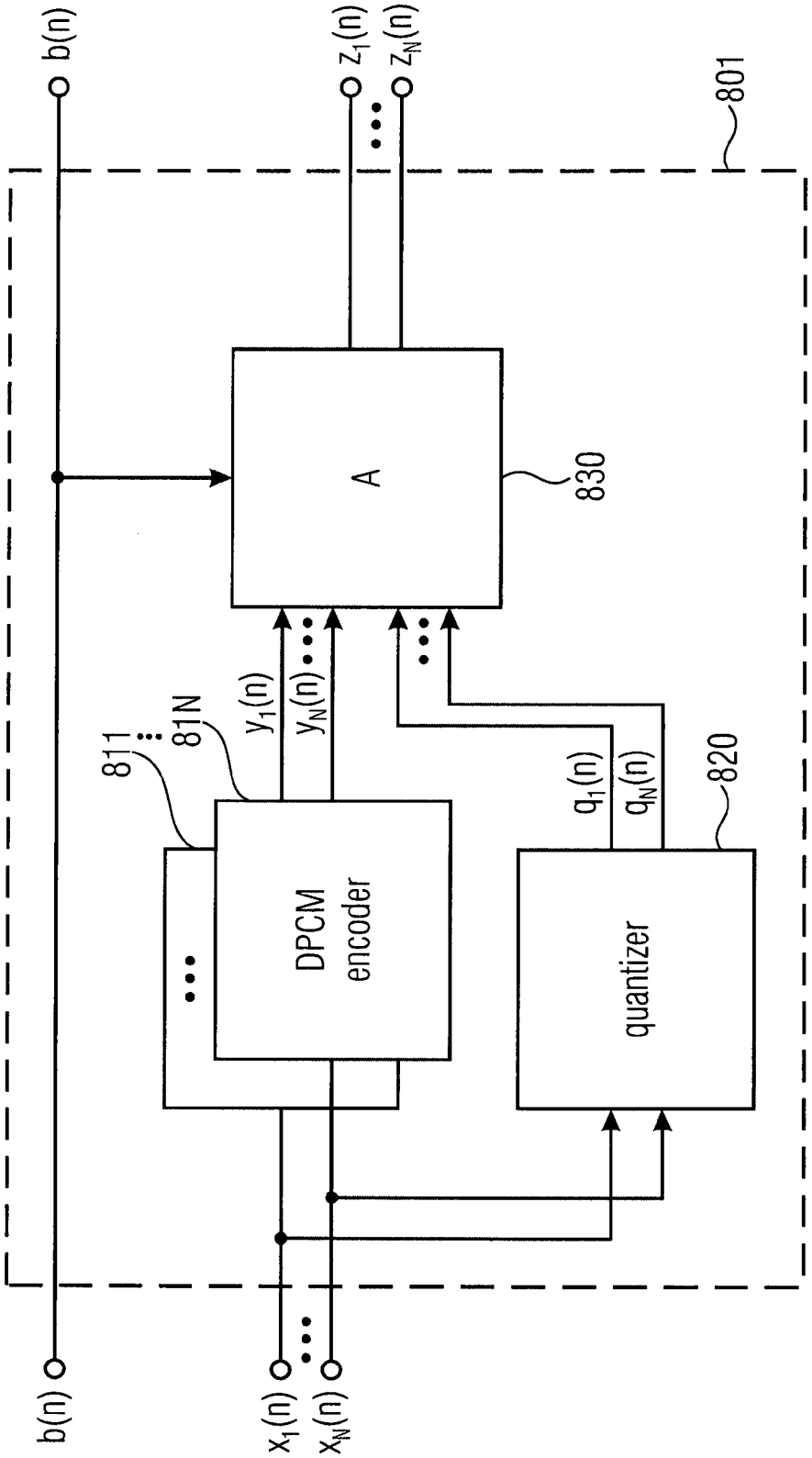
b(n)
$z_1(n)$
$z_N(n)$
801
A
830
811
81N
$y_1(n)$
$y_N(n)$
DPCM encoder
$q_1(n)$
$q_N(n)$
820
quantizer
b(n)
$x_1(n)$
$x_N(n)$

FIGURE 8A

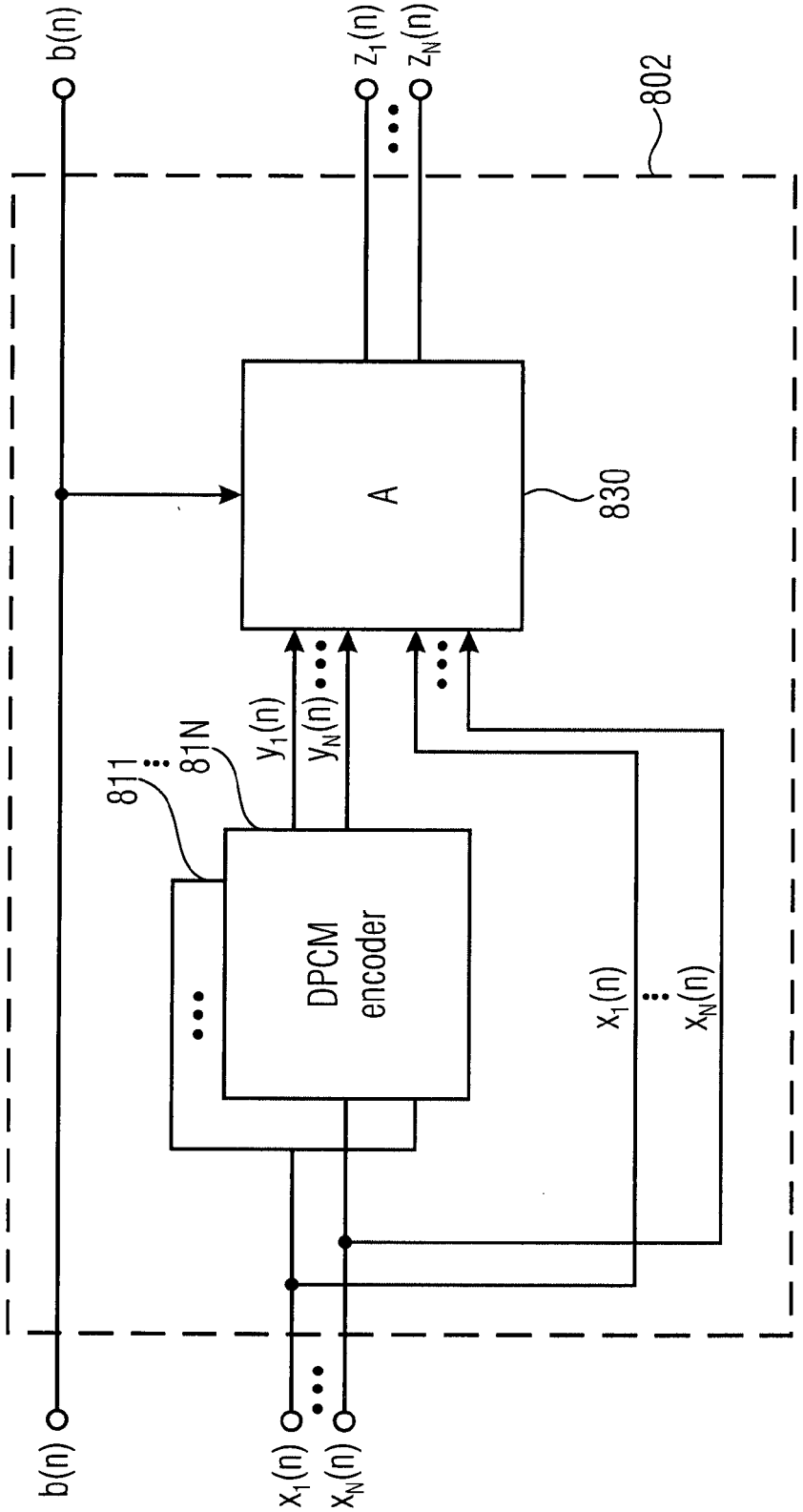
b(n)
$z_1(n)$
$z_N(n)$
802
A
830
811
81N
$y_1(n)$
$y_N(n)$
DPCM encoder
$x_1(n)$
$x_N(n)$
b(n)
$x_1(n)$
$x_N(n)$

FIGURE 8B

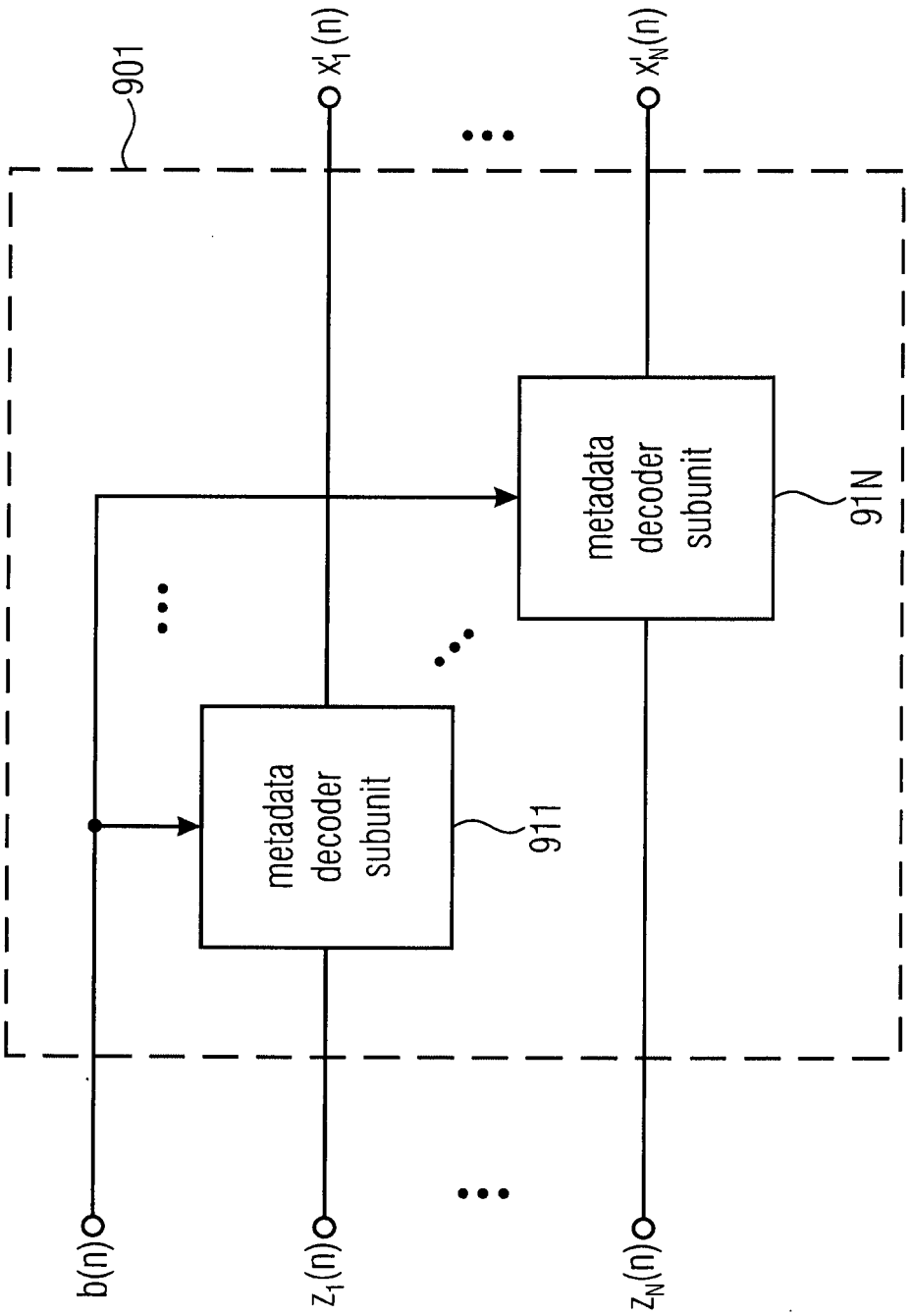
901
$x'_1(n)$
$x'_N(n)$
metadata decoder subunit
91N
metadata decoder subunit
911
b(n)
$z_1(n)$
$z_N(n)$

FIGURE 9A

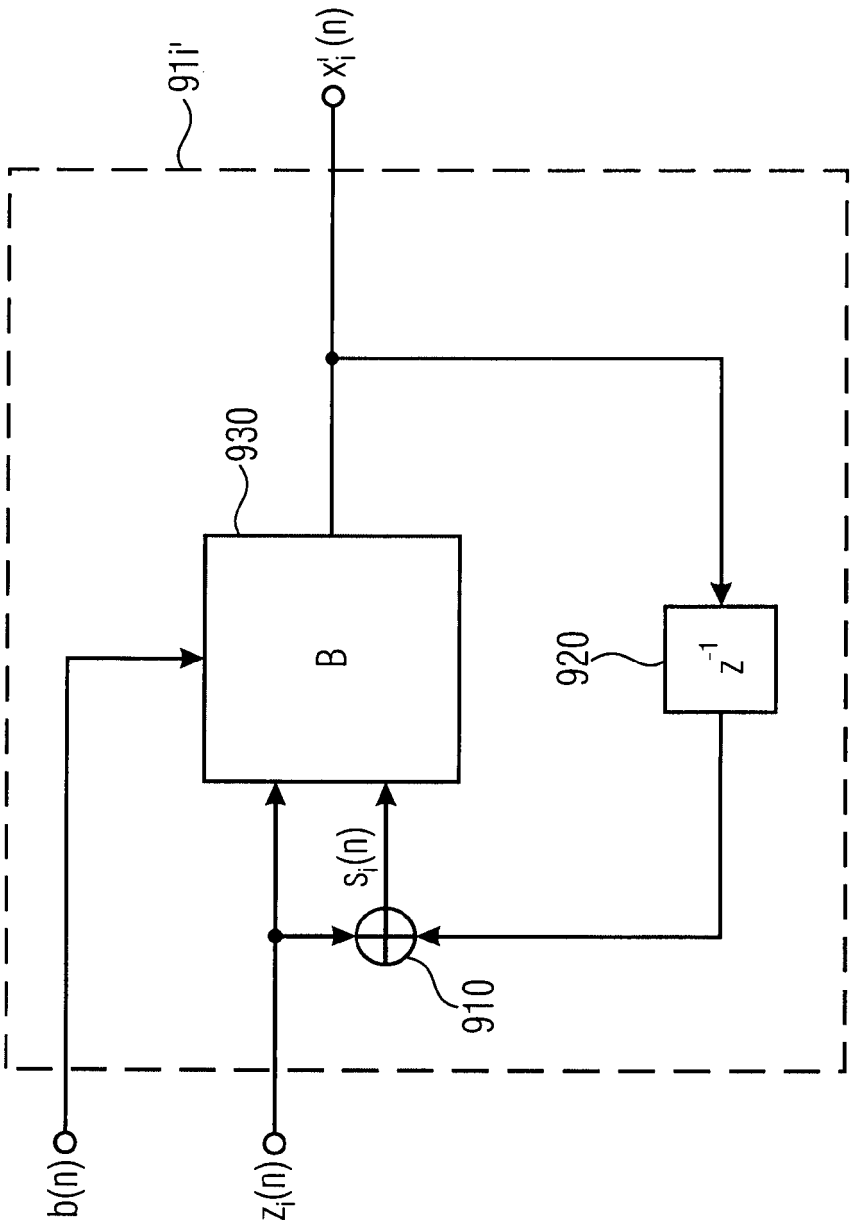

FIGURE 9B

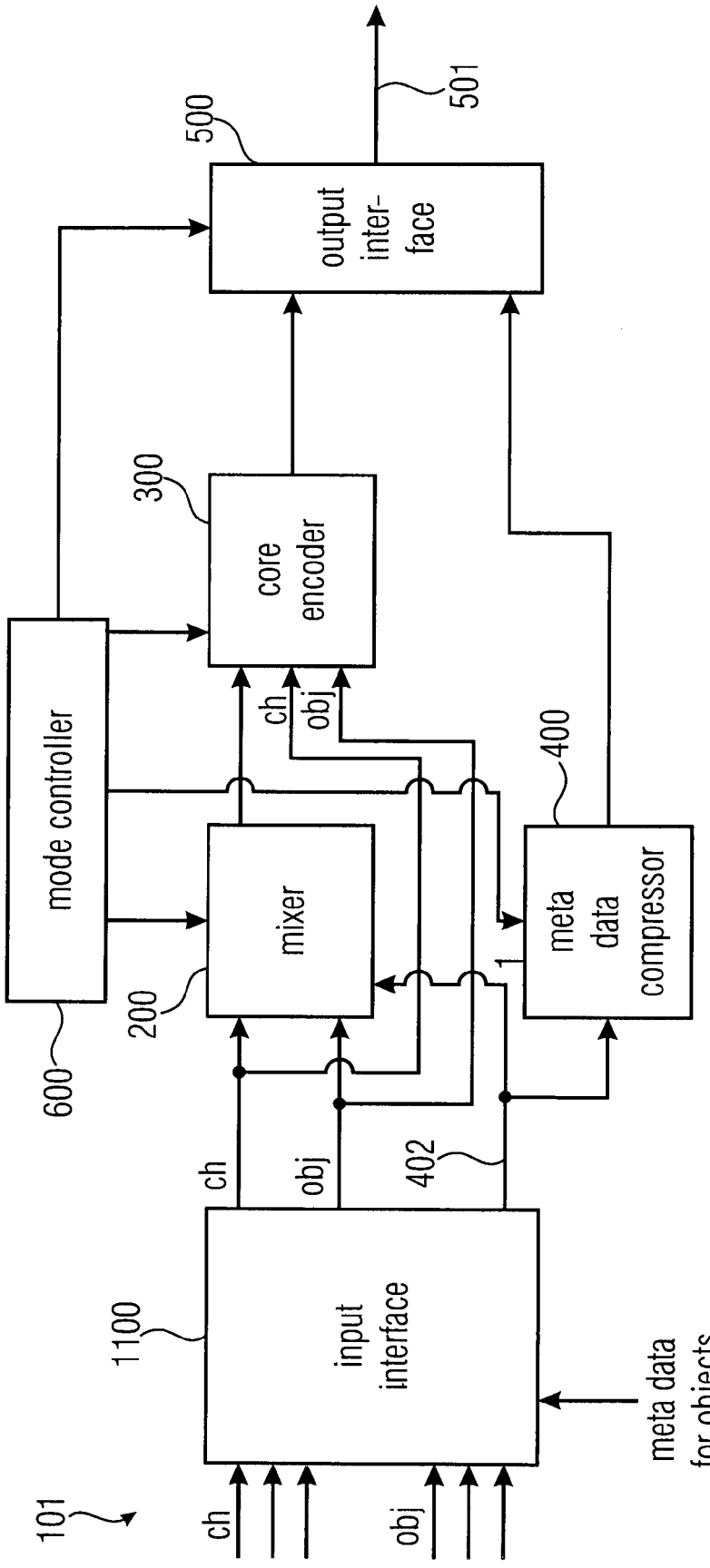

FIGURE 10
(ENCODER)

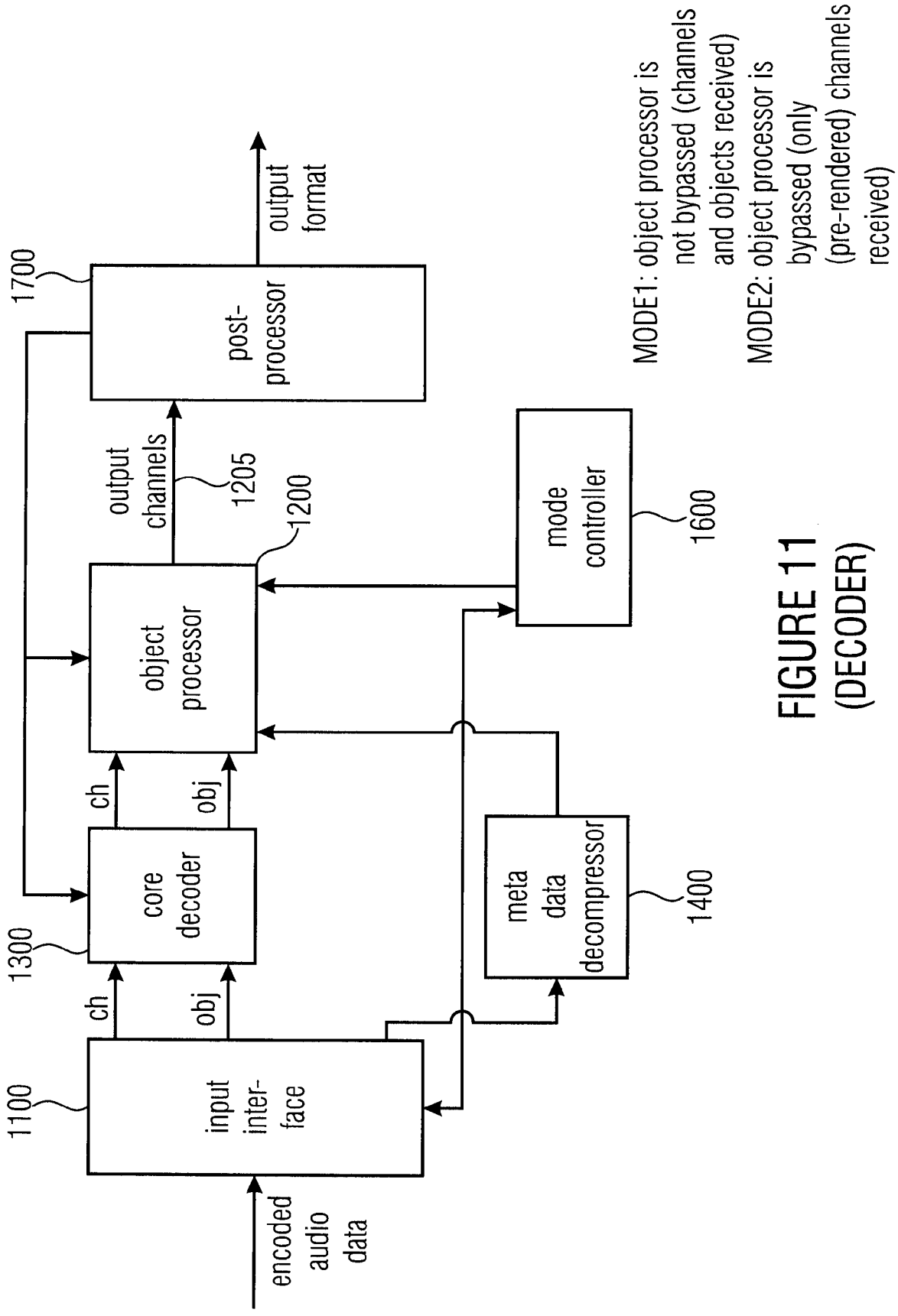

FIGURE 11
(DECODER)

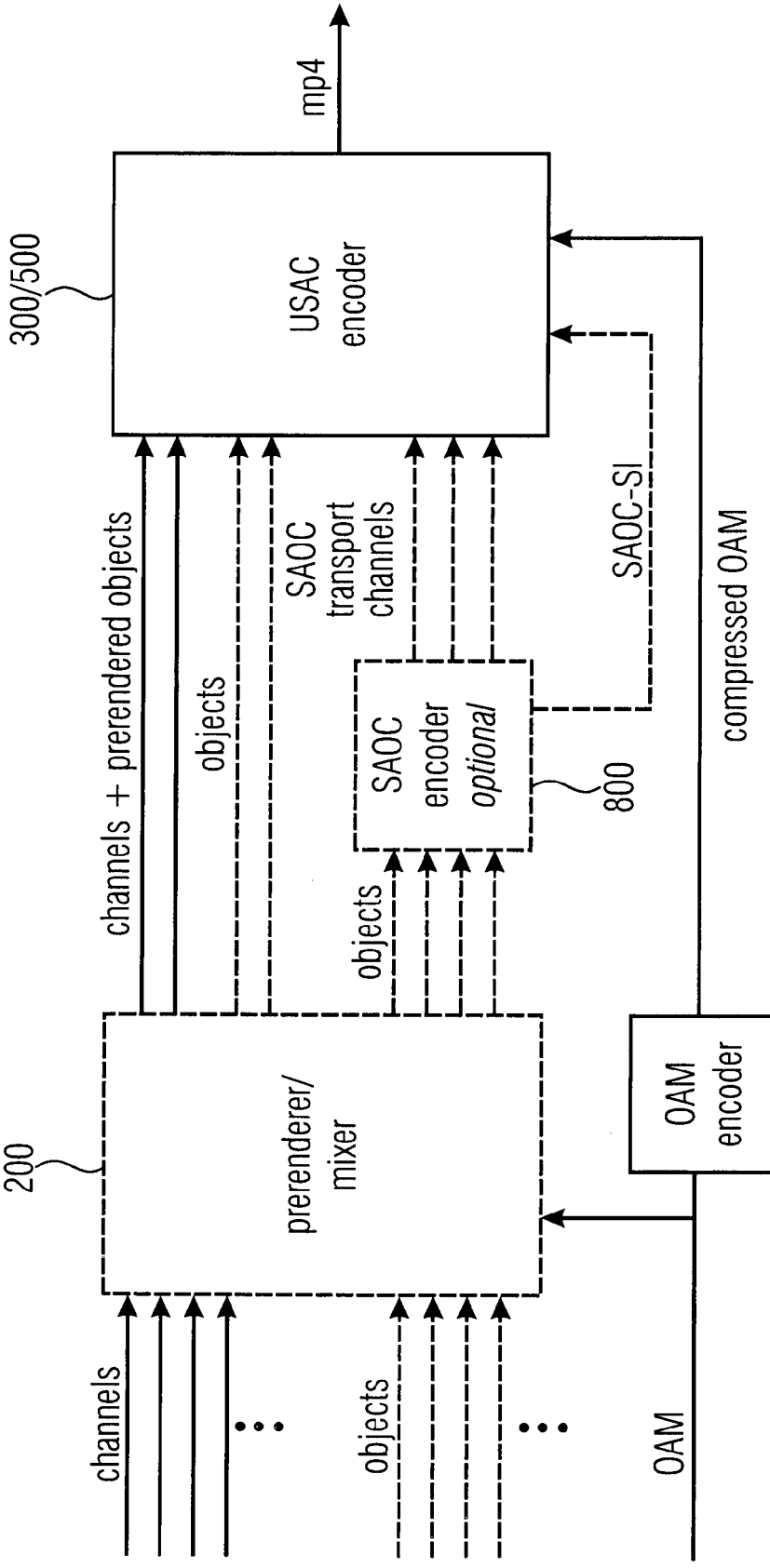

FIGURE 12
(ENCODER)

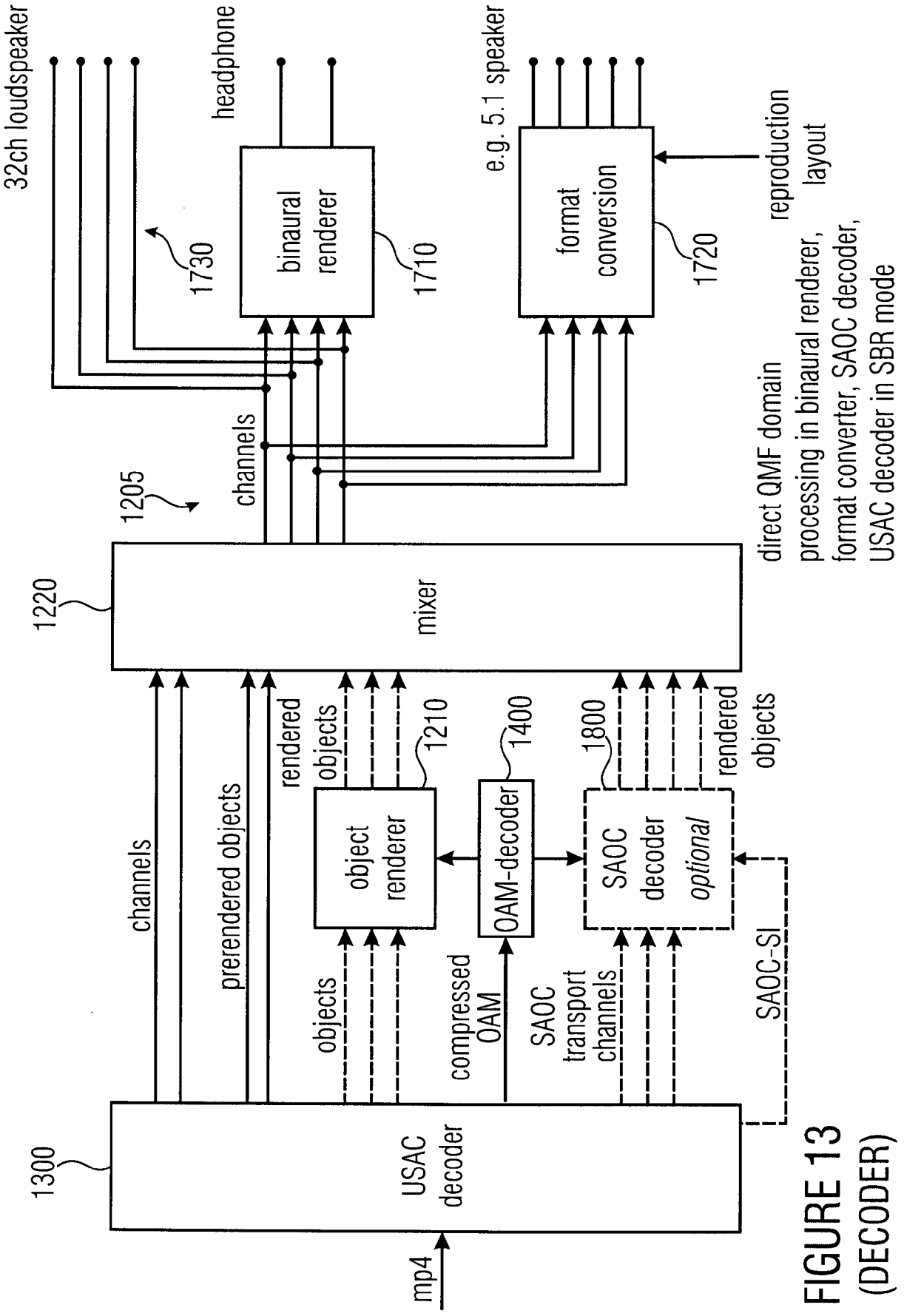

FIGURE 13
(DECODER)

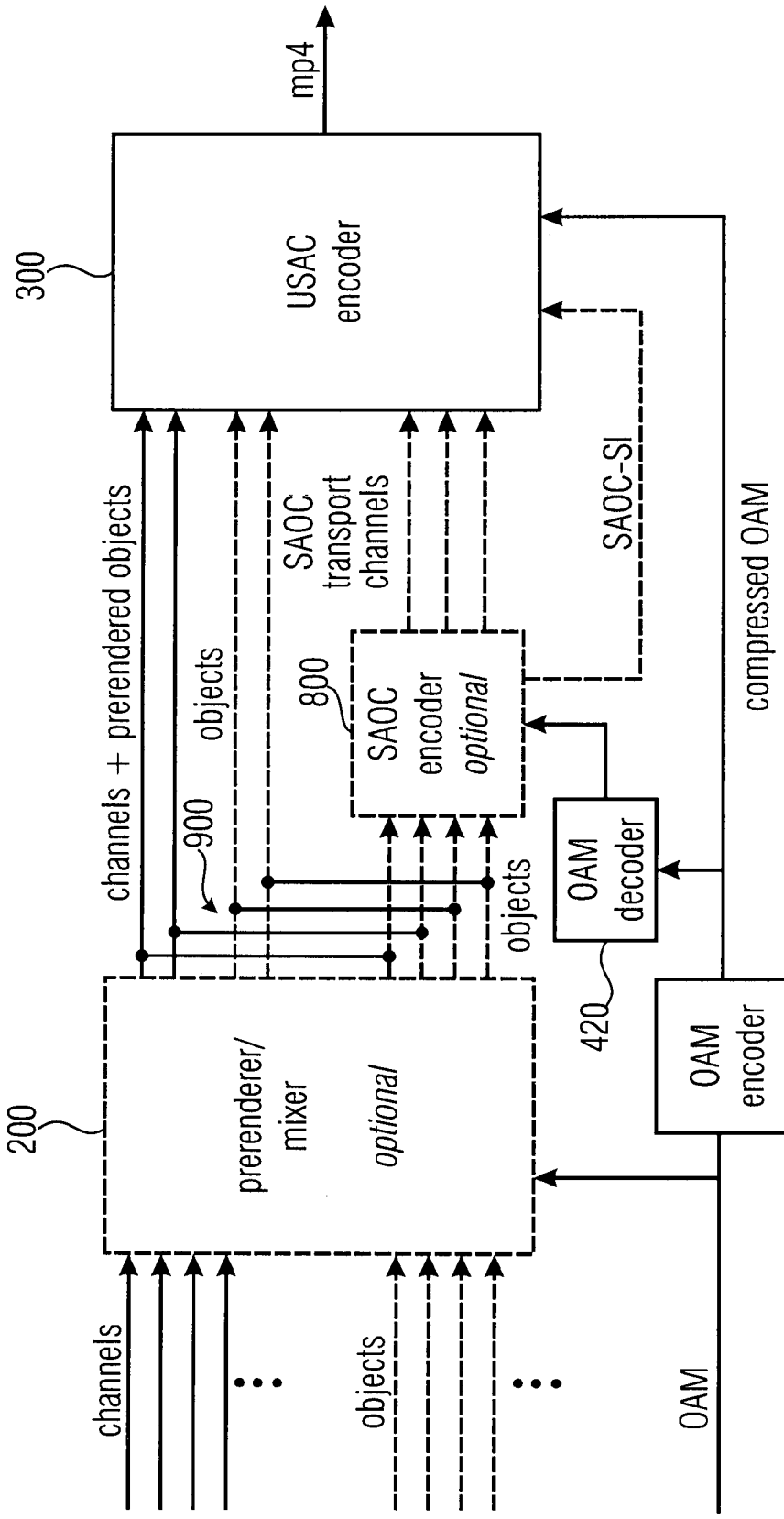

FIGURE 14
(ENCODER)

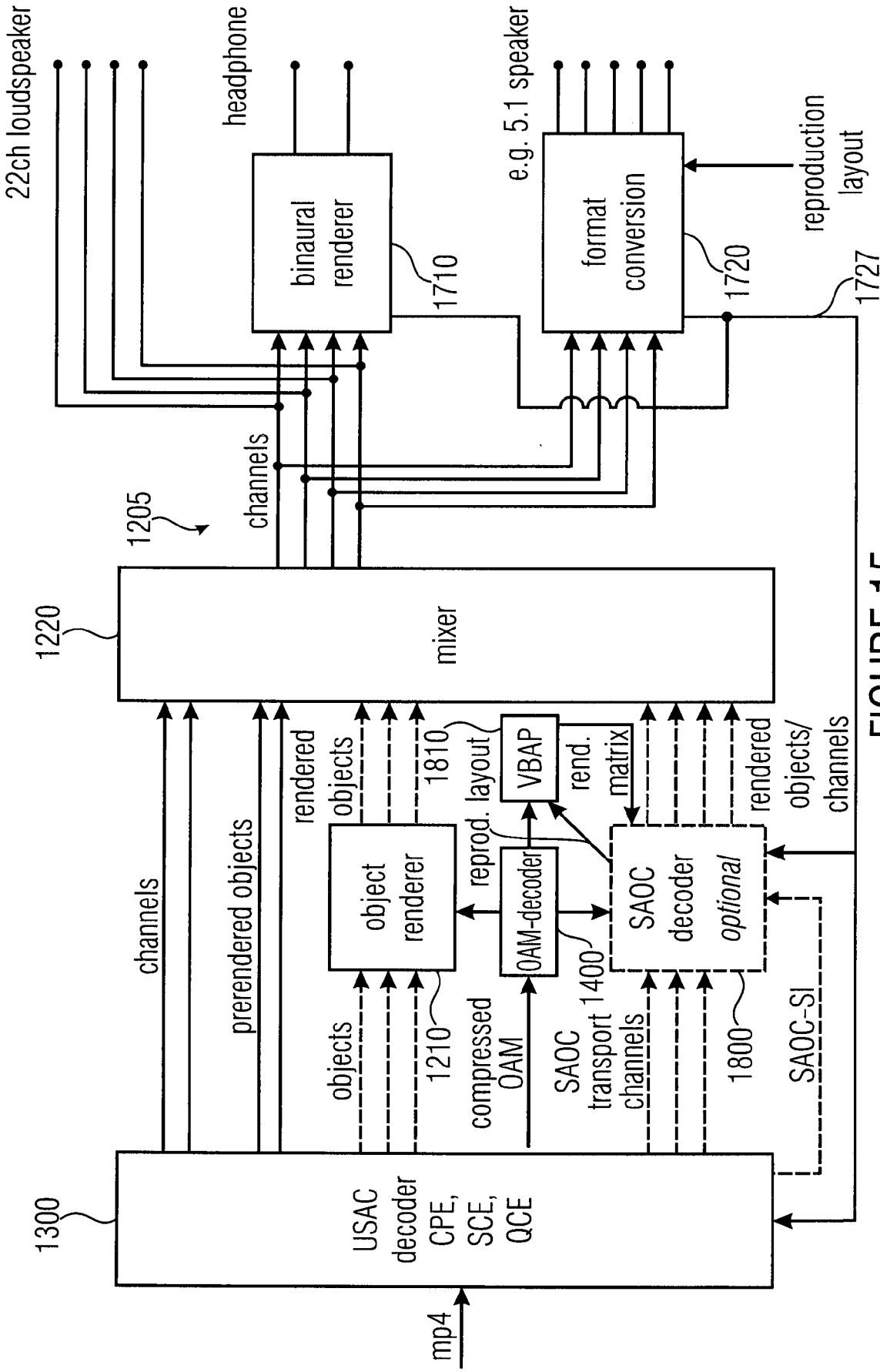

FIGURE 15
(DECODER)