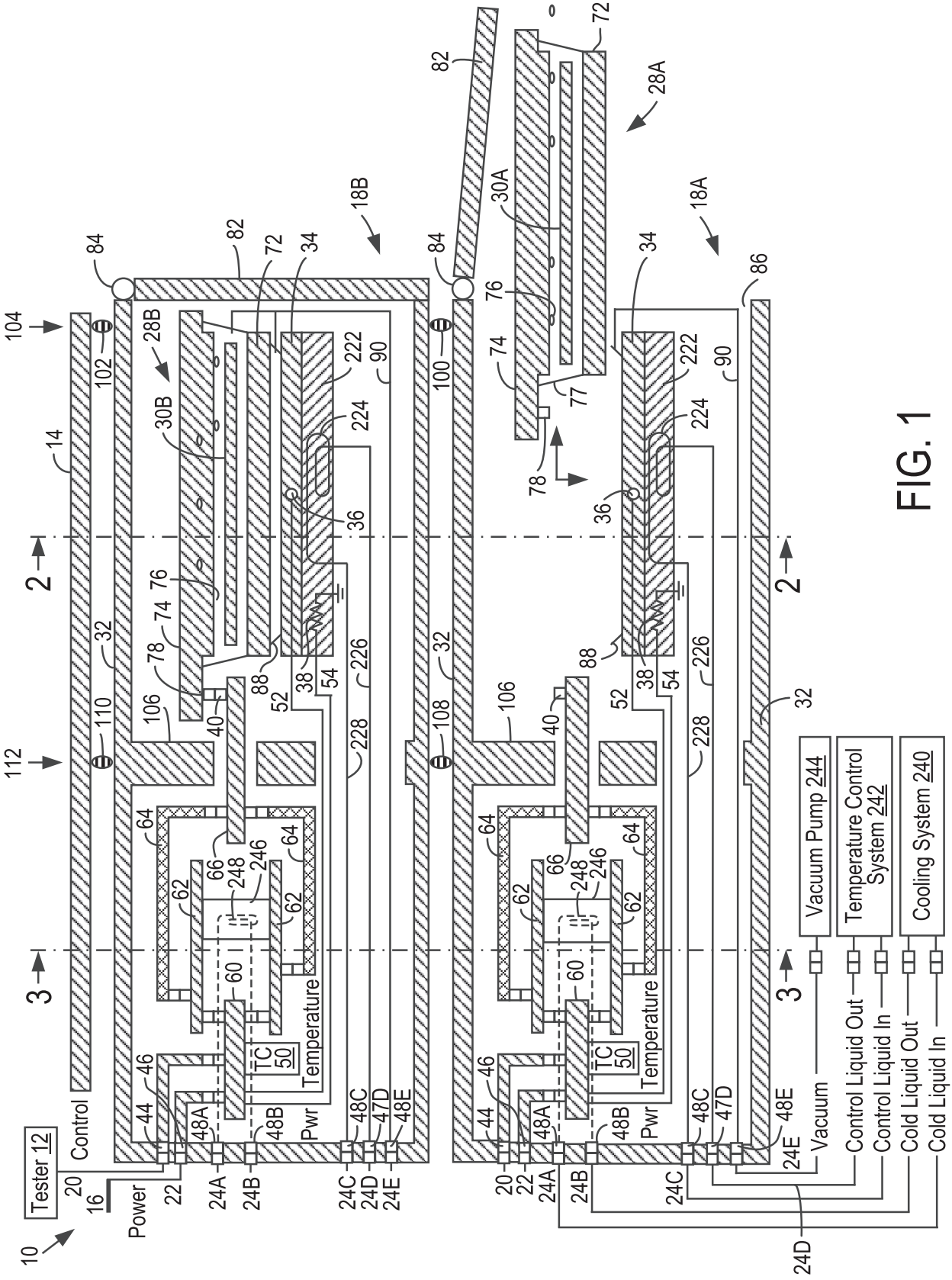
Tester 12
Control
Power
Pwr
Temperature
TC
50
Vacuum Pump 244
Temperature Control System 242
Cooling System 240
Vacuum
Control Liquid Out
Control Liquid In
Cold Liquid Out
Cold Liquid In
18A
18B
28A
28B
30A
30B

FIG. 1

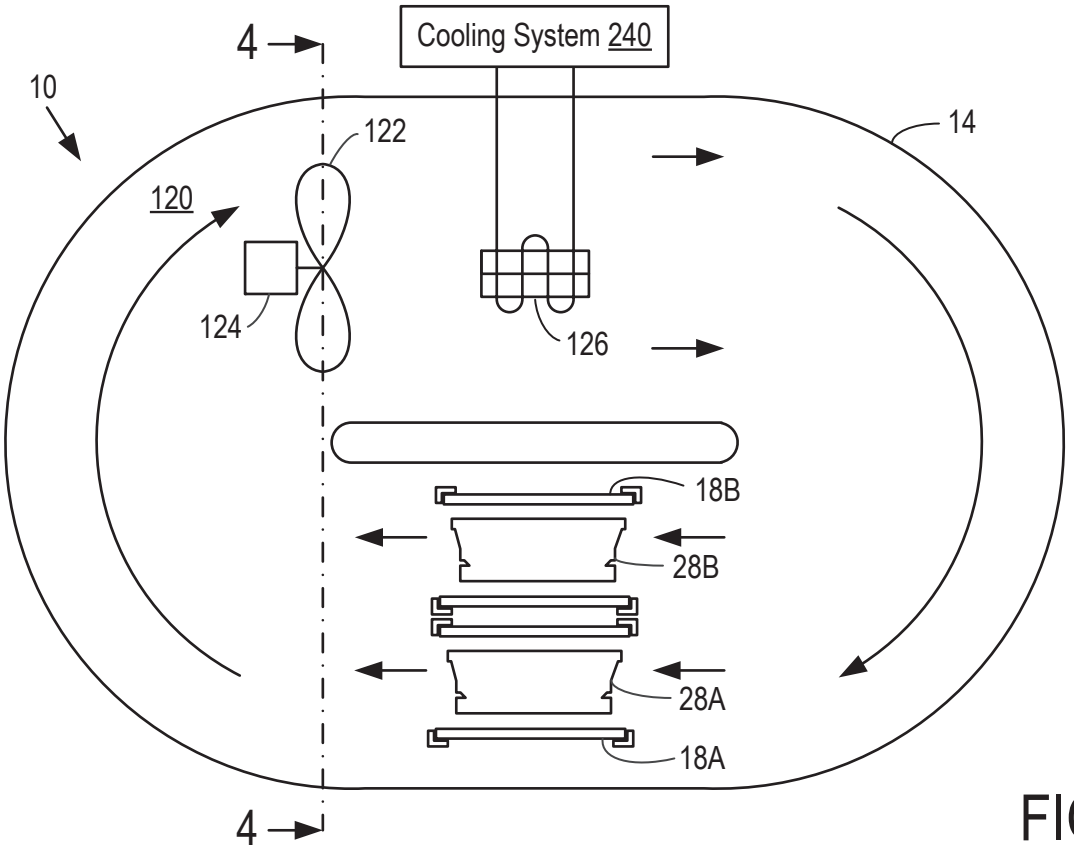
Cooling System 240
4
10
122
14
120
124
126
18B
28B
28A
18A
4

FIG. 2

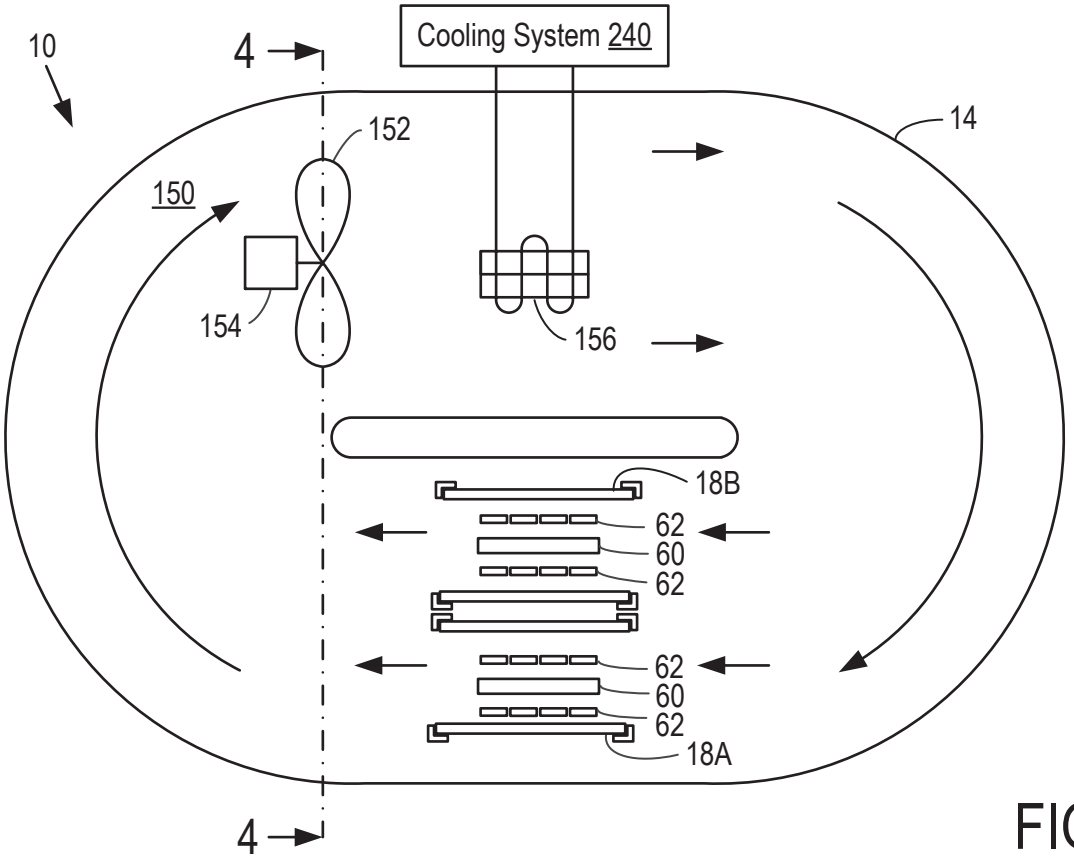
Cooling System 240
4
10
152
14
150
154
156
18B
62
60
62
62
60
62
18A
4

FIG. 3

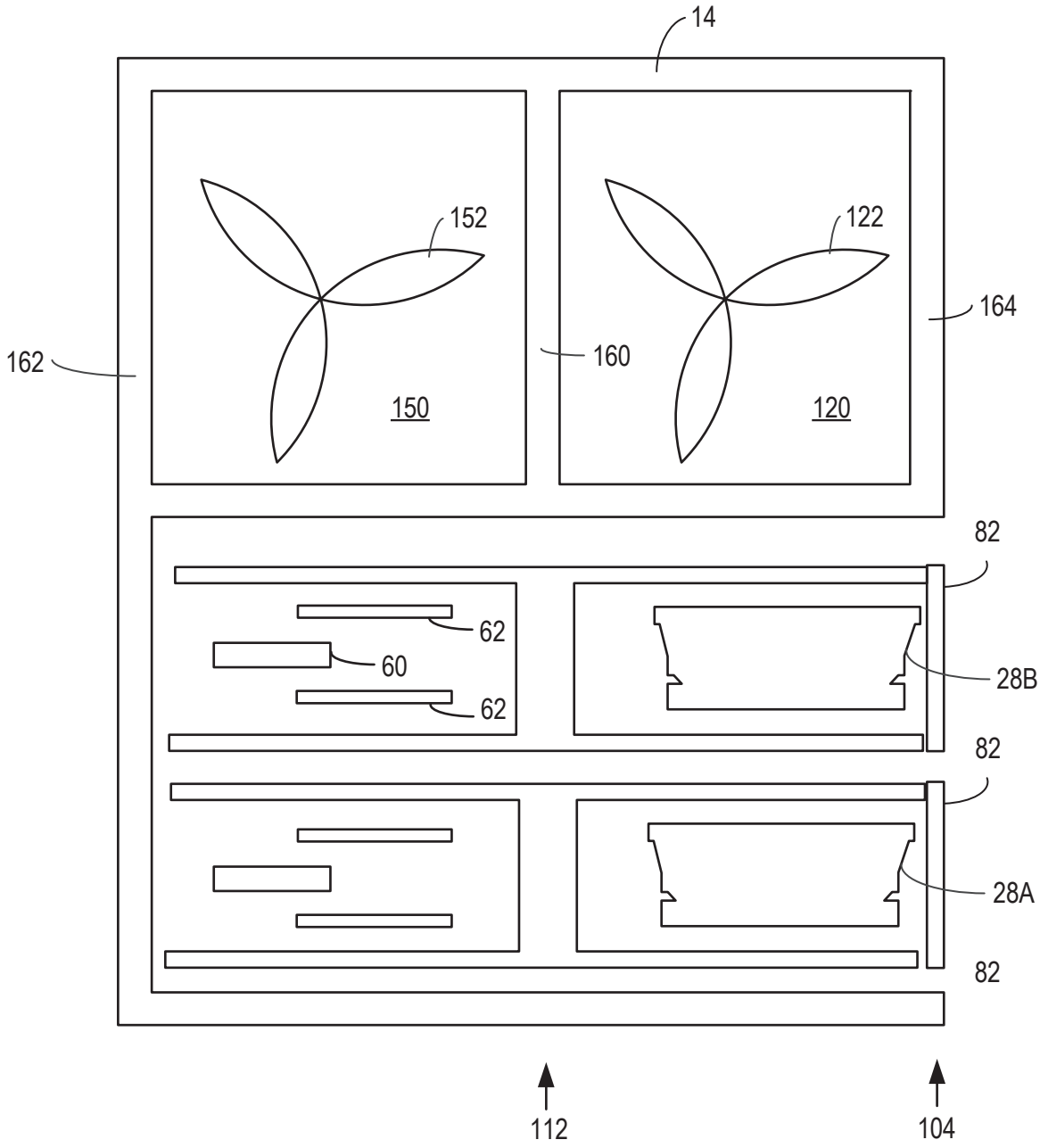

FIG 4

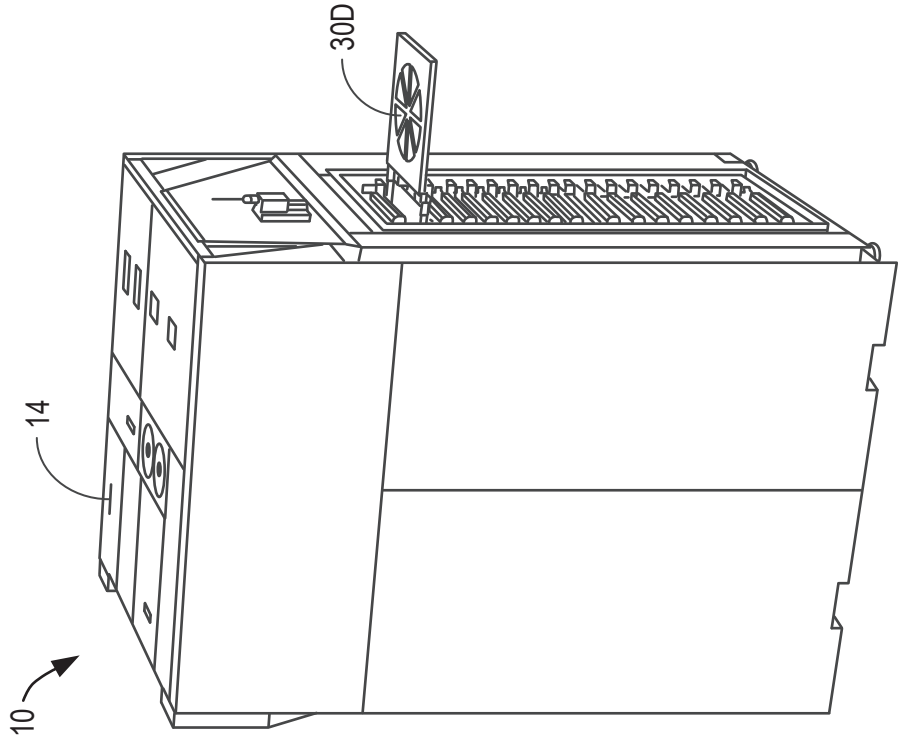

FIG. 5B

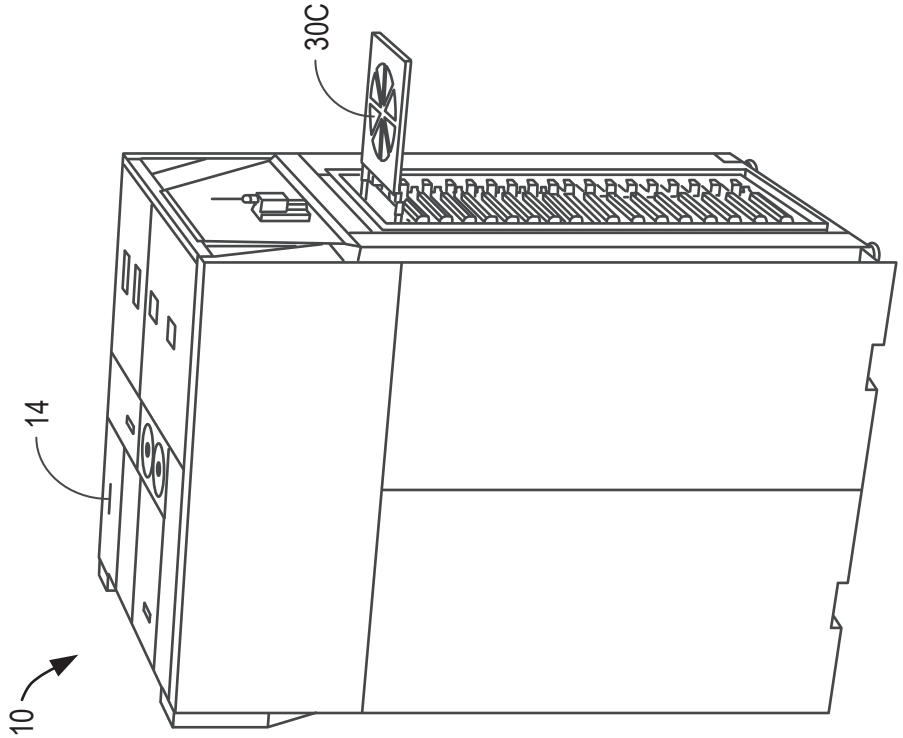

FIG. 5A

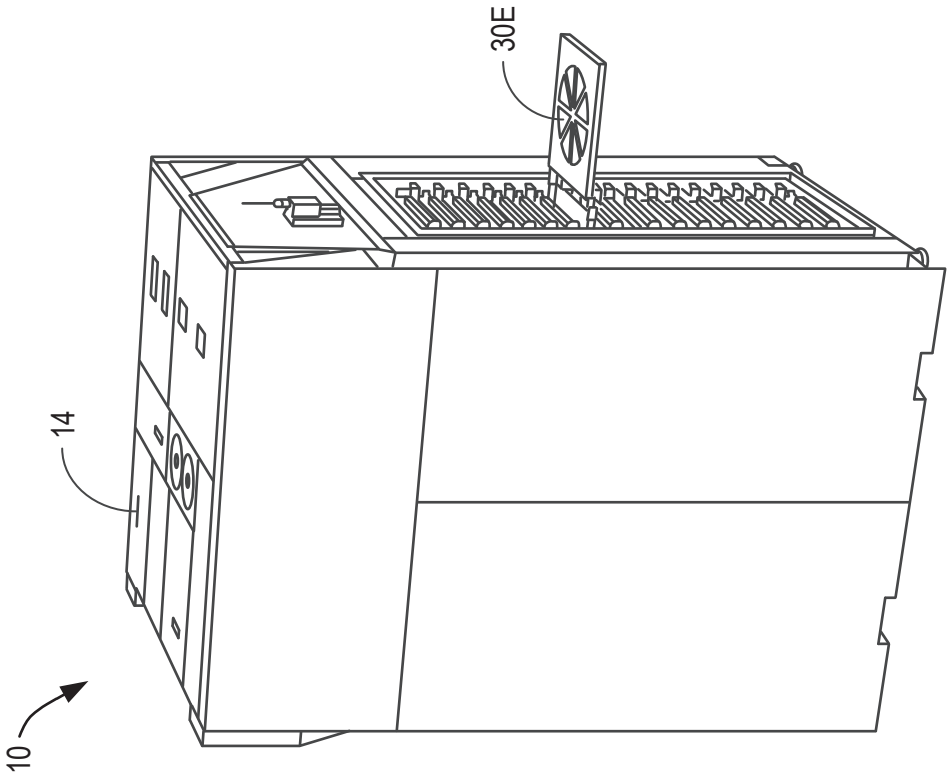

FIG. 5C

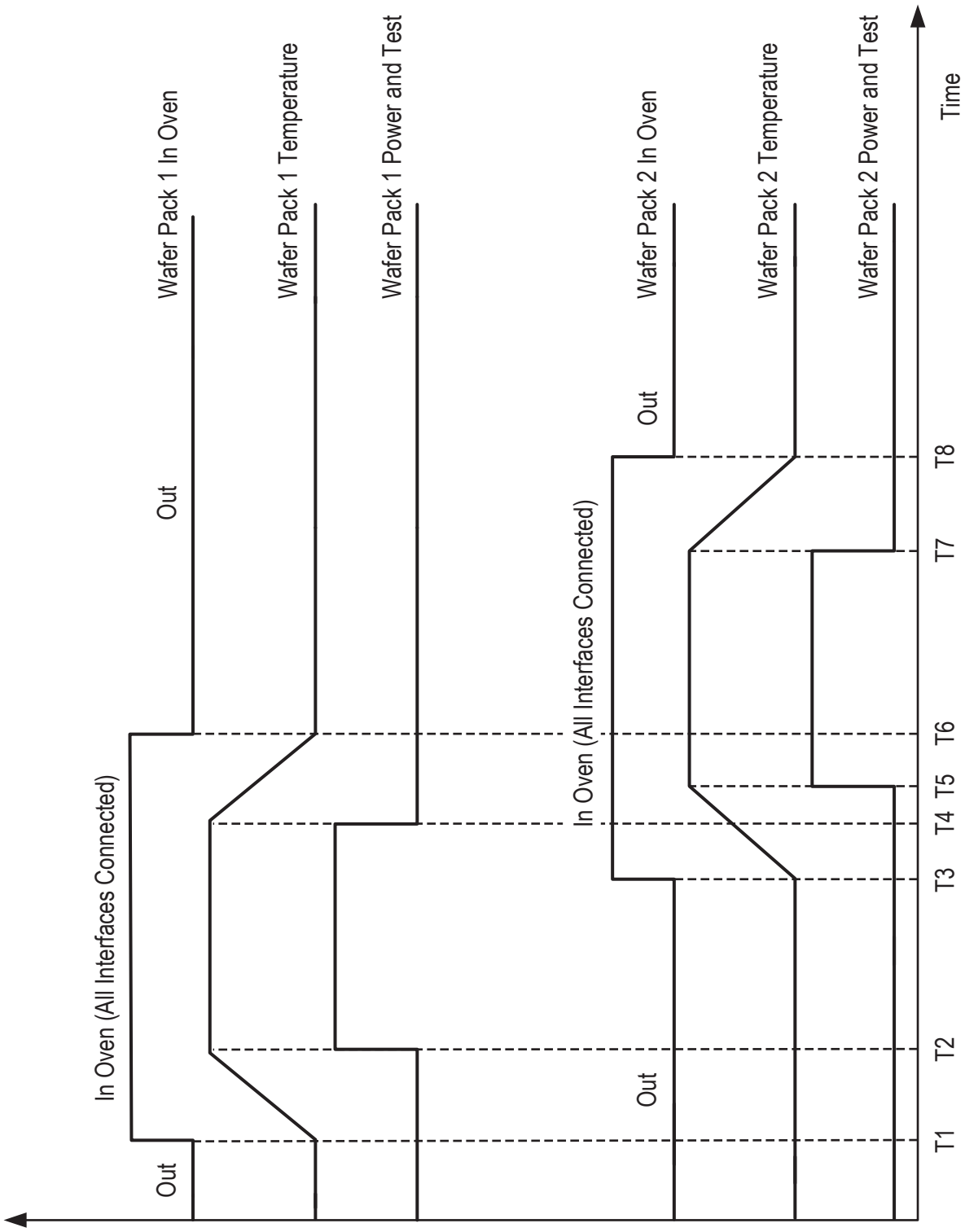
In Oven (All Interfaces Connected)
Out
Wafer Pack 1 In Oven
Wafer Pack 1 Temperature
Wafer Pack 1 Power and Test
In Oven (All Interfaces Connected)
Out
Wafer Pack 2 In Oven
Wafer Pack 2 Temperature
Wafer Pack 2 Power and Test
Time
T1
T2
T3
T4
T5
T6
T7
T8

FIG 6

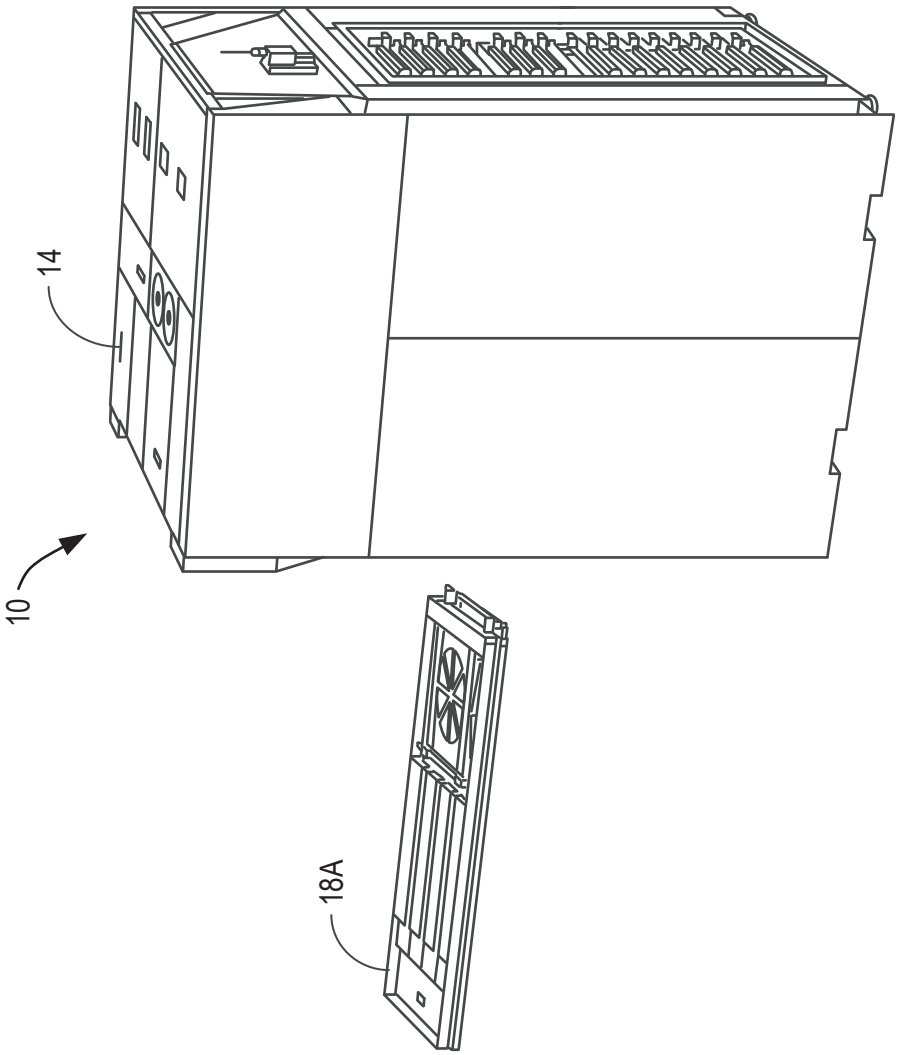

FIG. 7

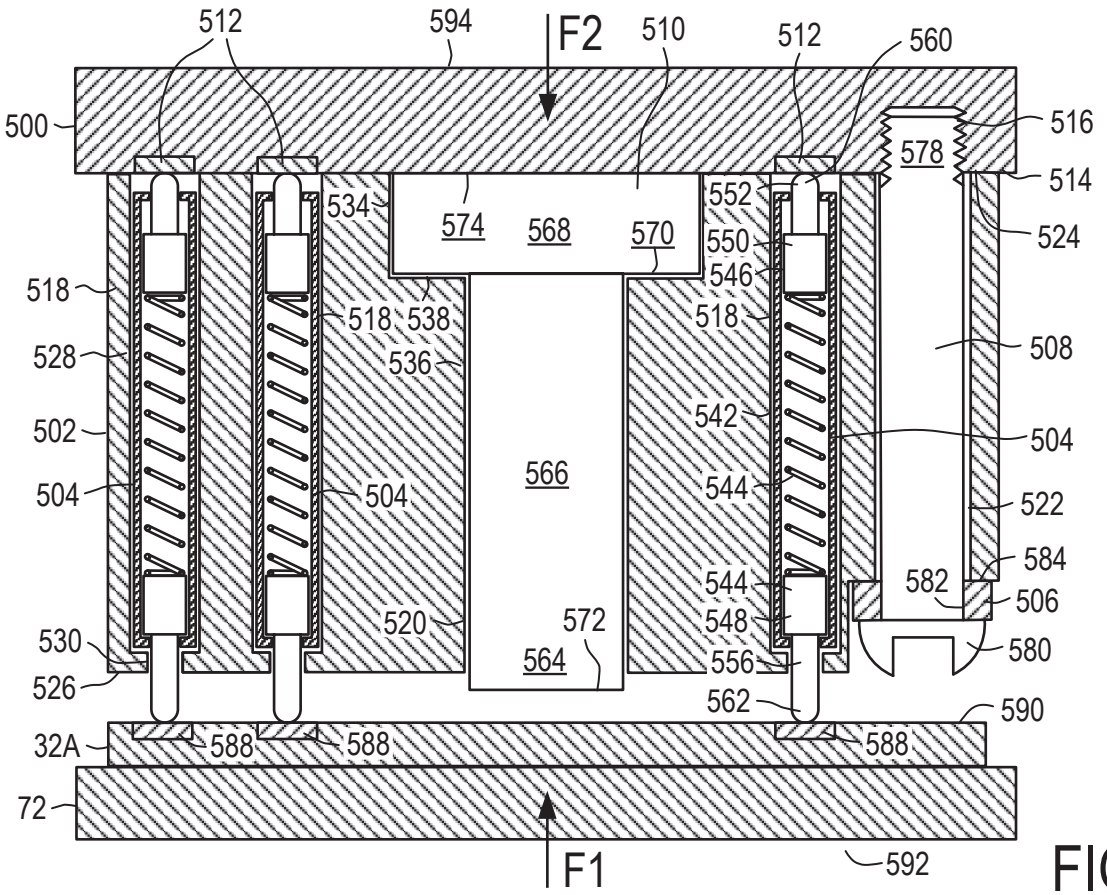
512
594
F2
510
512
560
500
516
578
514
534
574
568
570
552
550
524
546
518
518
538
518
508
528
536
542
502
504
566
504
504
544
522
584
544
582
506
520
572
548
530
564
556
580
526
562
590
32A
588
588
588
72
F1
592

FIG. 8A

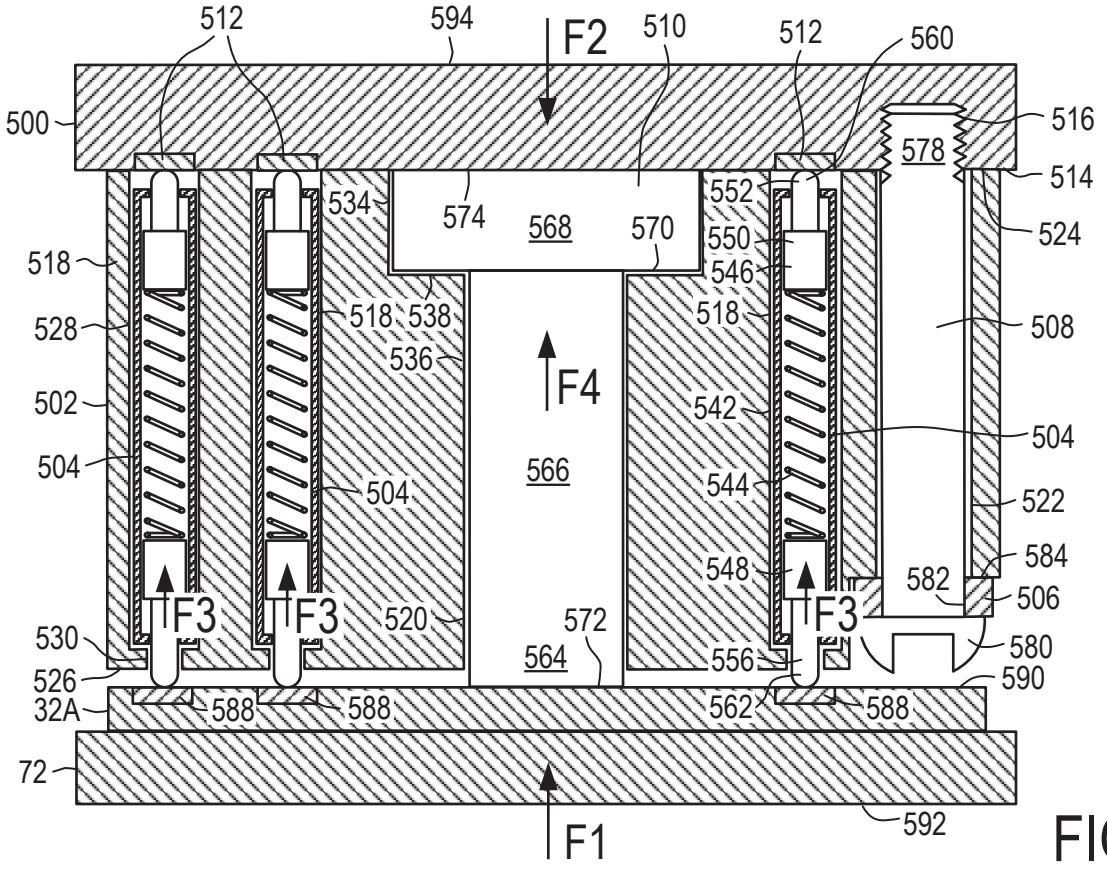
512
594
F2
510
512
560
500
516
578
514
534
574
568
570
552
550
524
546
518
518
538
518
508
528
536
F4
502
542
504
504
566
504
544
522
584
548
582
506
F3
F3
F3
520
572
530
564
556
580
526
590
32A
588
588
562
588
72
F1
592

FIG. 8B

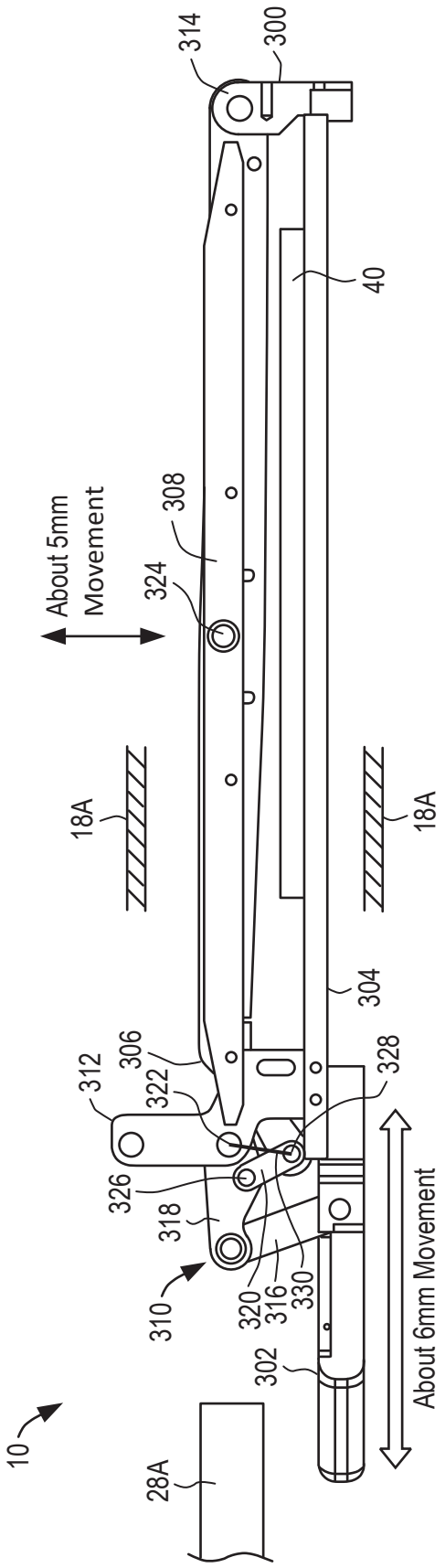
10
28A
302
310
318
320
316
330
326
322
312
306
328
304
18A
18A
About 5mm Movement
324
308
40
314
300
About 6mm Movement

FIG. 9A

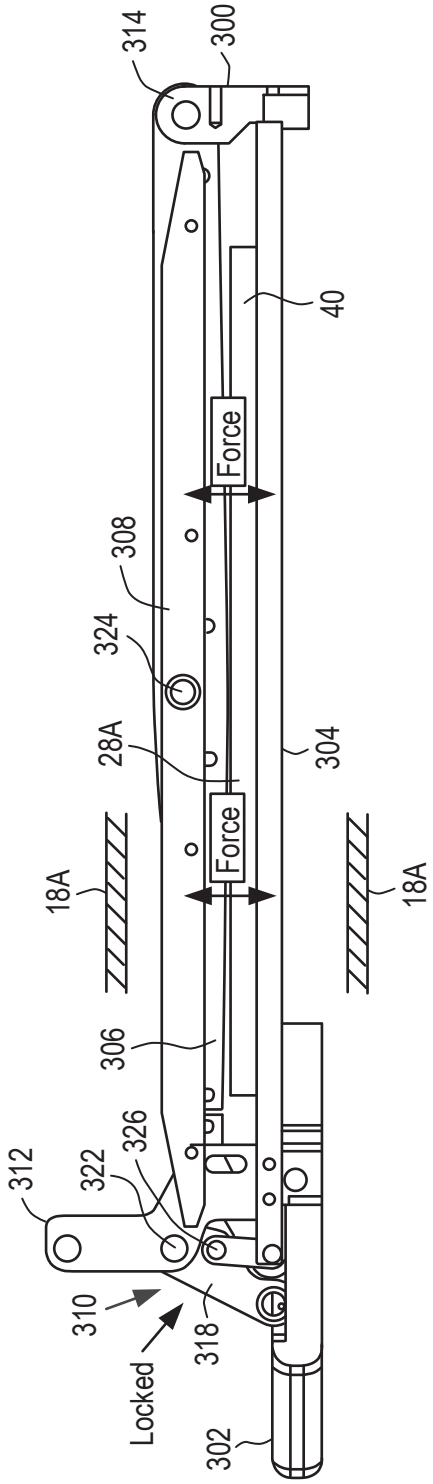
302
Locked
310
318
312
322
326
306
18A
18A
28A
Force
Force
324
308
304
40
314
300

FIG. 9B

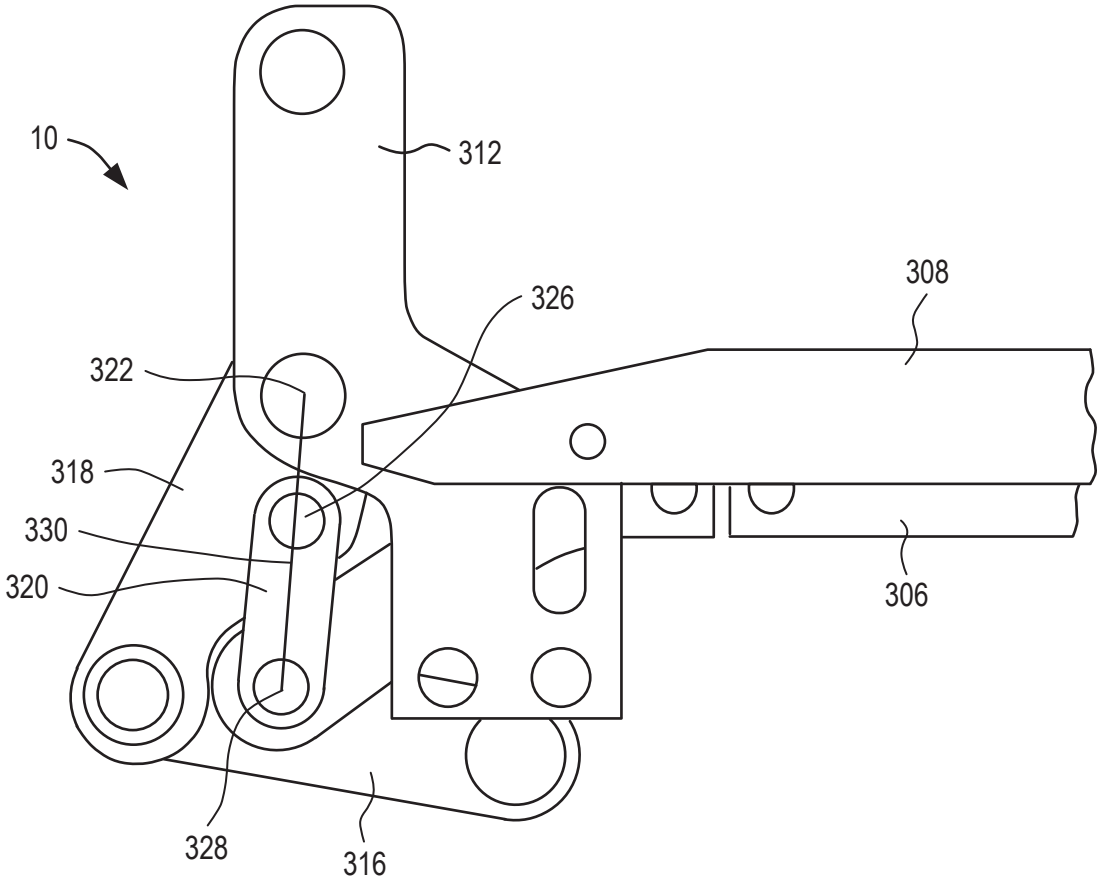

FIG. 10

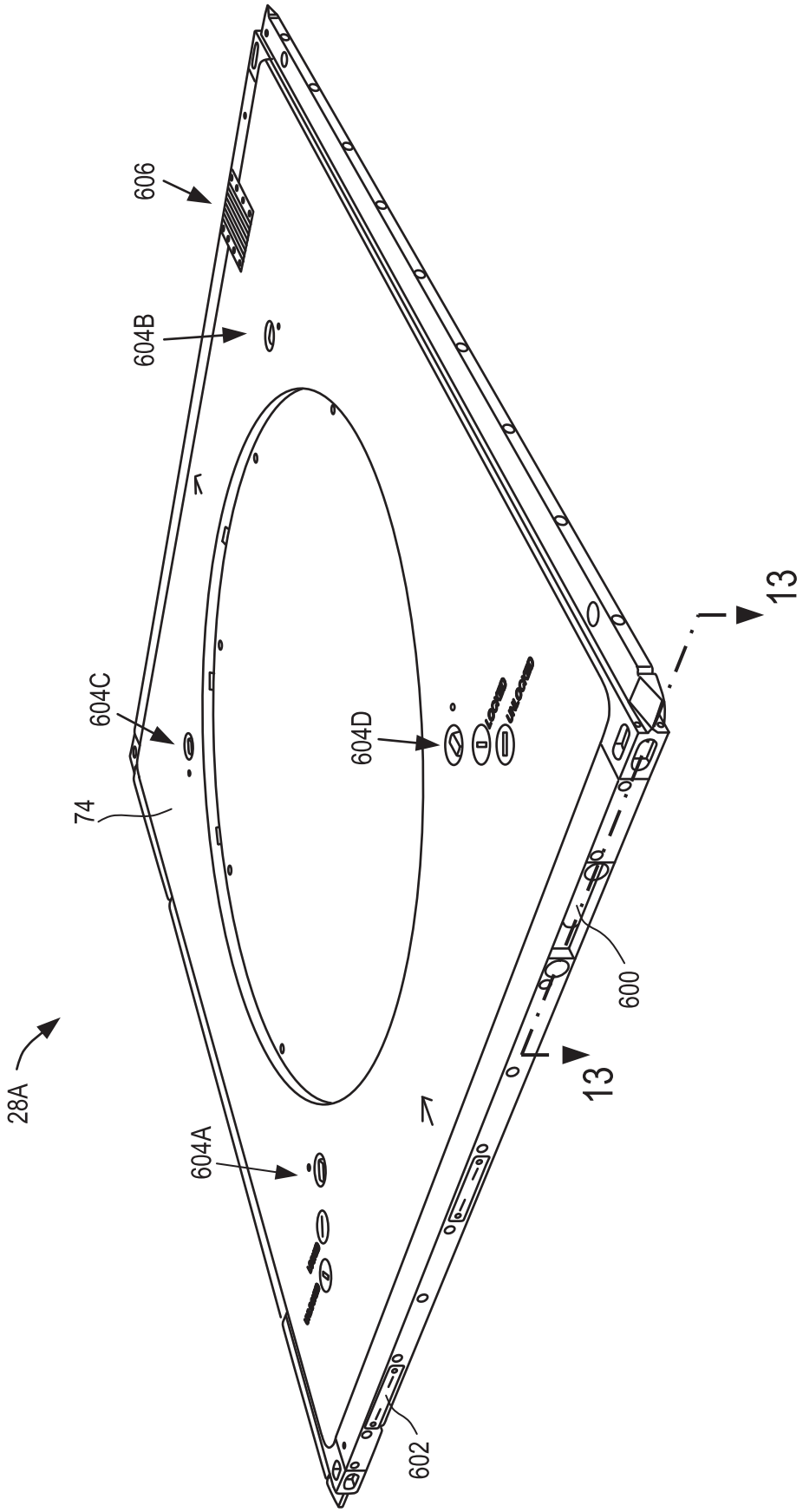

FIG. 11

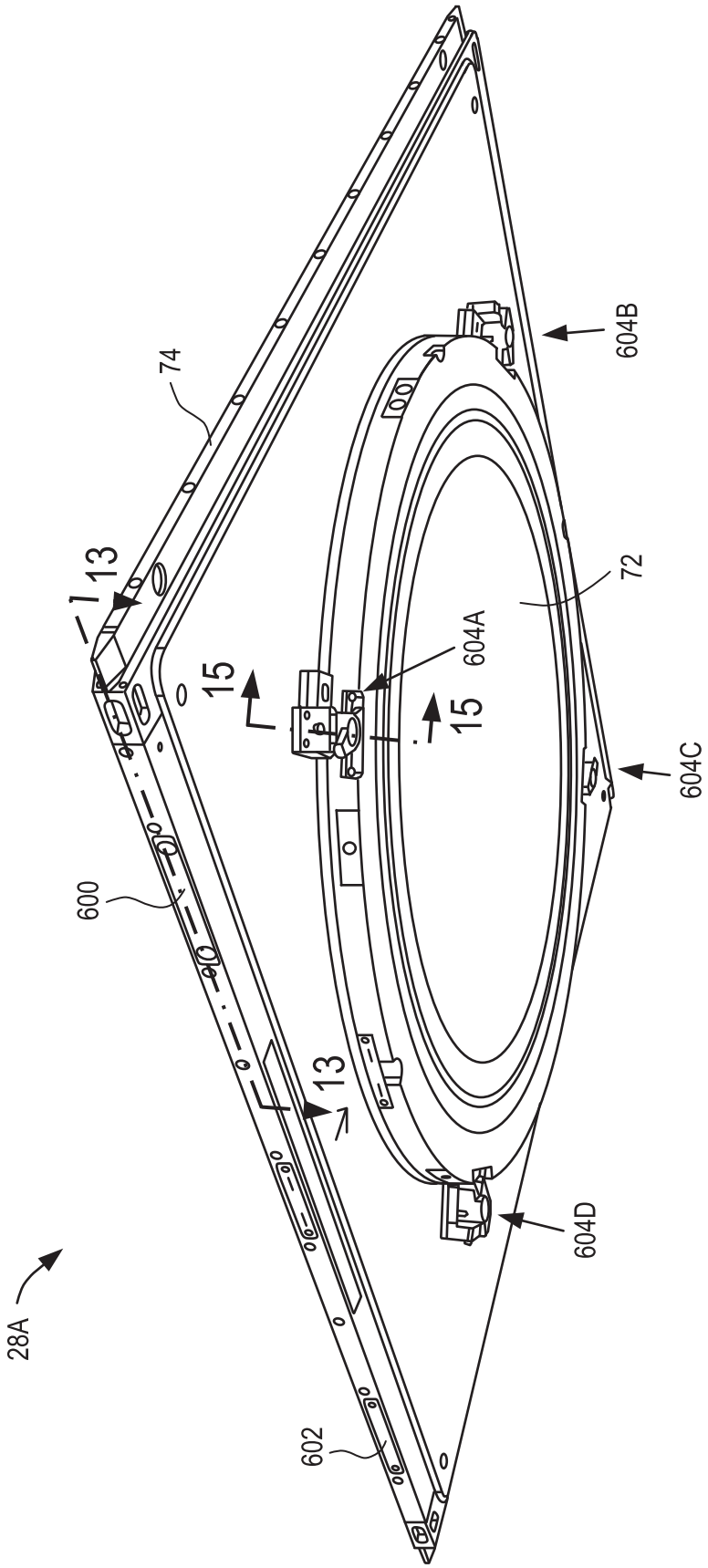

FIG. 12

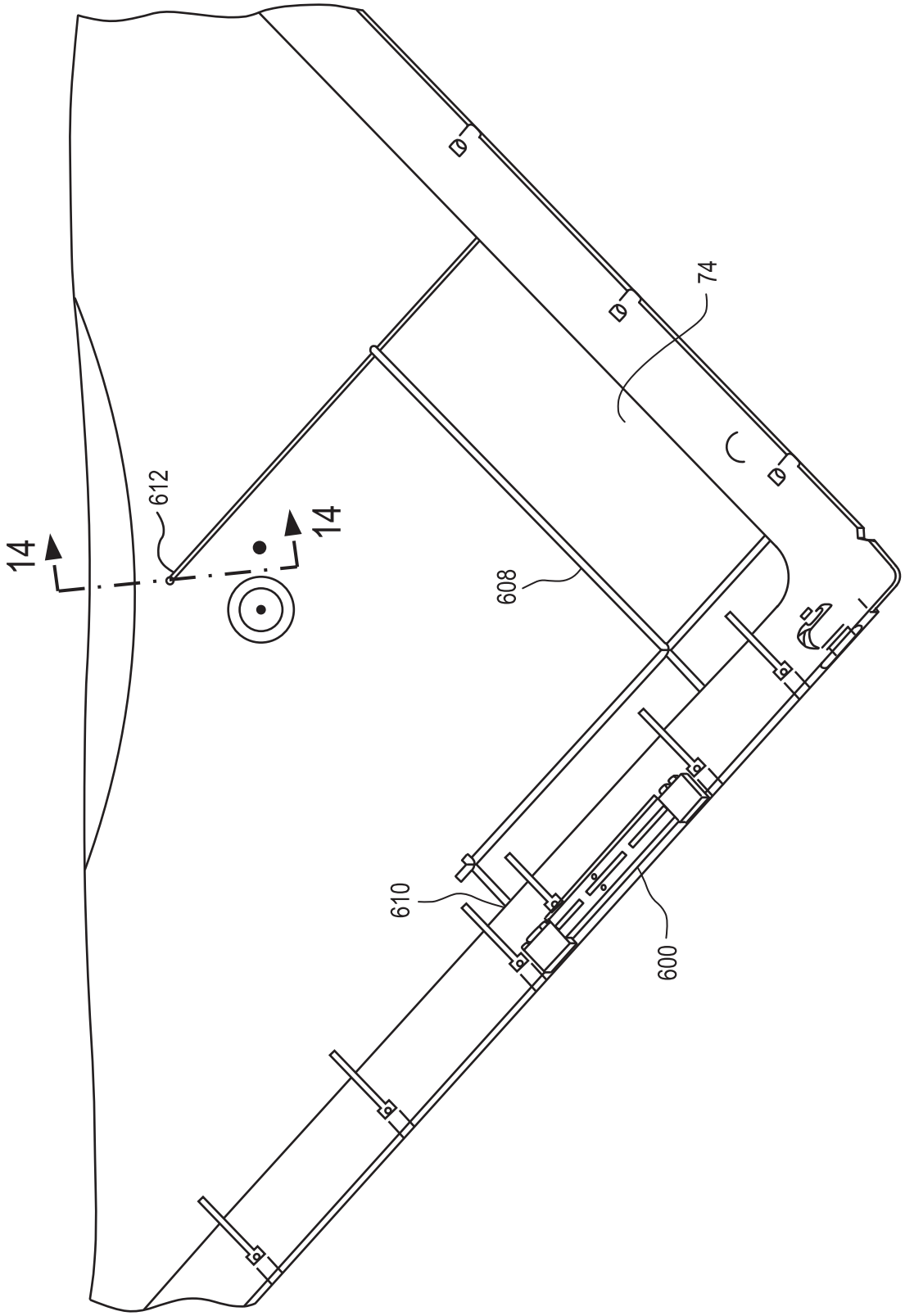

FIG. 13

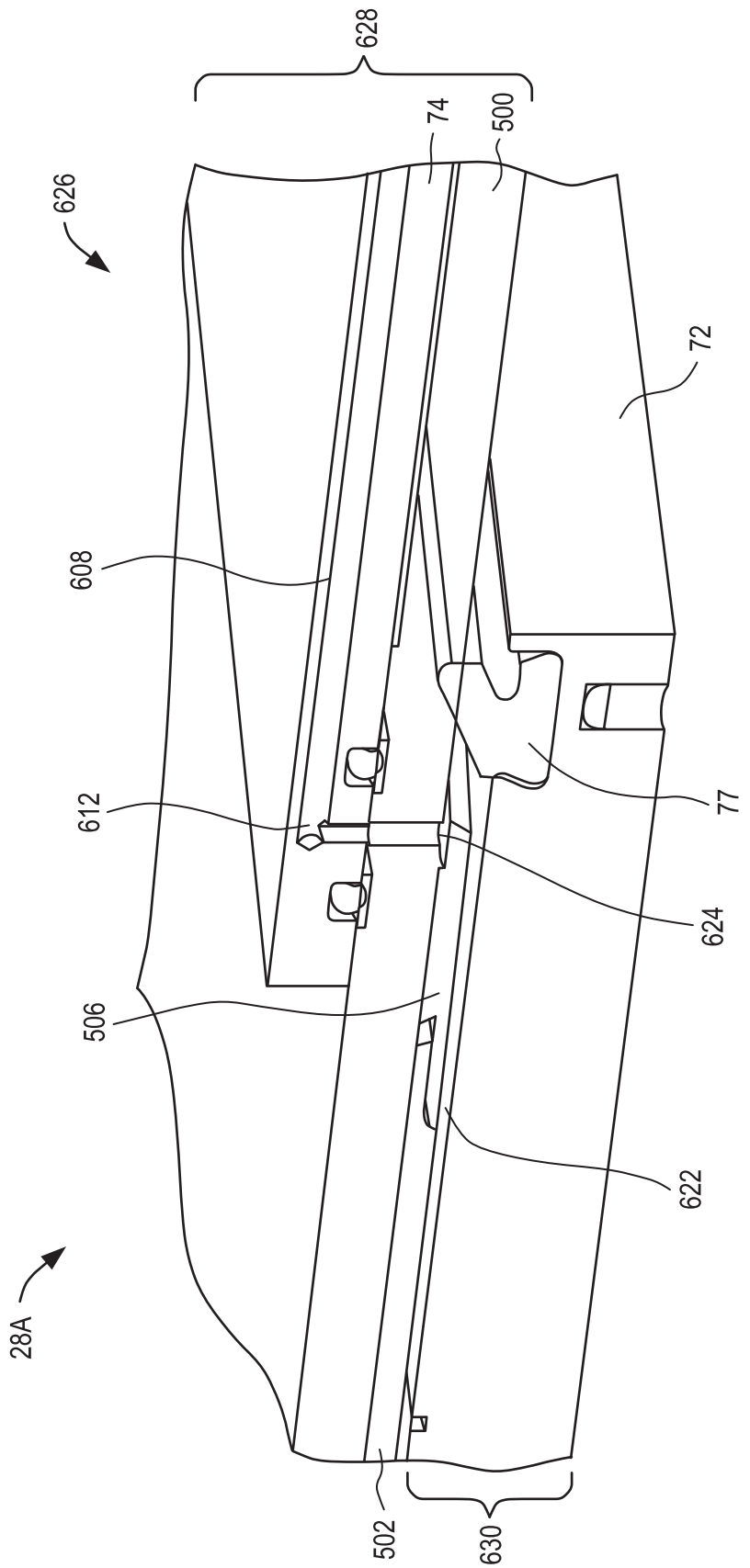

FIG. 14

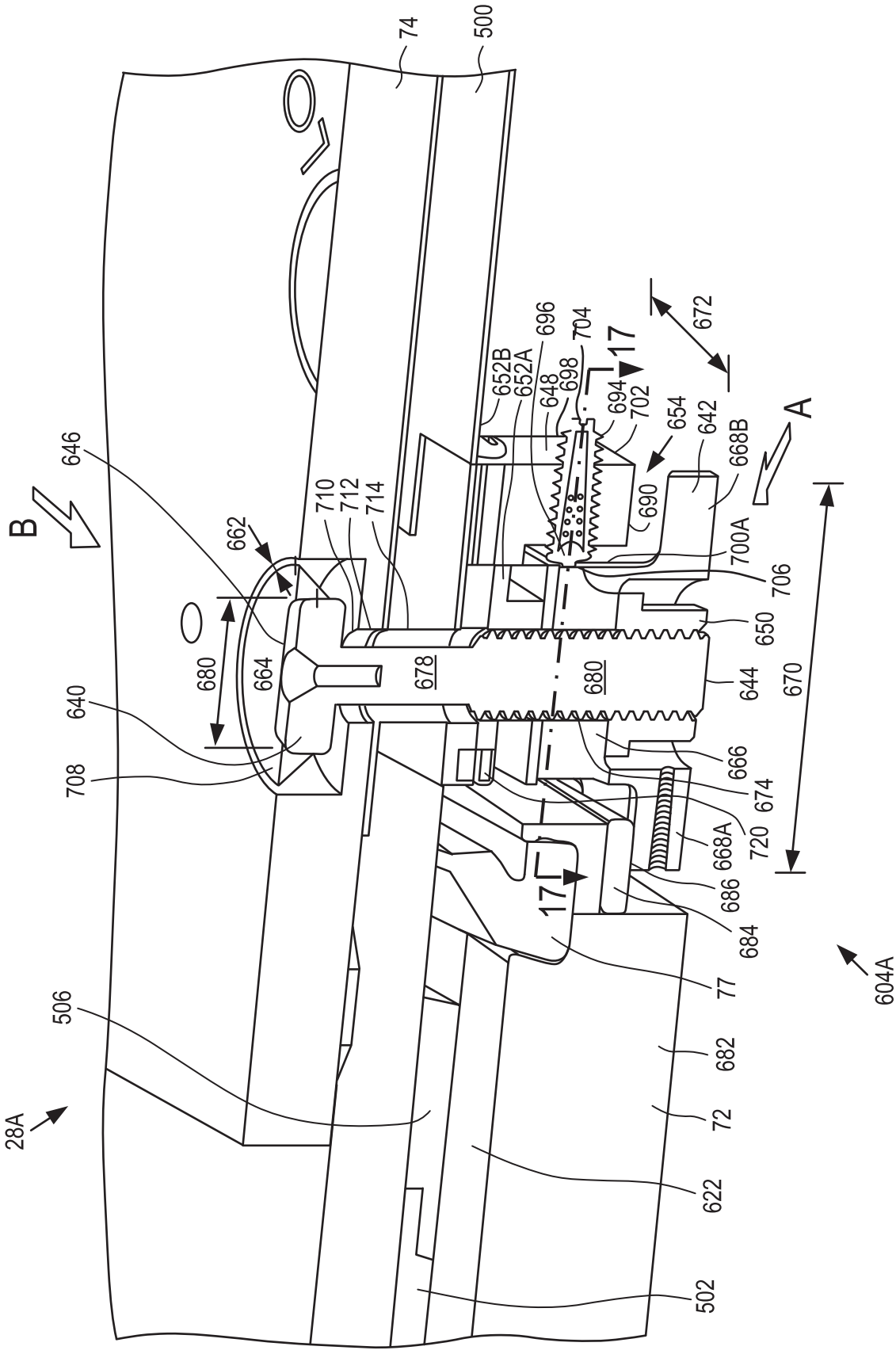
74
500
672
696
704
652B
652A
648
698
17
694
702
654
642
668B
A
646
B
710
712
714
662
690
700A
706
650
680
664
678
680
644
670
640
708
666
674
668A
720
686
684
17
77
604A
506
682
72
622
502
28A

FIG. 15

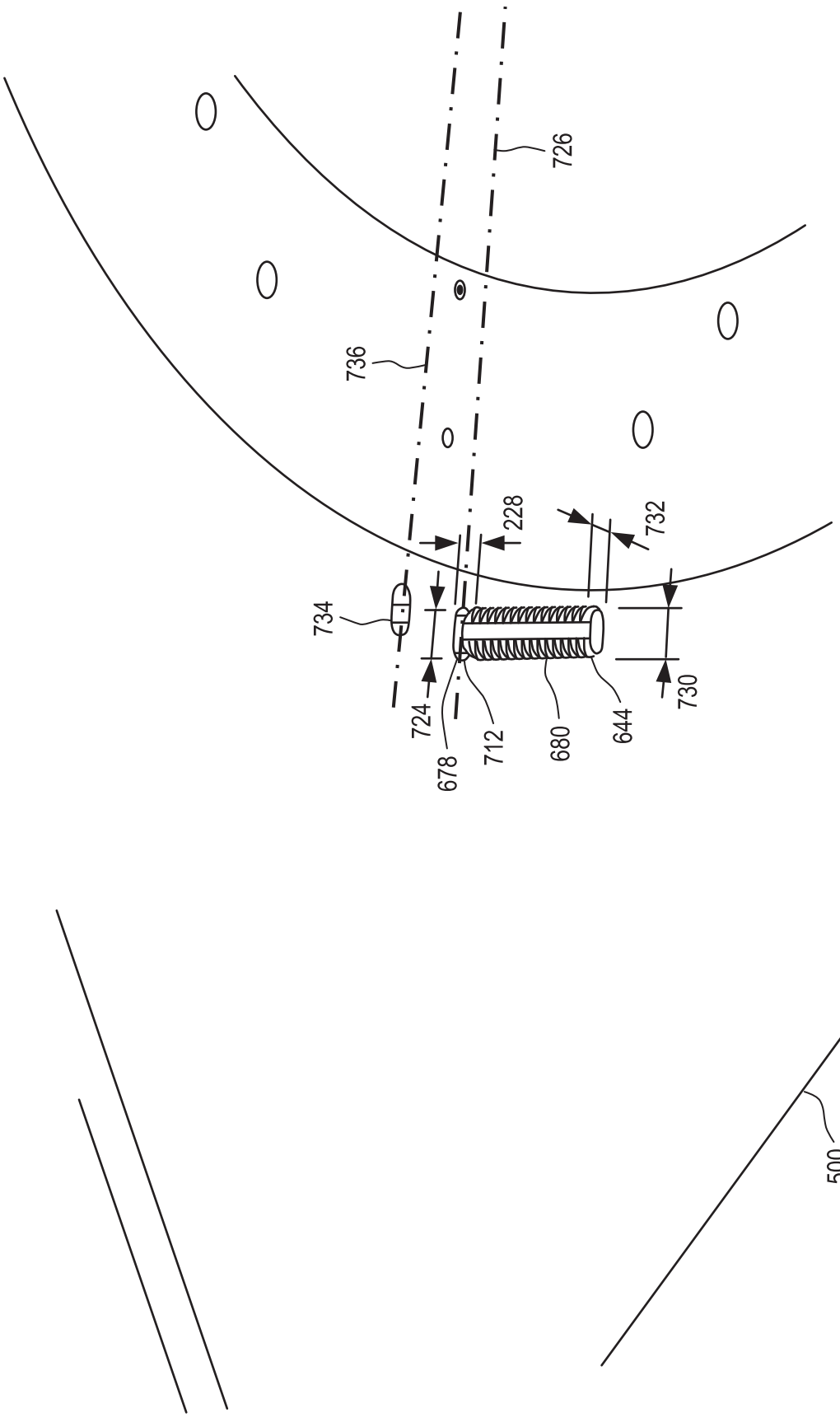

FIG. 16

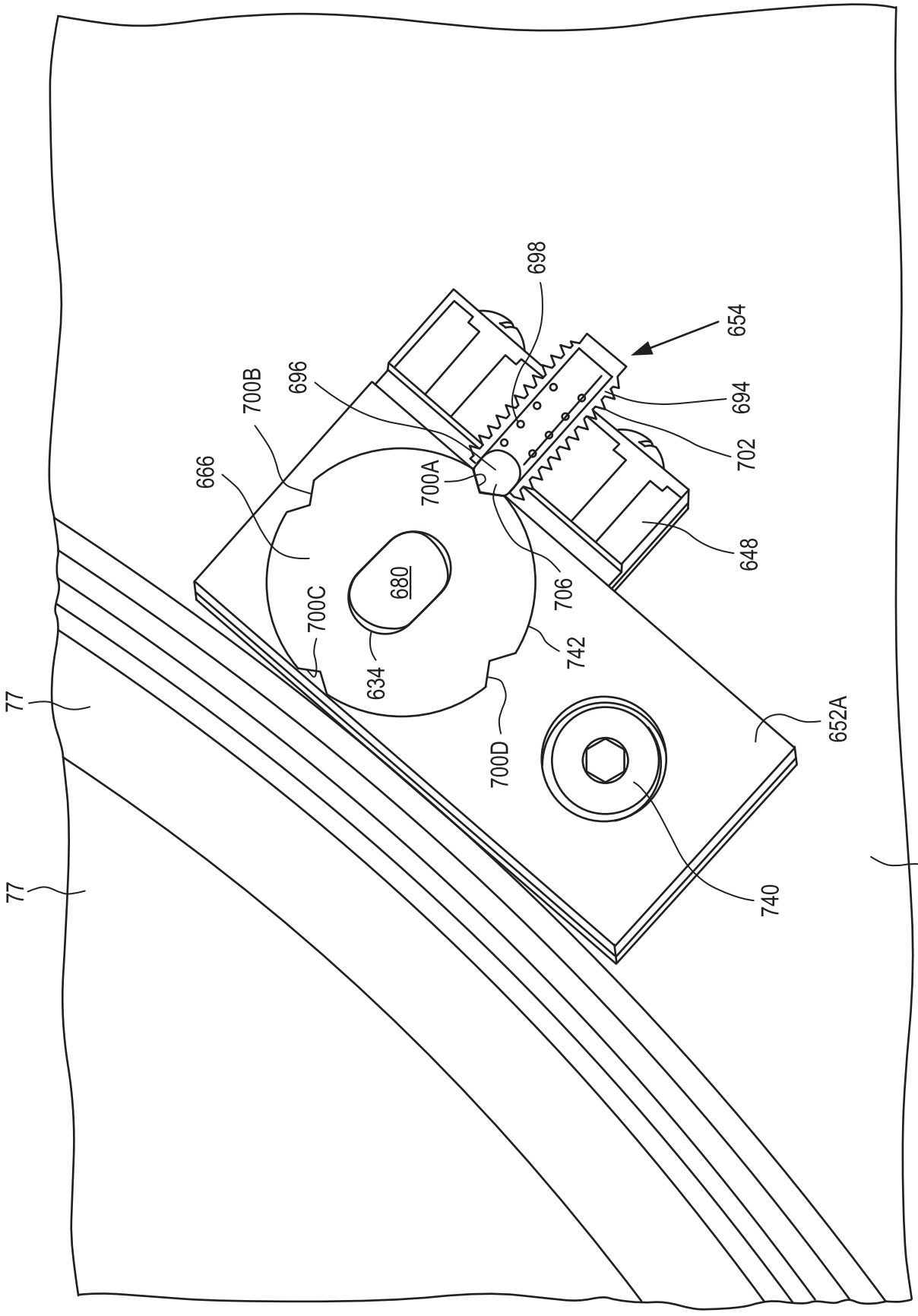
698
654
696
700B
694
702
666
700A
648
680
706
700C
742
634
77
652A
700D
77
740
500

FIG. 17

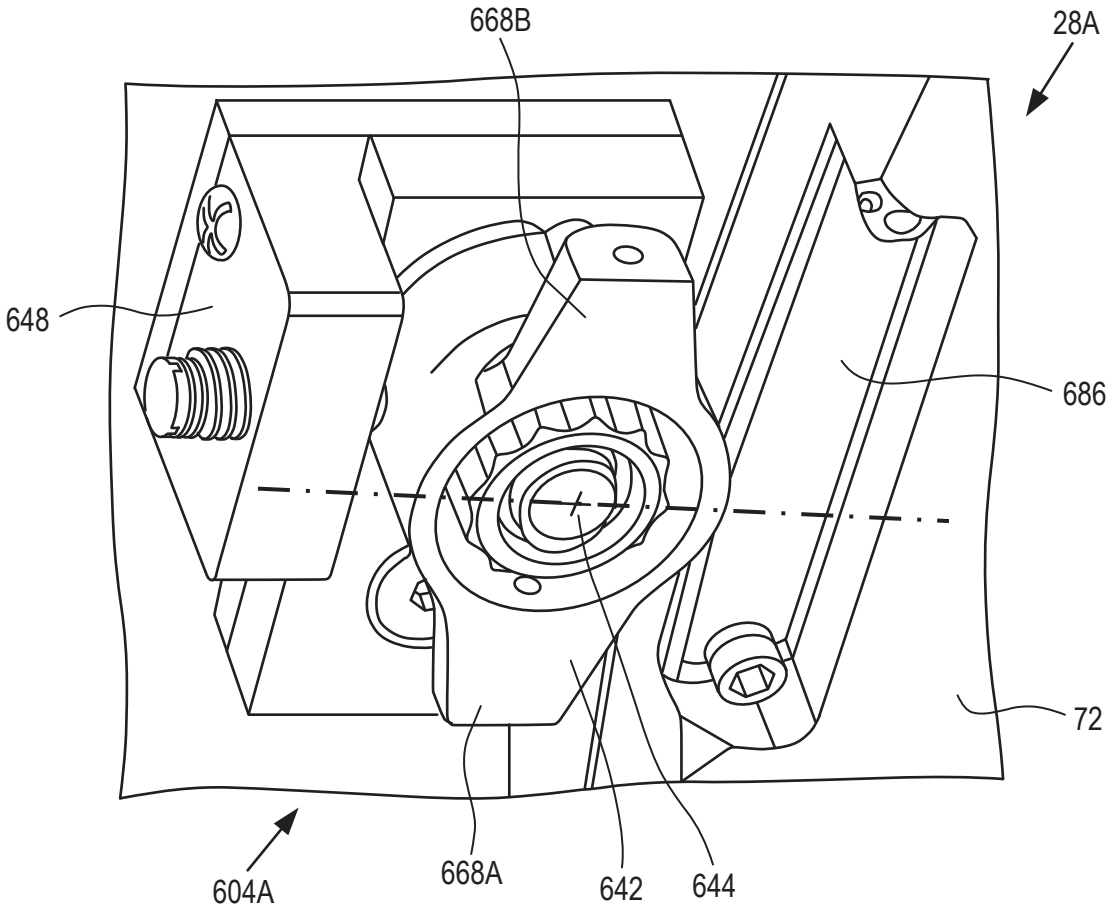

FIG. 18a(i)

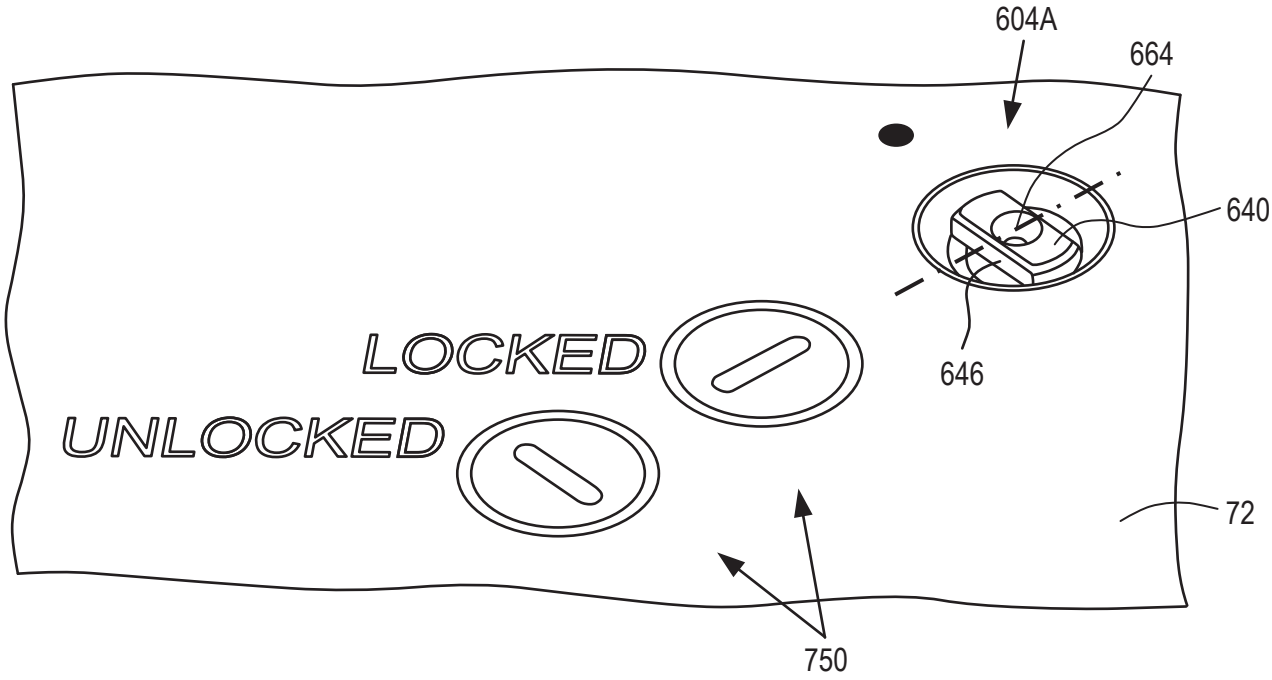

FIG. 18a(ii)

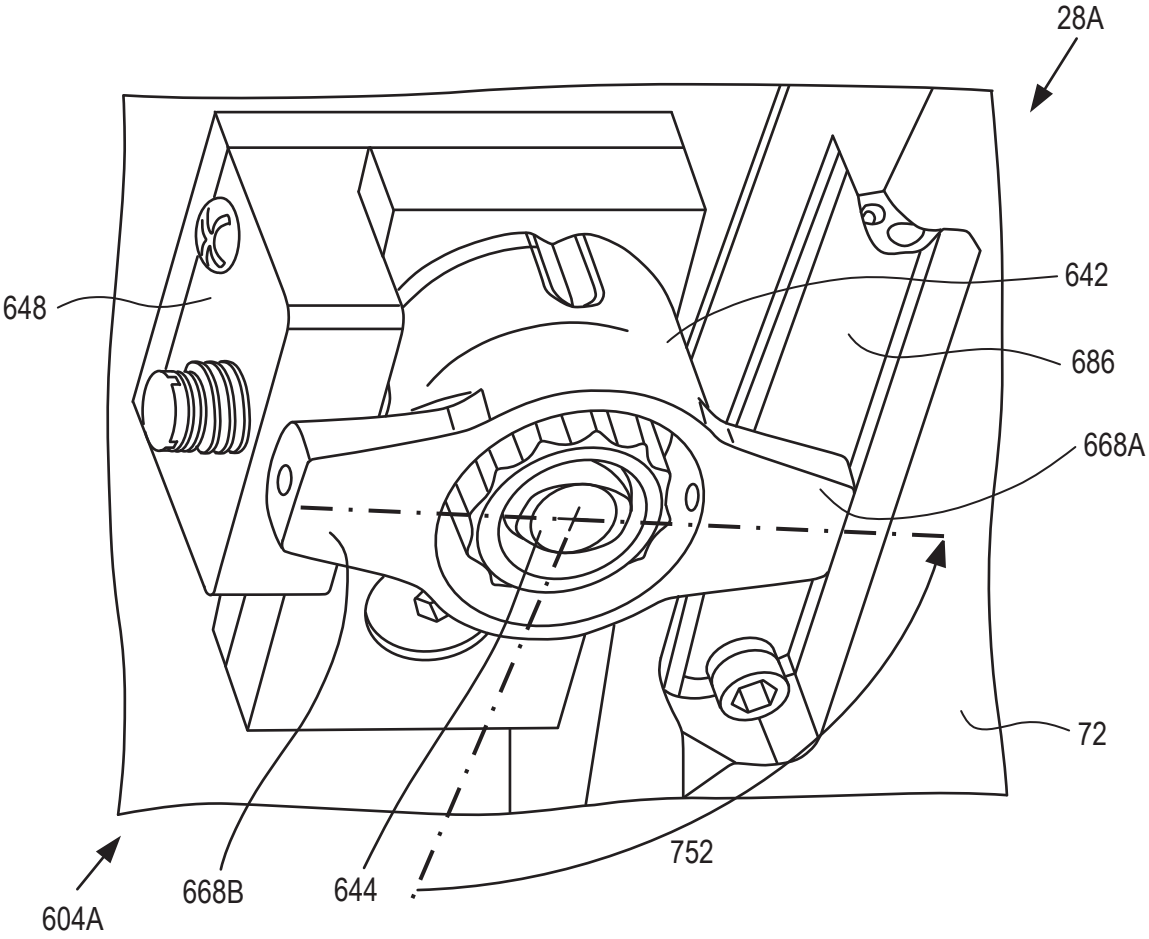

FIG. 18b(i)

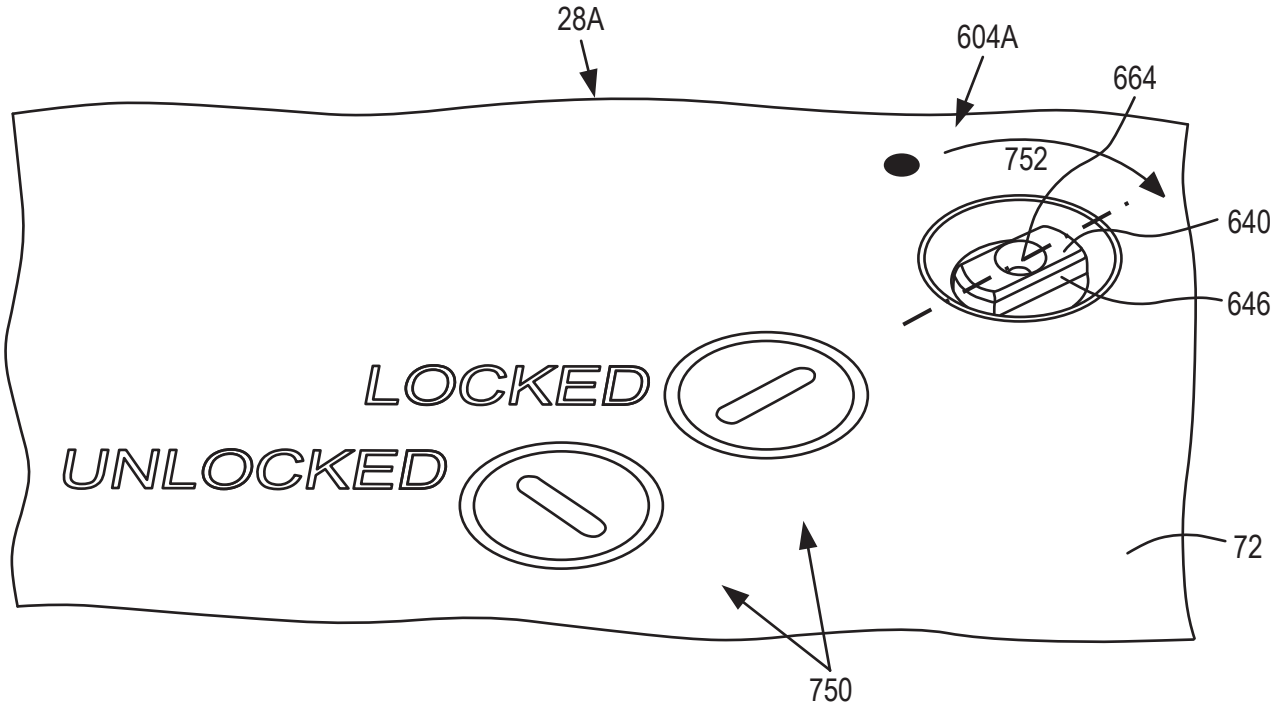

FIG. 18b(ii)

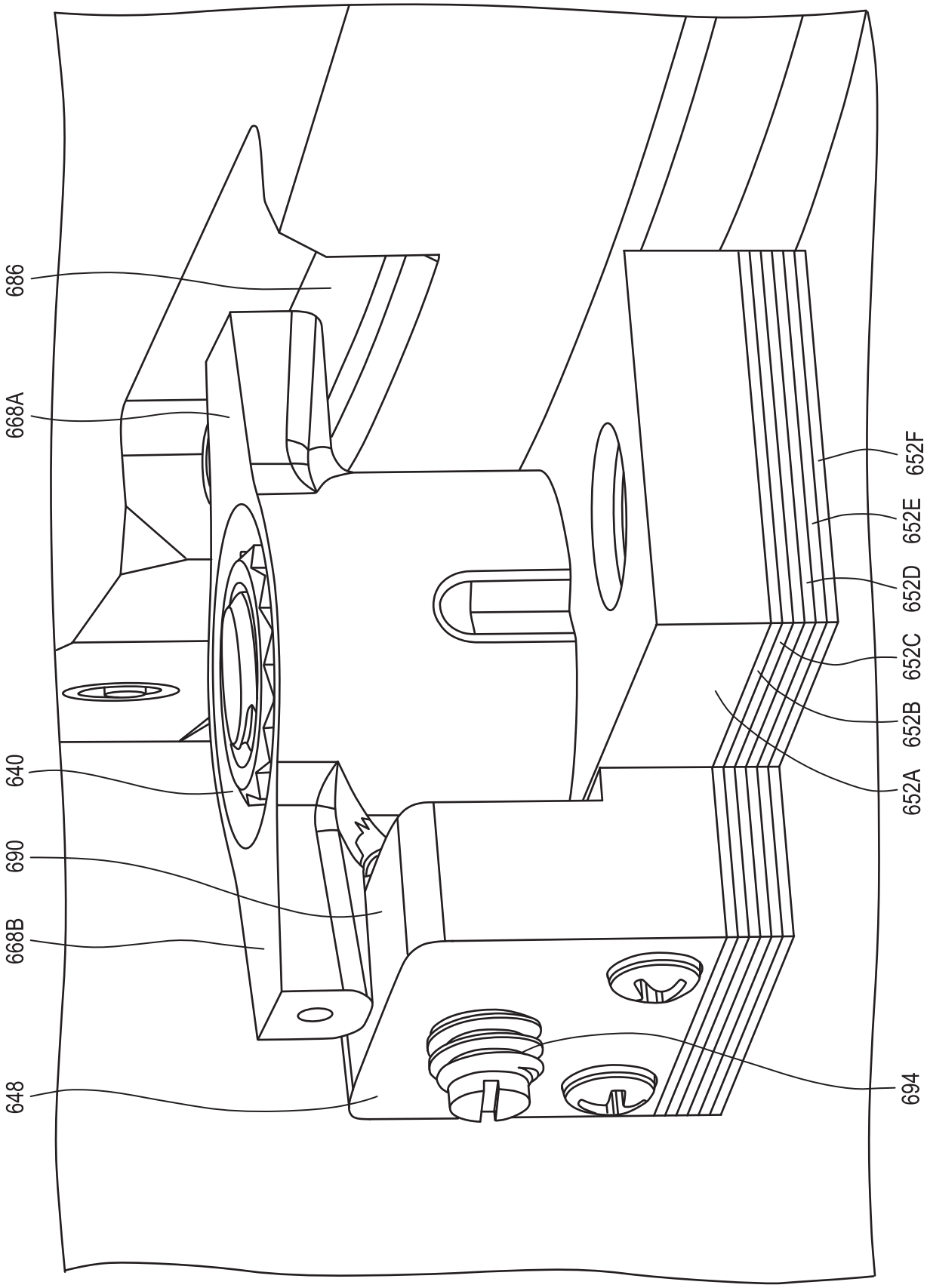

FIG. 19

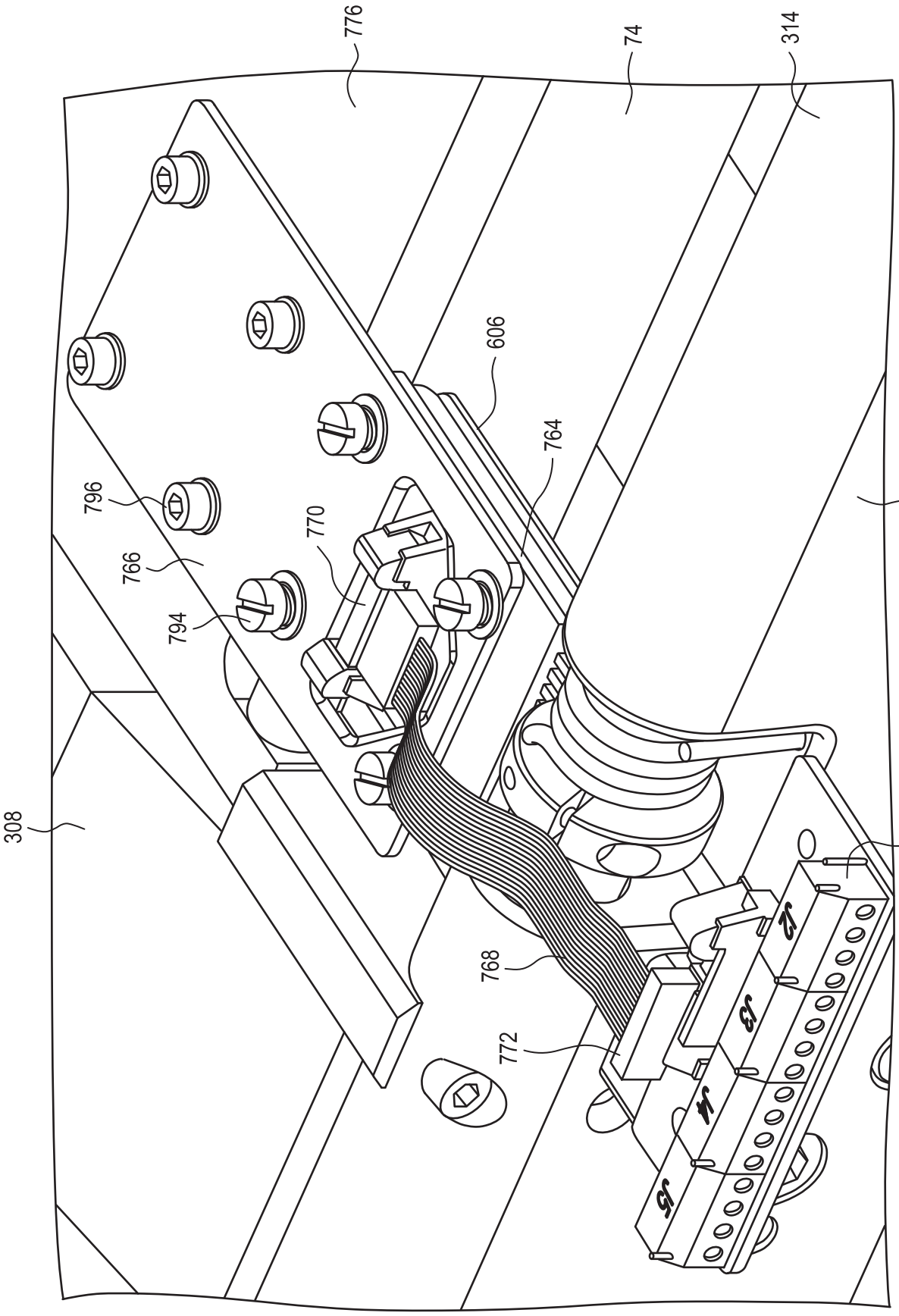

FIG. 20

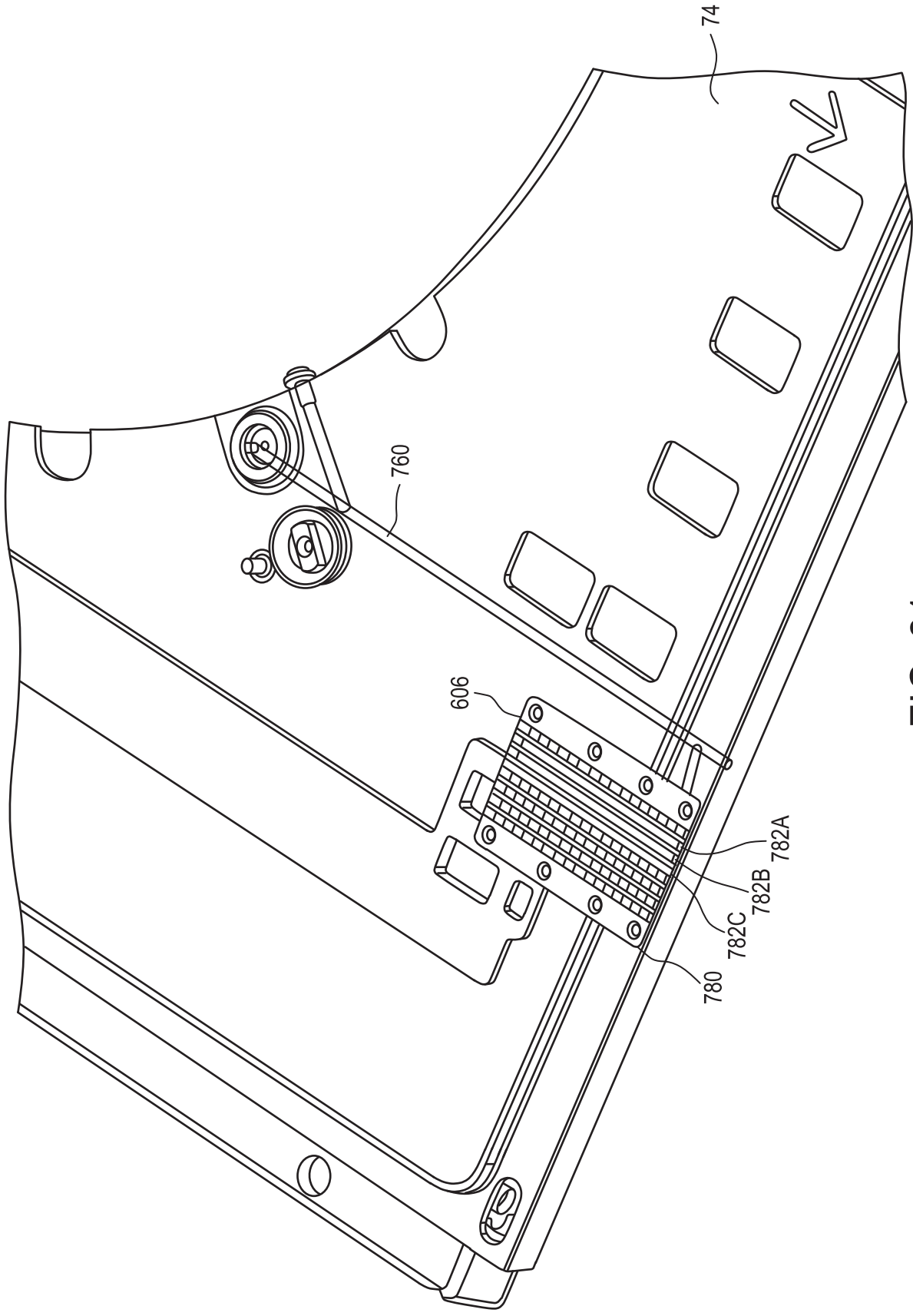

FIG. 21

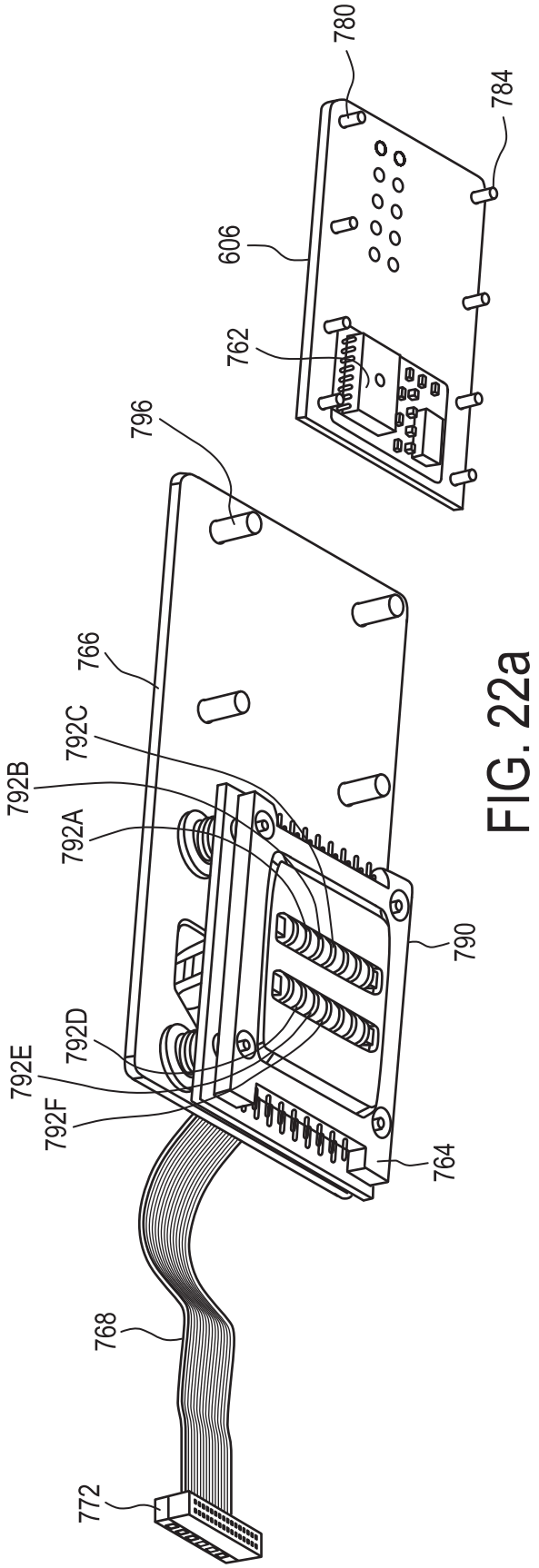

FIG. 22a

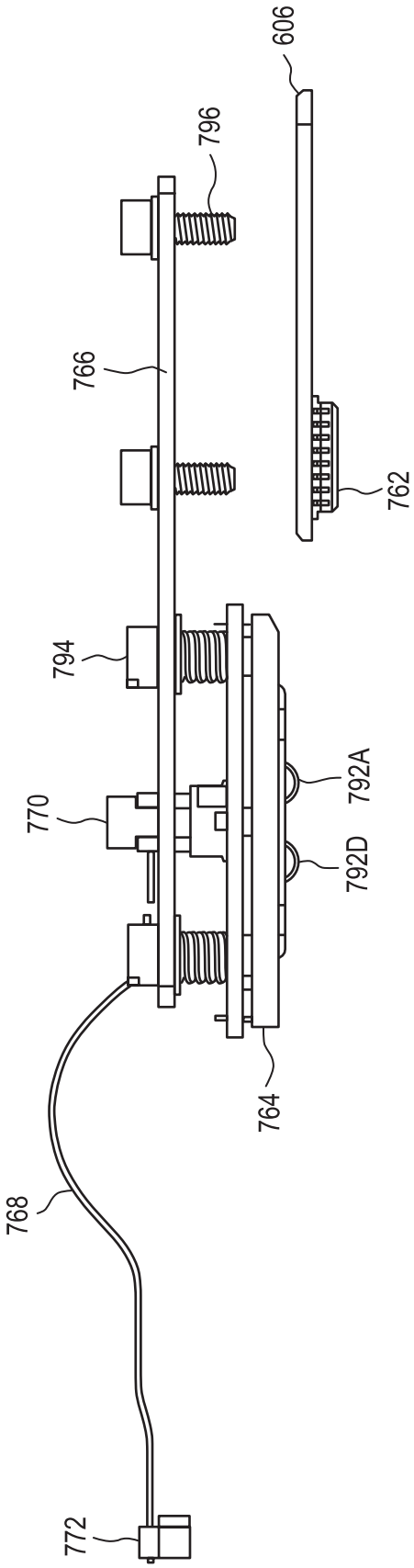

FIG. 22b

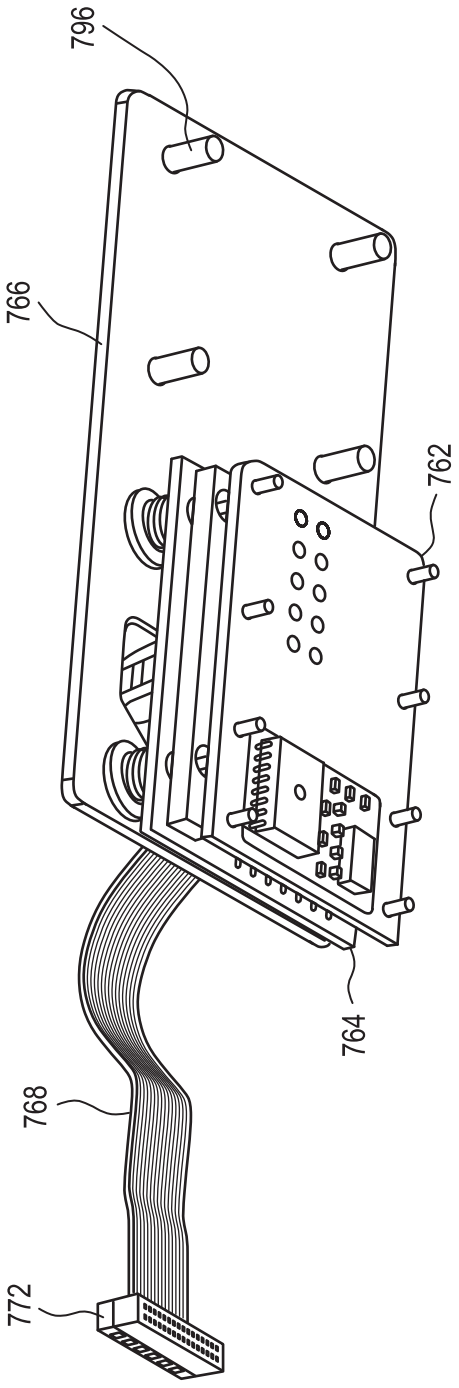

FIG. 23a

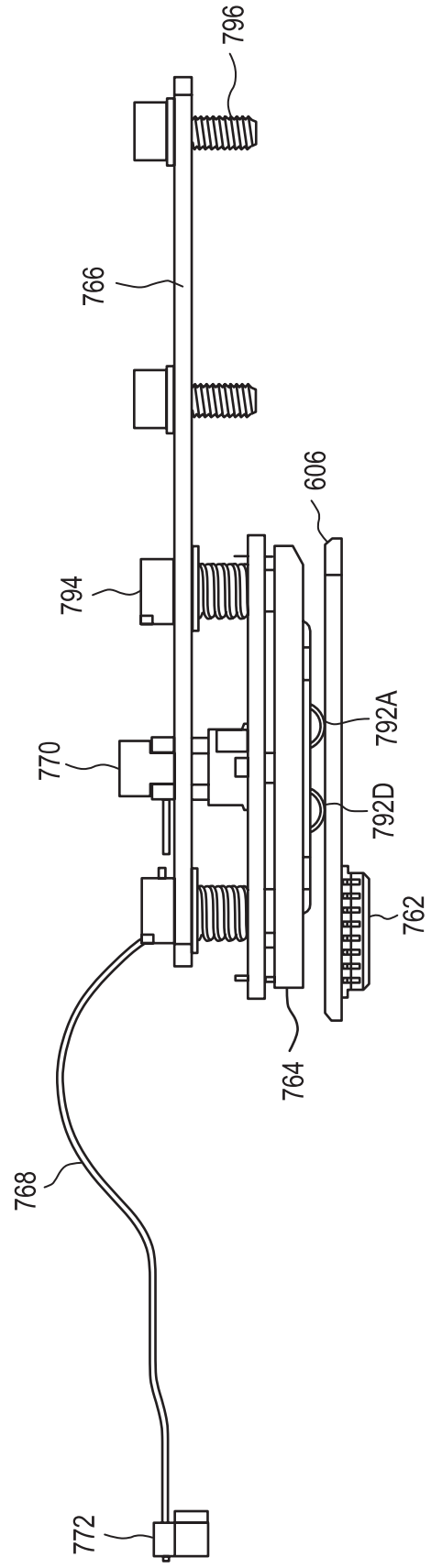

FIG. 23b