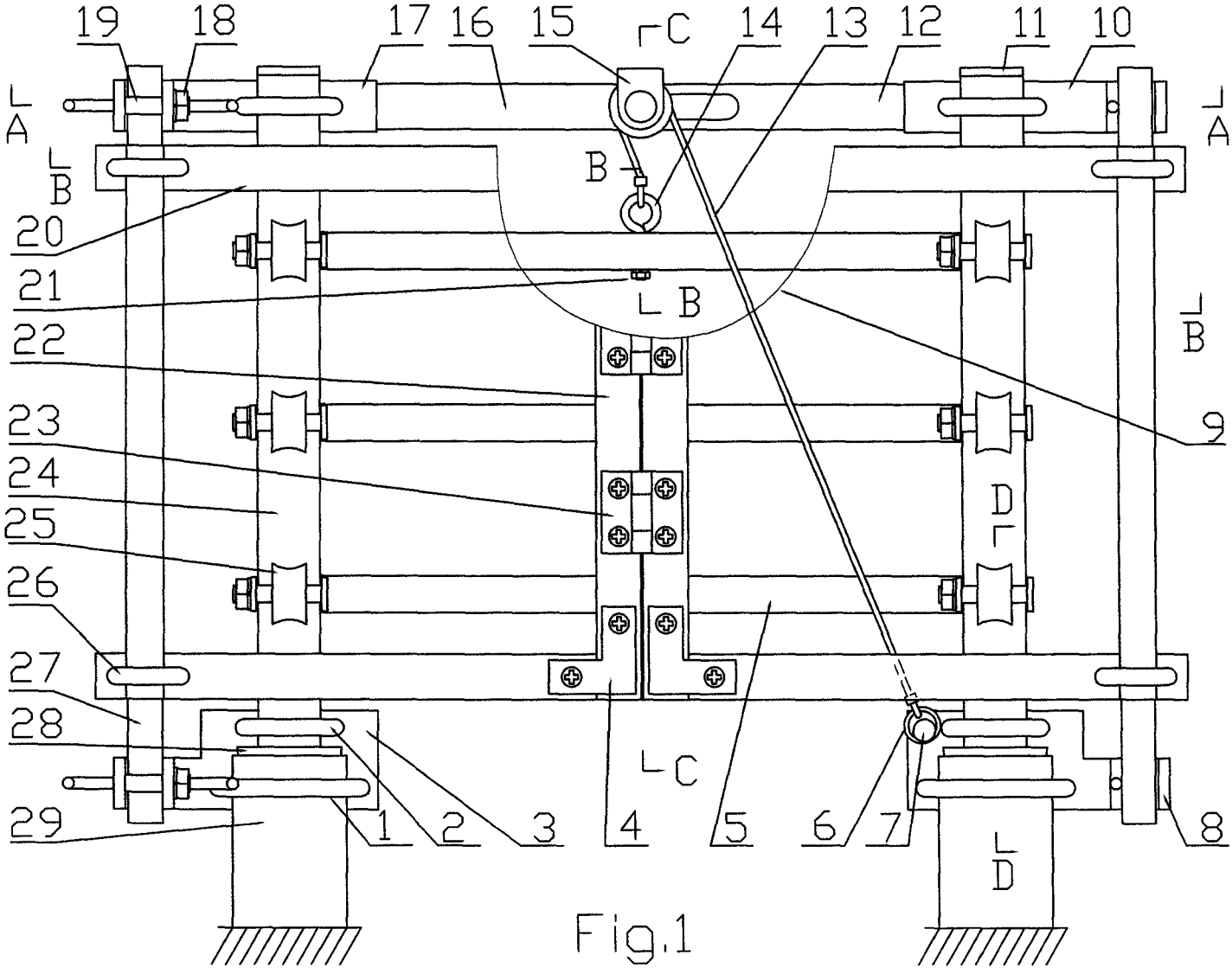
19
18
17
16
15
C
14
13
12
11
10
A
A
B
B
20
21
B
22
23
24
25
26
27
28
29
9
D
C
1
2
3
4
5
6
7
8
D

Fig.1

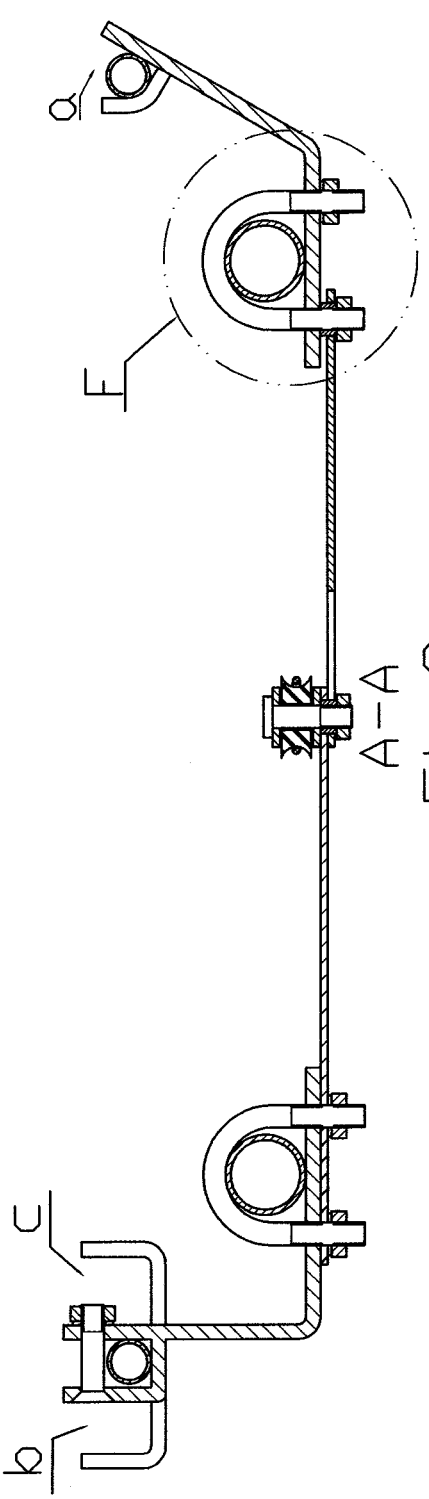

Fig.3

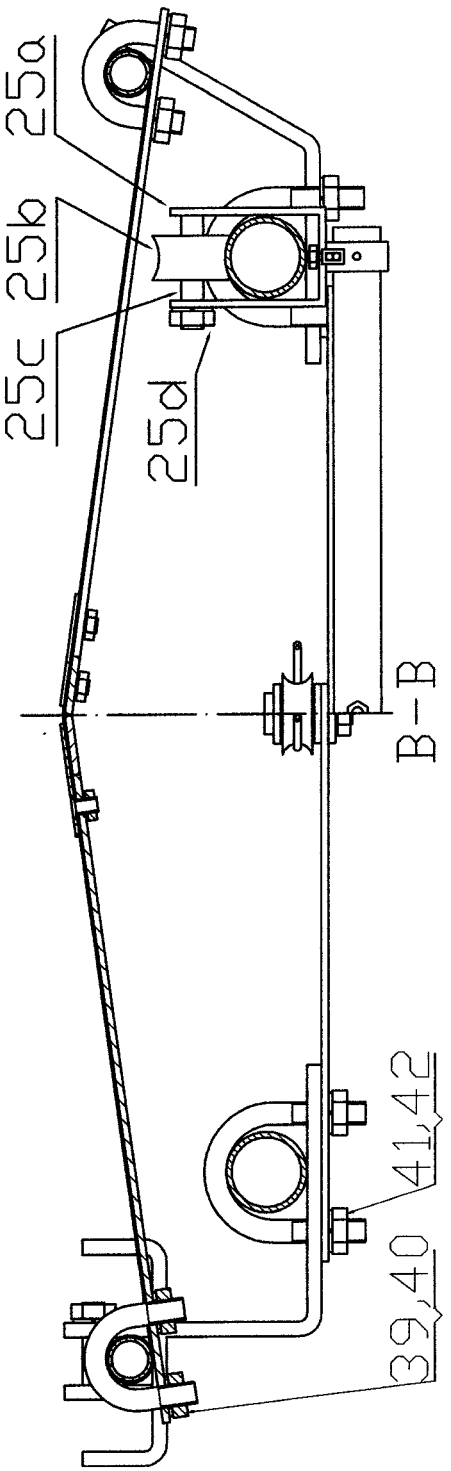

Fig.2

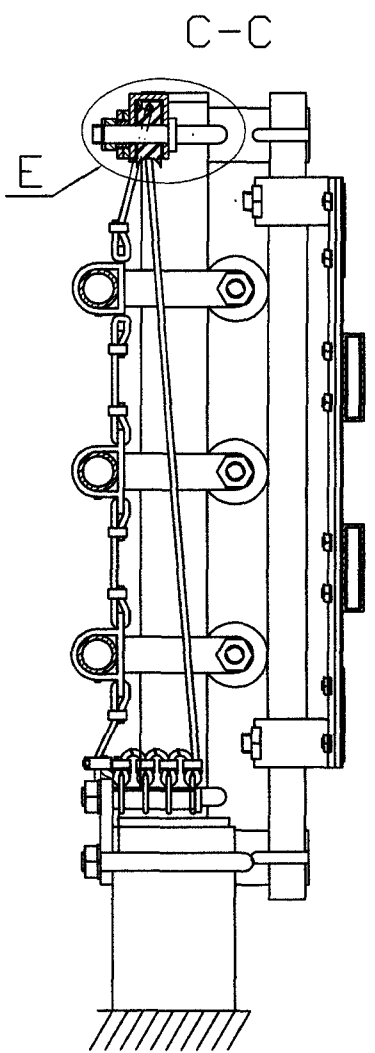

Fig.4

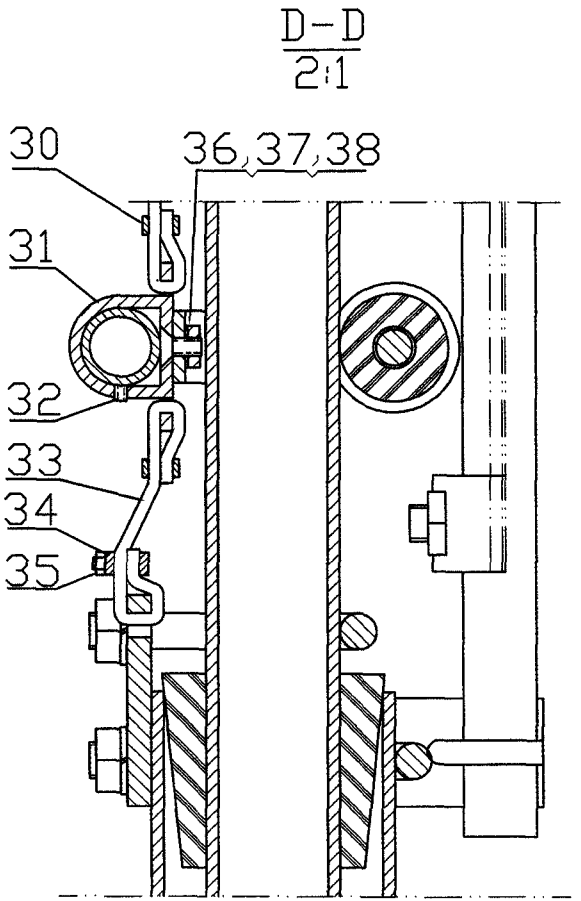

Fig.6

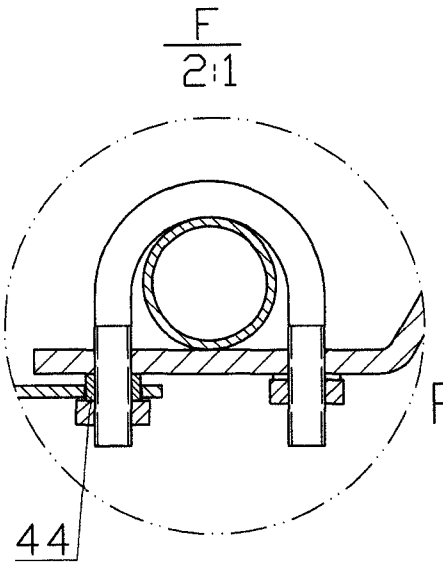

Fig.7

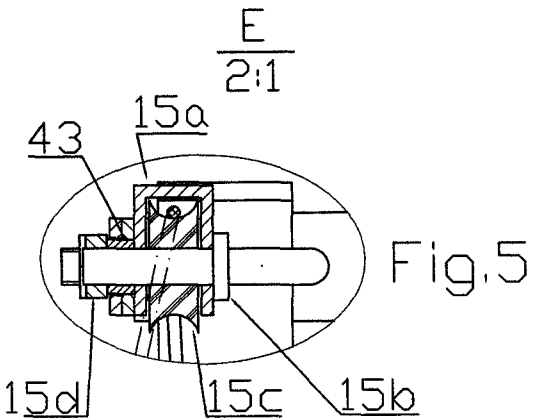

Fig.5

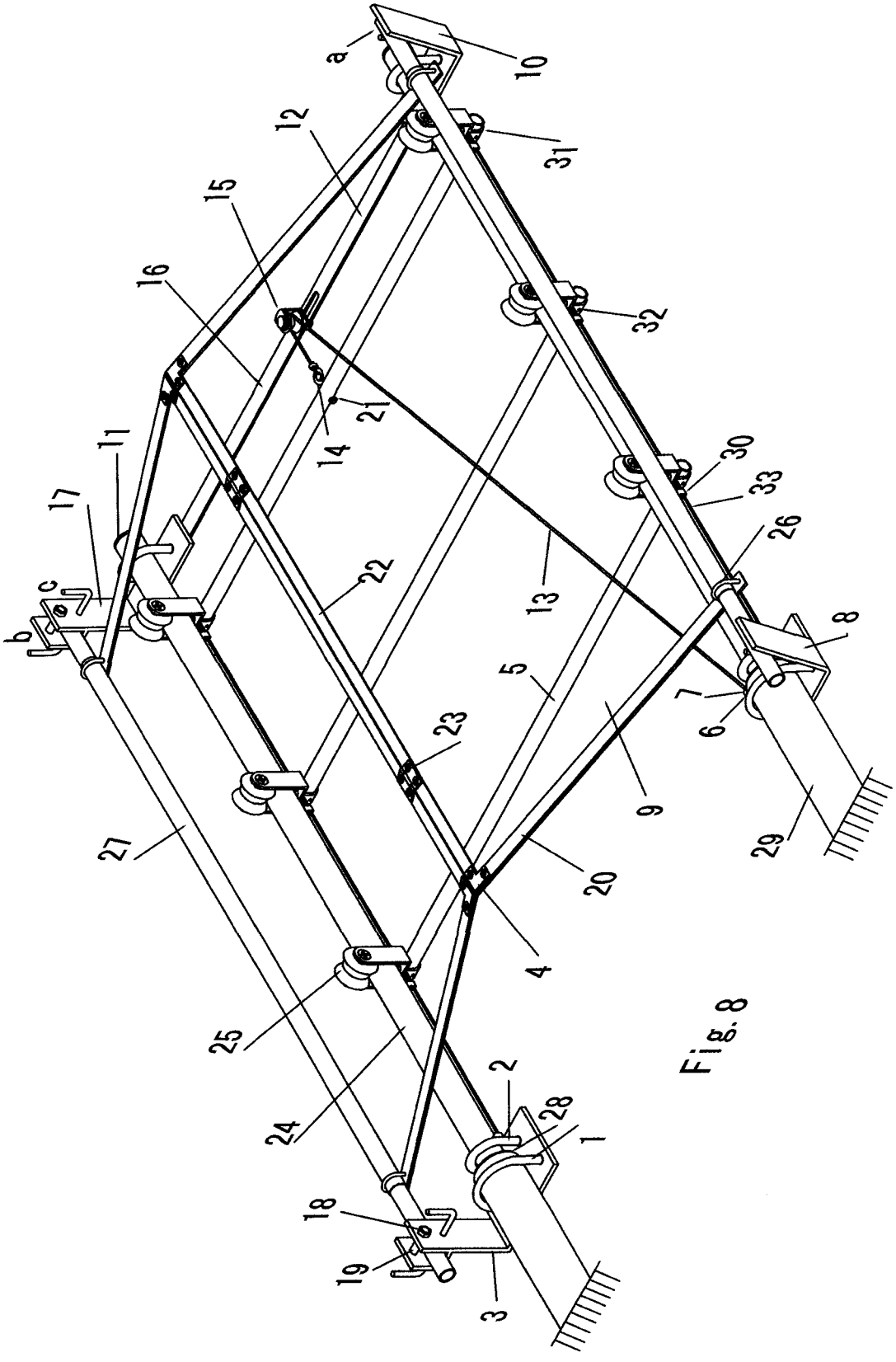
a
10
12
31
15
16
32
21
14
11
30
33
17
26
22
13
b
c
8
5
7
6
23
9
29
27
20
4
25
2
24
28
1
18
19
3

Fig. 8

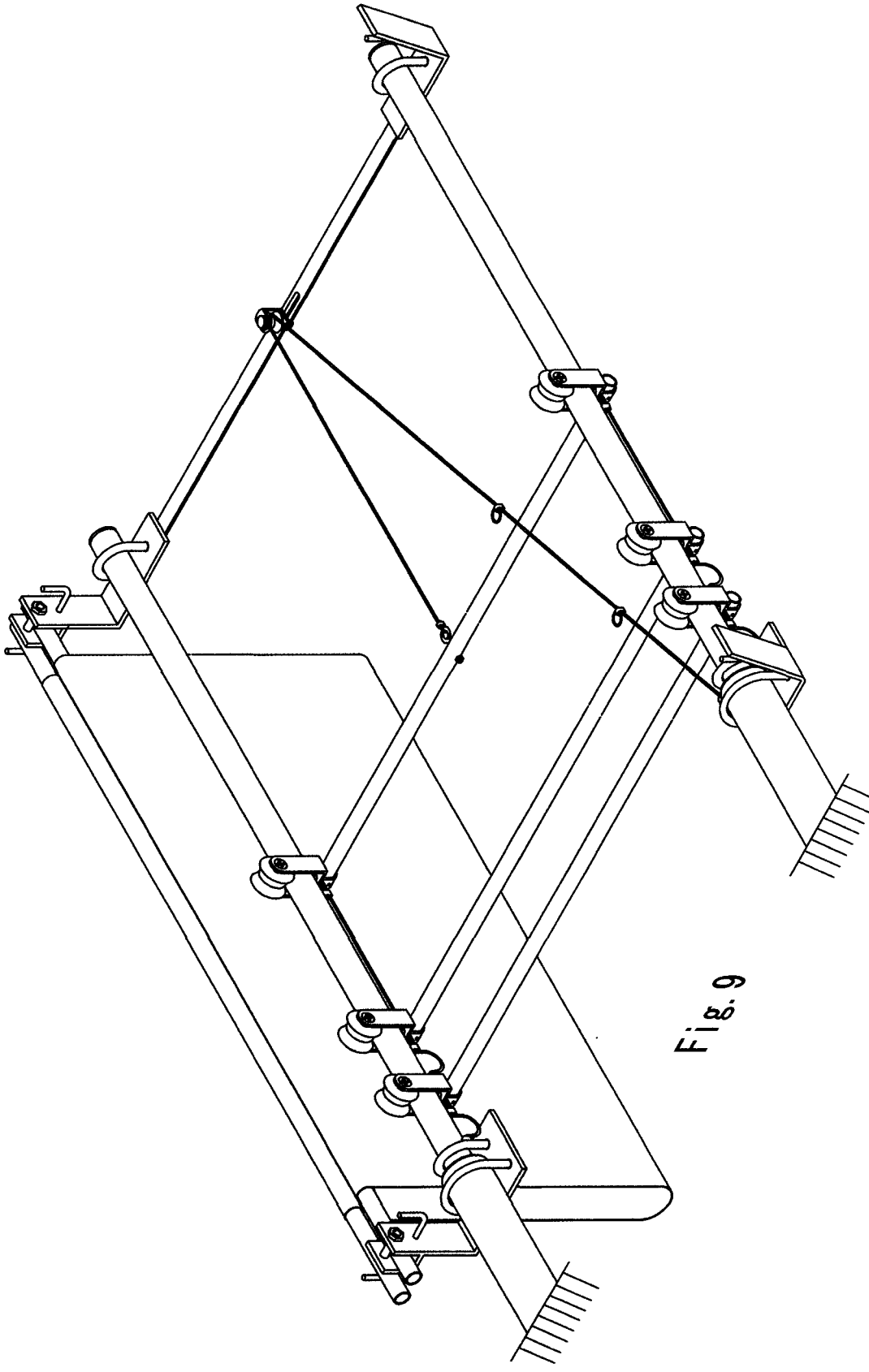

Fig 9

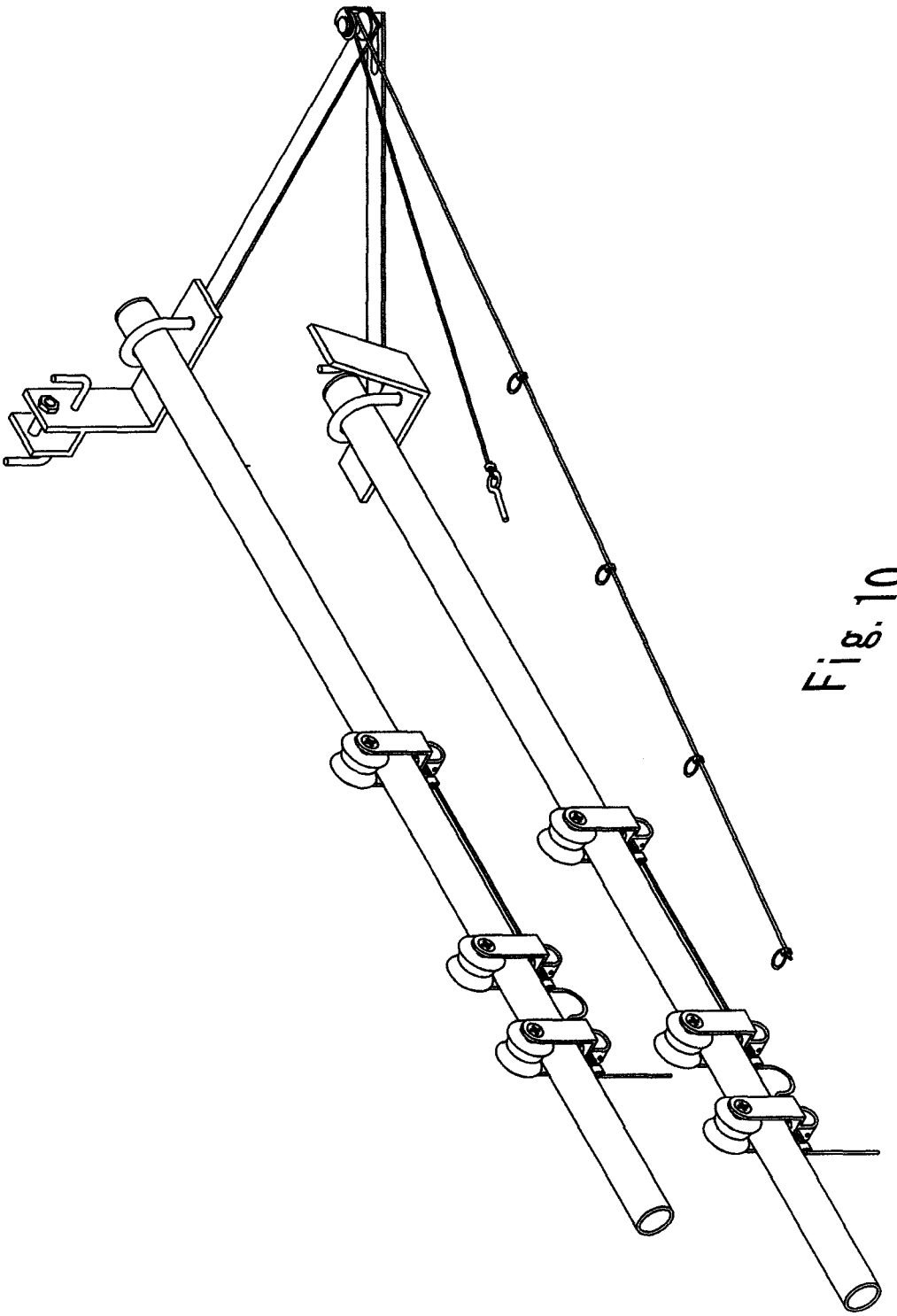

Fig. 10