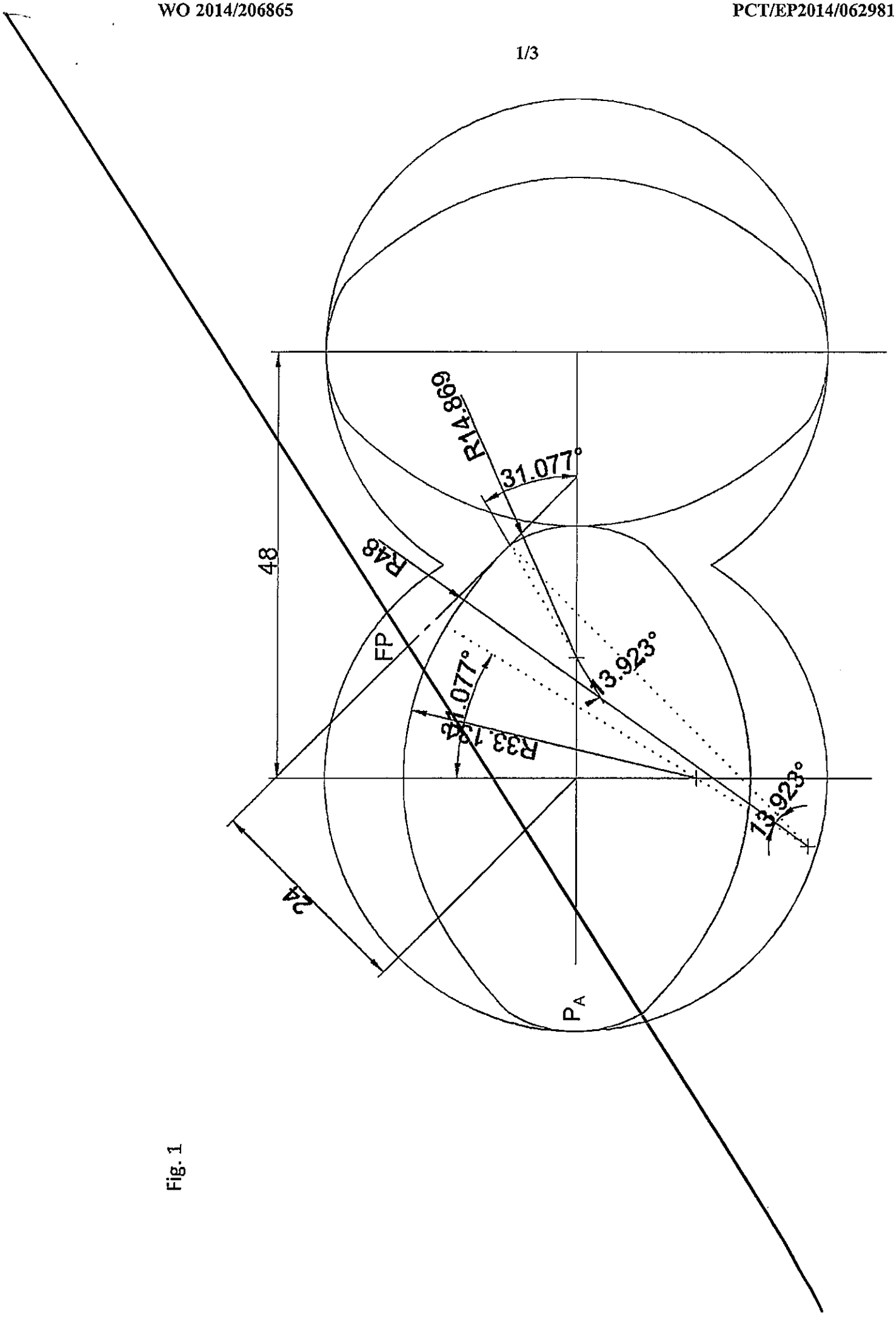

Fig. 1

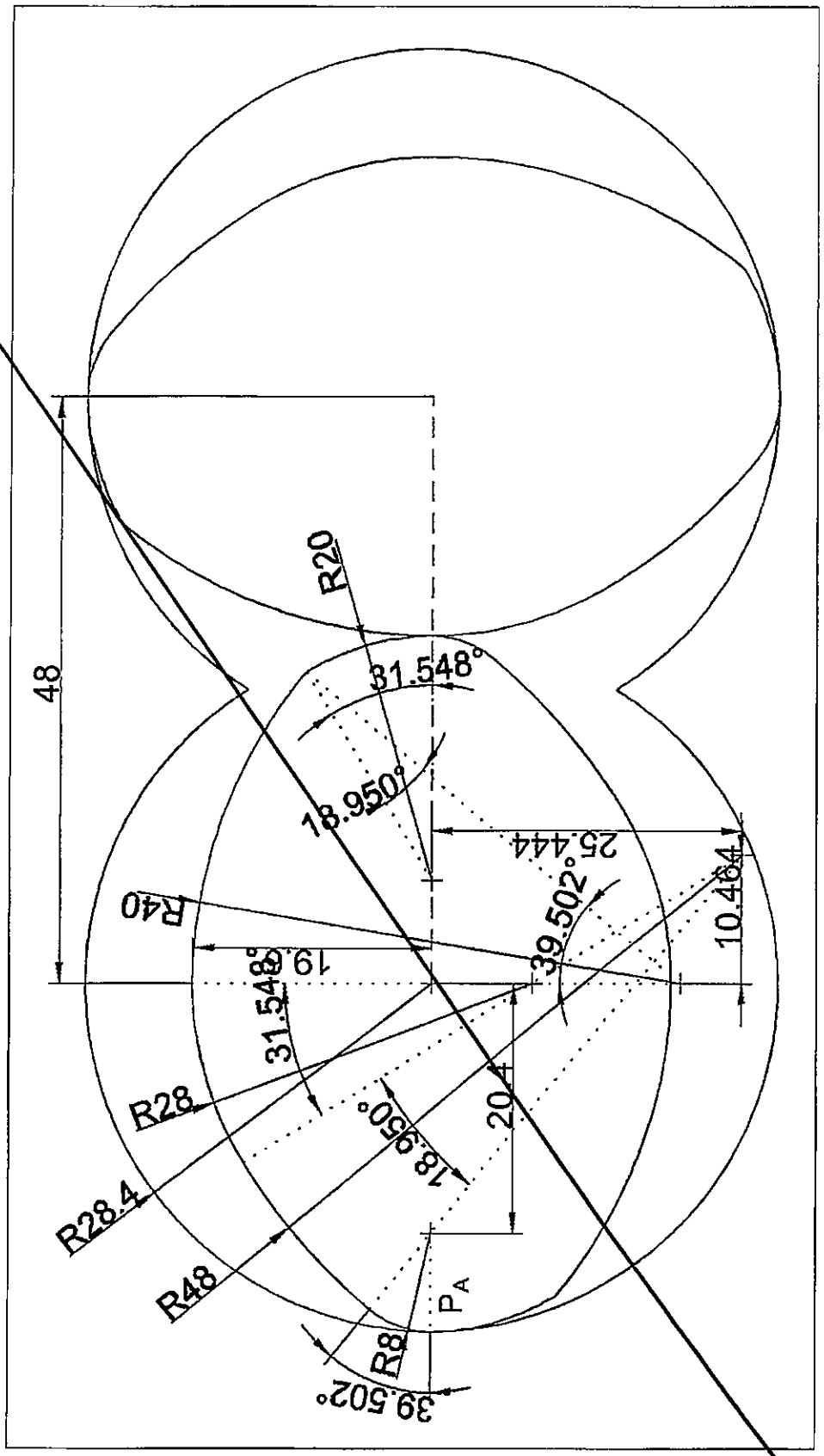
R20
31.548°
48
18.950°
25.444
R40
39.502°
10.484
19.548°
31.548°
R28
18.950°
20
R28.4
R48
PA
R8
39.502°

Fig. 2

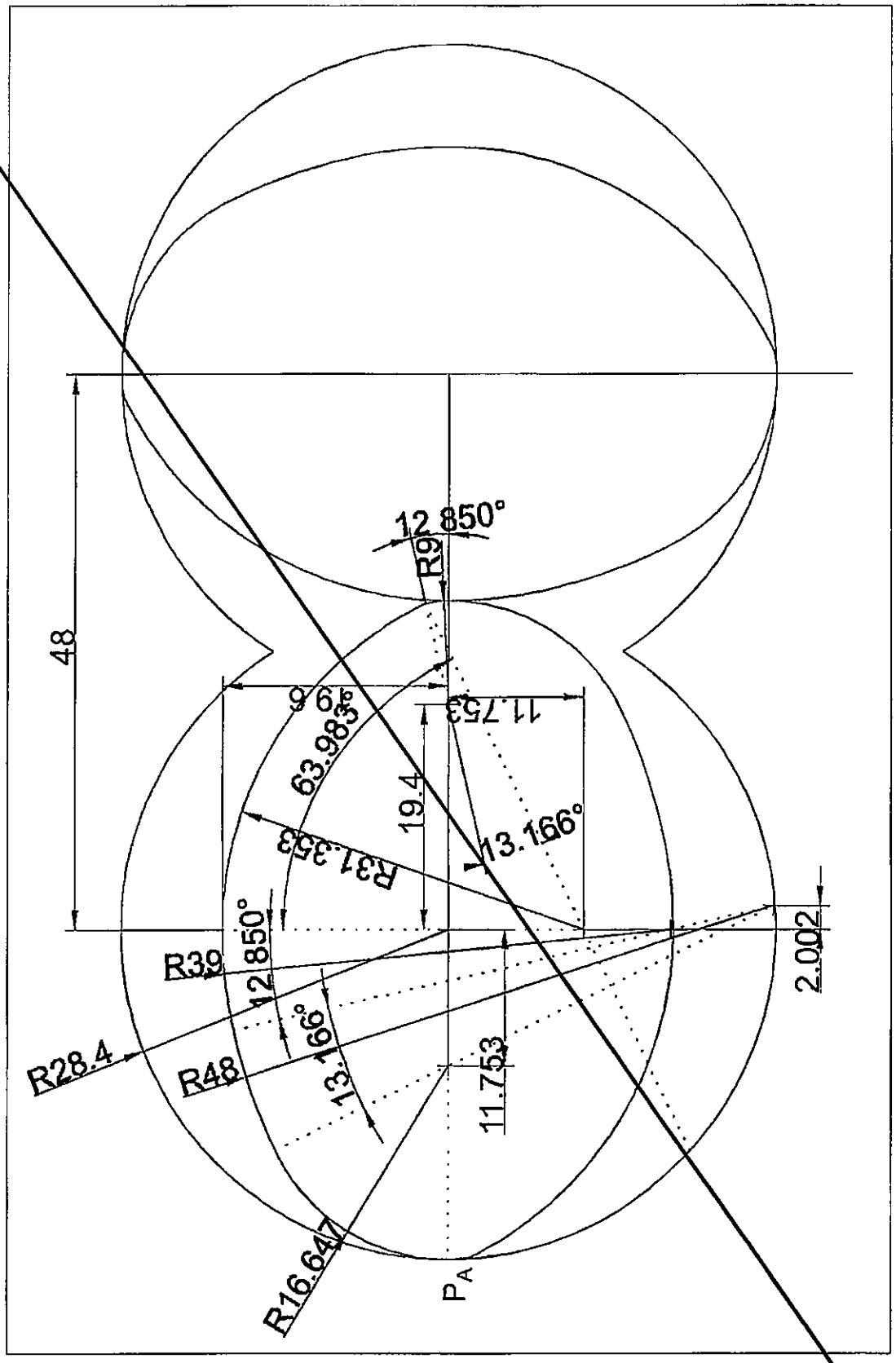
12.850°
R9
48
9.6
11.753
63.983°
19.4
R31.353
13.166°
R39
12.850°
2.002
R28.4
R48
13.166°
11.753
R16.647
PA

Fig. 3

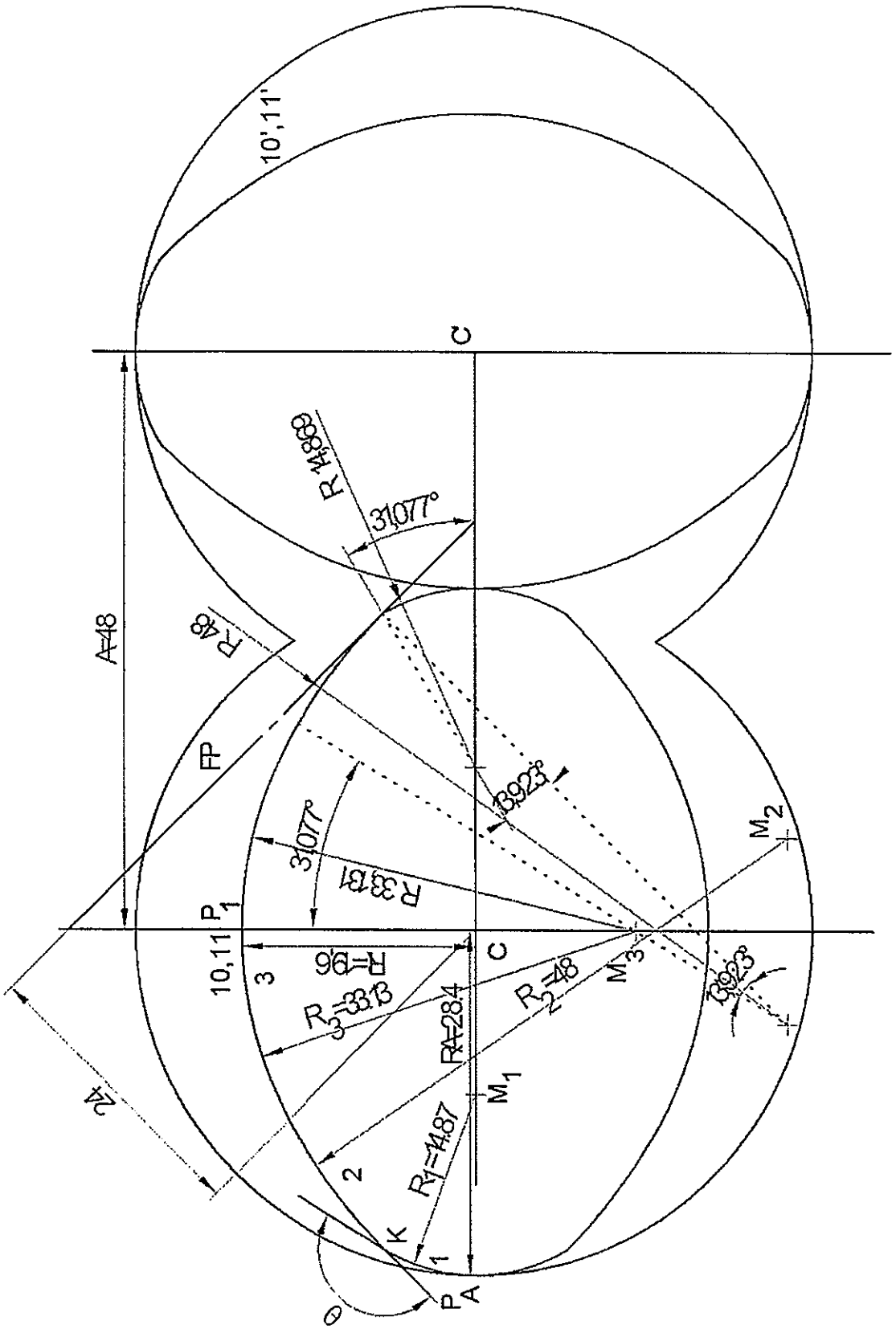
10',11'
C
R 14,869
31,077°
A=48
R 48
FP
13,923°
31,077°
R 33,131
P1
10,11
3
R=19,6
C
R3=33,13
R2=48
M3
M2
13,923°
RA=28,4
M1
24
2
R1=14,87
K
1
PA
θ

Fig. 1

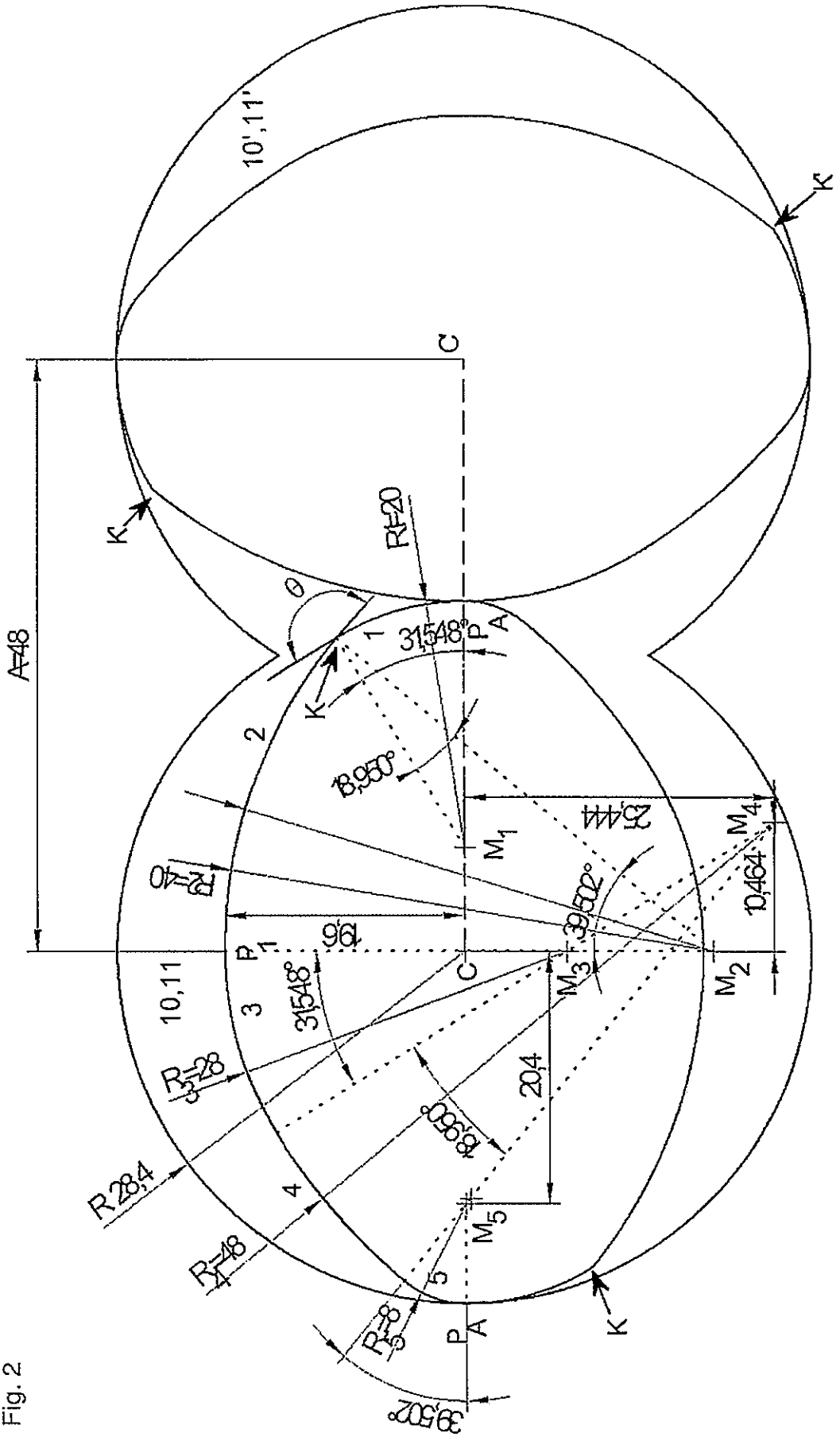
10',11'
K'
C
K
R1=20
θ
A=48
1
31,548°
P
A
2
K
18,950°
25,444
M1
M4
10,464
R2=40
39,502°
19,6
P
1
C
M3
M2
10,11
3
31,548°
R3=28
20,4
18,950°
R 28,4
4
M5
R4=48
5
R5=8
P
A
K
39,502°

Fig. 2

Fig. 3

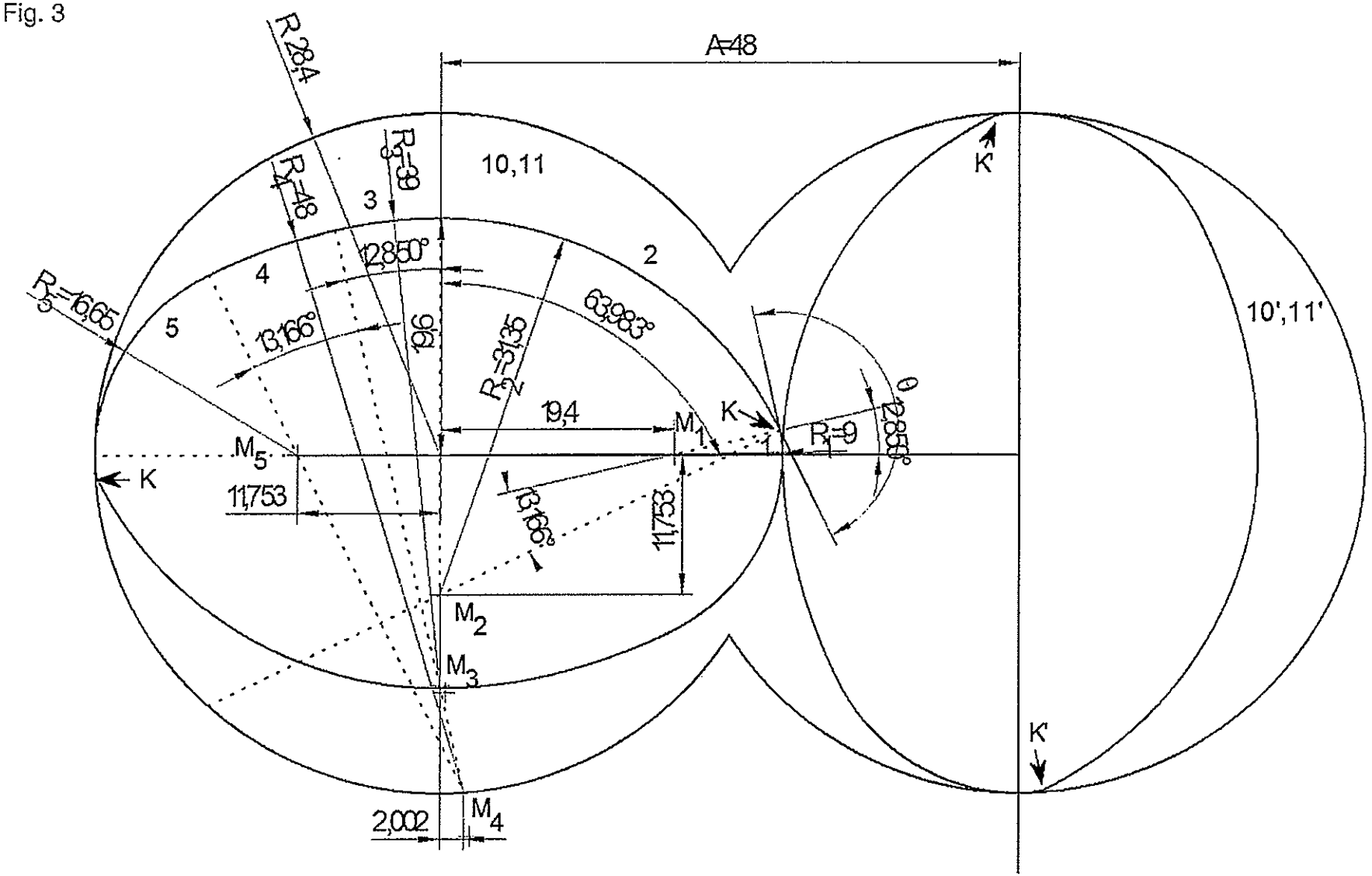
A=48
R 28,4
R4=48
R3=39
10,11
3
2
4
5
12,850°
13,166°
9,6
R5=16,65
R2=31,35
63,983°
19,4
M1
K
R1=9
θ
12,850°
M5
K
11,753
13,166°
11,753
M2
M3
M4
2,002
K'
K'
10',11'