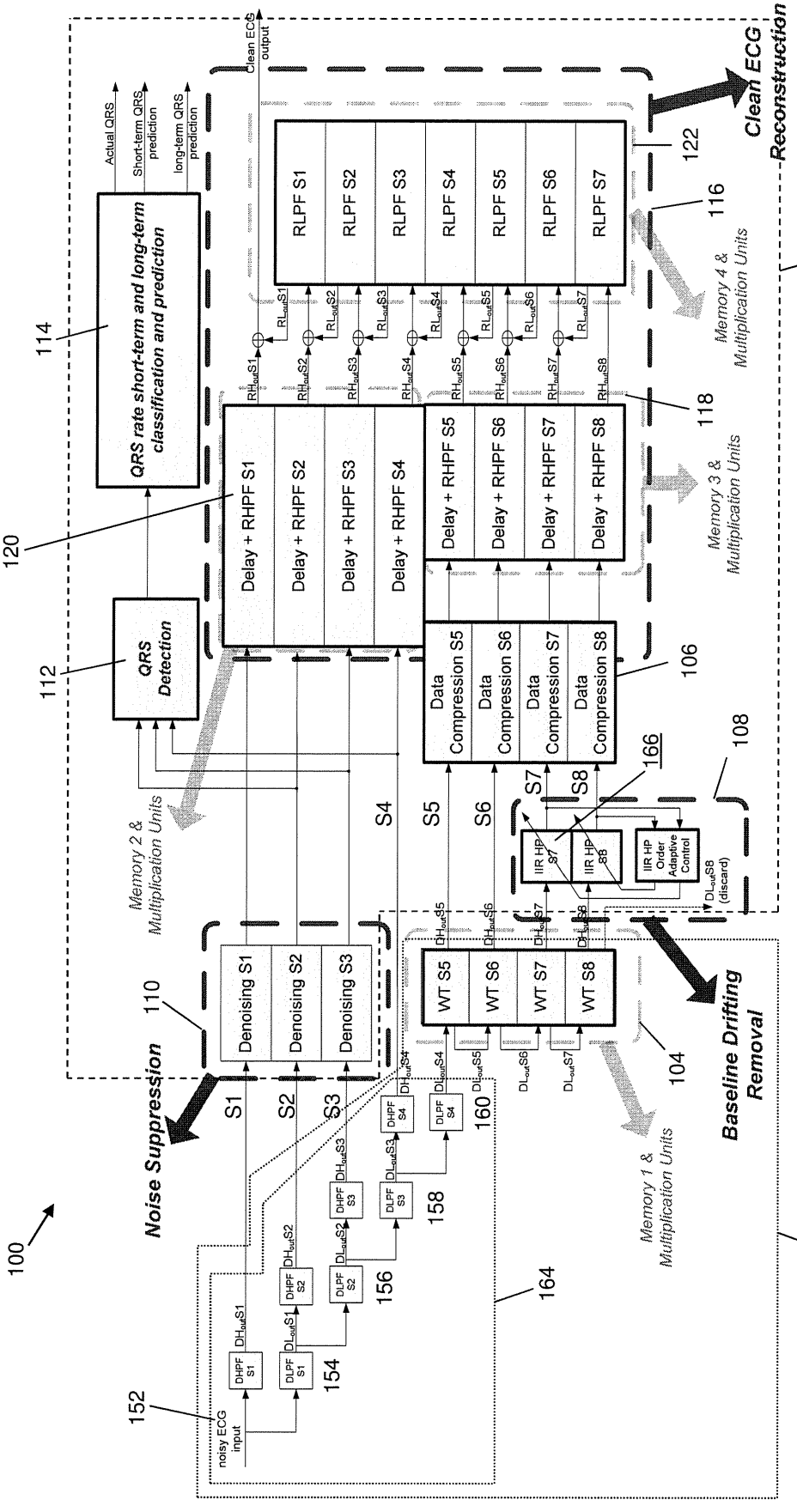
100
102
noisy ECG input
Noise Suppression
Baseline Drifting Removal
Clean ECG Reconstruction
Clean ECG output
Actual QRS
Short-term QRS prediction
long-term QRS prediction
QRS rate short-term and long-term classification and prediction
QRS Detection
Denoising S1
Denoising S2
Denoising S3
WT S5
WT S6
WT S7
WT S8
Data Compression S5
Data Compression S6
Data Compression S7
Data Compression S8
Delay + RHPF S1
Delay + RHPF S2
Delay + RHPF S3
Delay + RHPF S4
Delay + RHPF S5
Delay + RHPF S6
Delay + RHPF S7
Delay + RHPF S8
RLPF S1
RLPF S2
RLPF S3
RLPF S4
RLPF S5
RLPF S6
RLPF S7
IIR HP S7
IIR HP S8
IIR HP Order Adaptive Control
Memory 1 & Multiplication Units
Memory 2 & Multiplication Units
Memory 3 & Multiplication Units
Memory 4 & Multiplication Units
110
112
114
116
118
120
122
104
106
108
150
152
154
156
158
160
164
166

Figure 1

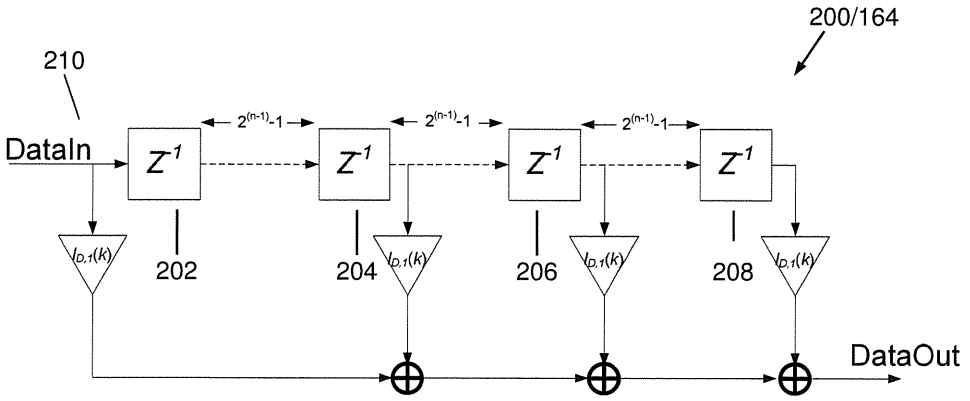

Figure 2

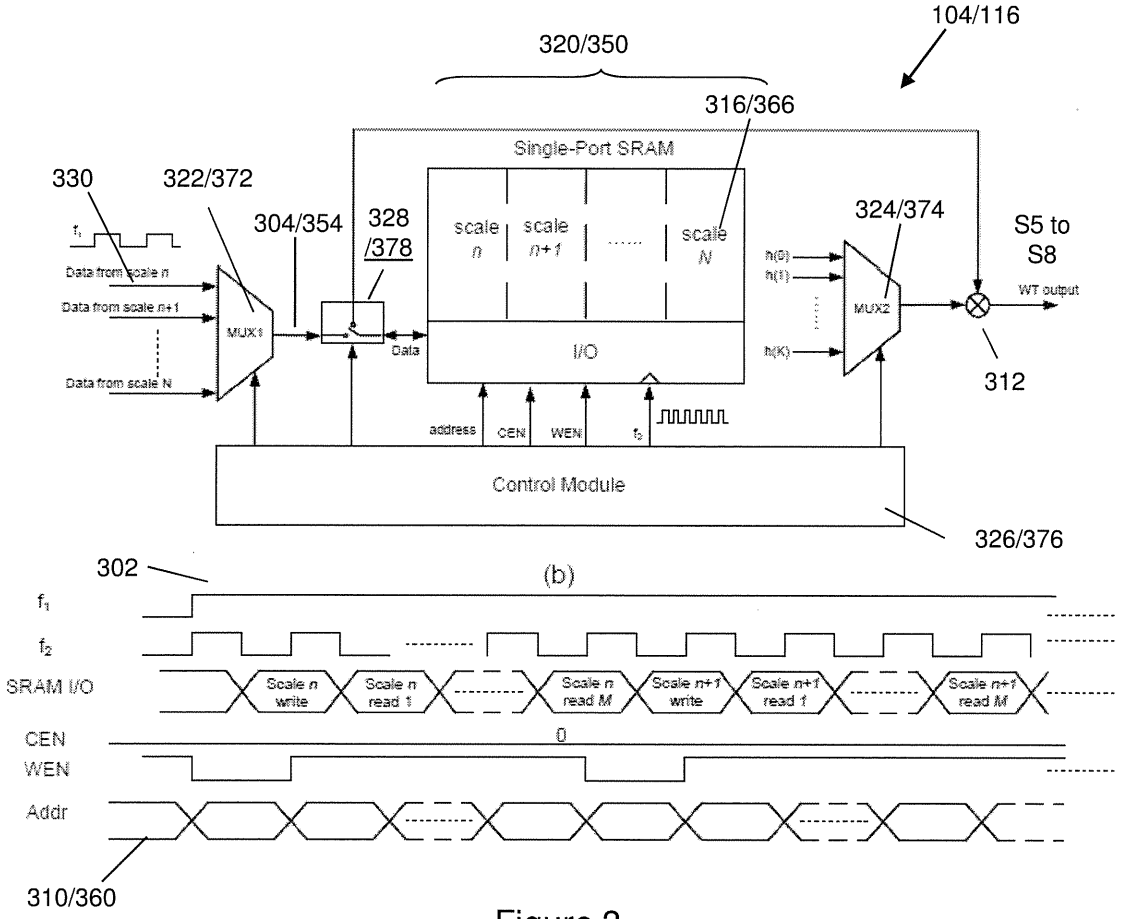

Figure 3

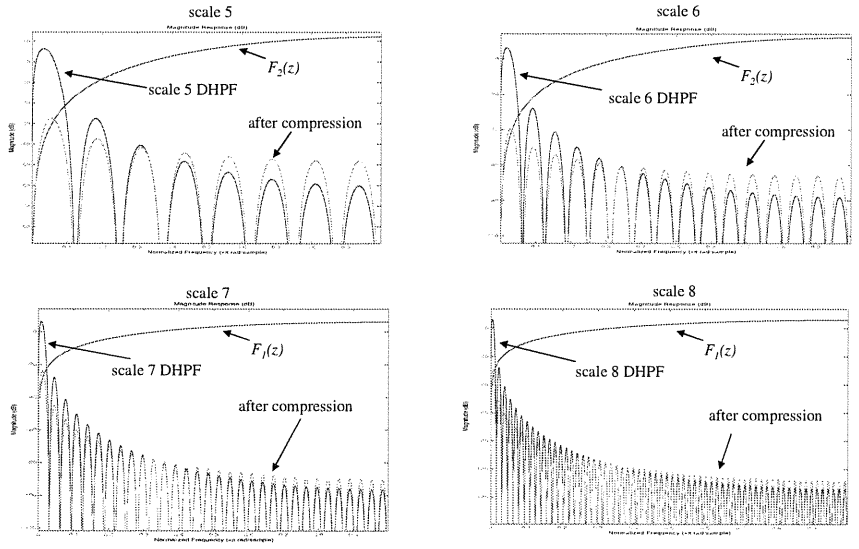

Figure 4

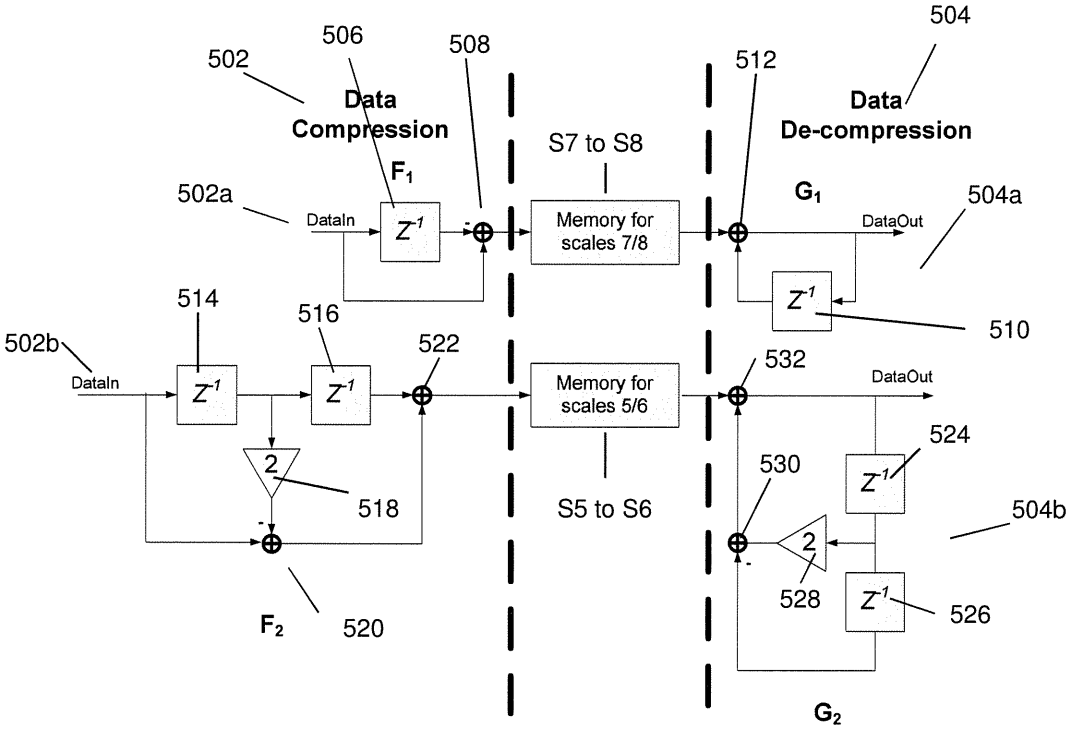

Figure 5

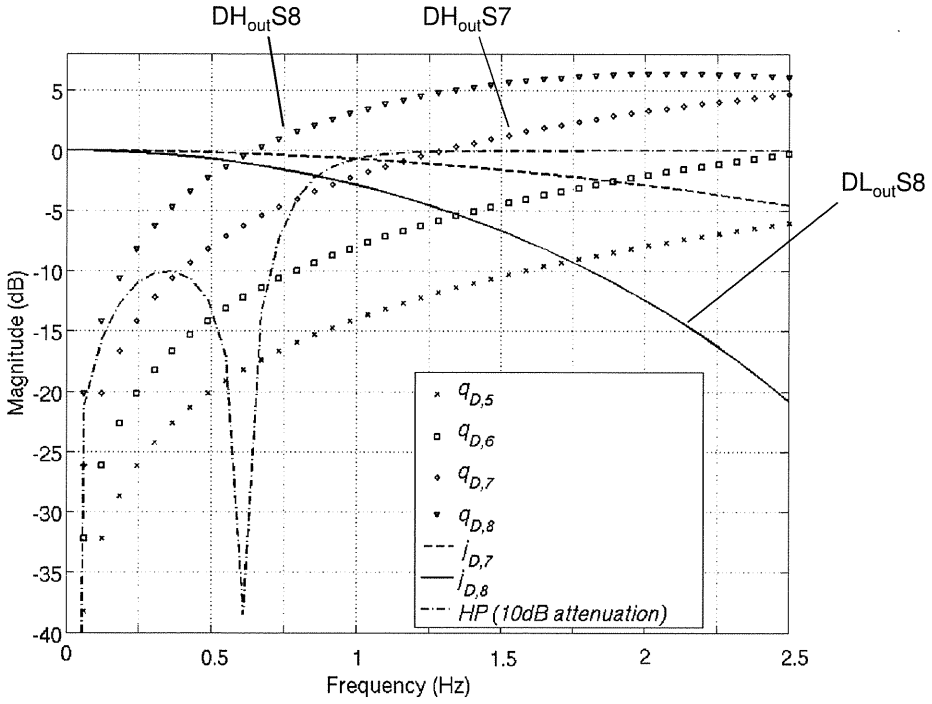
DH$_{out}$S8
DH$_{out}$S7
DL$_{out}$S8
Magnitude (dB)
Frequency (Hz)
5
0
-5
-10
-15
-20
-25
-30
-35
-40
0
0.5
1
1.5
2
2.5
$q_{D,5}$
$q_{D,6}$
$q_{D,7}$
$q_{D,8}$
$i_{D,7}$
$i_{D,8}$
HP (10dB attenuation)

Figure 6

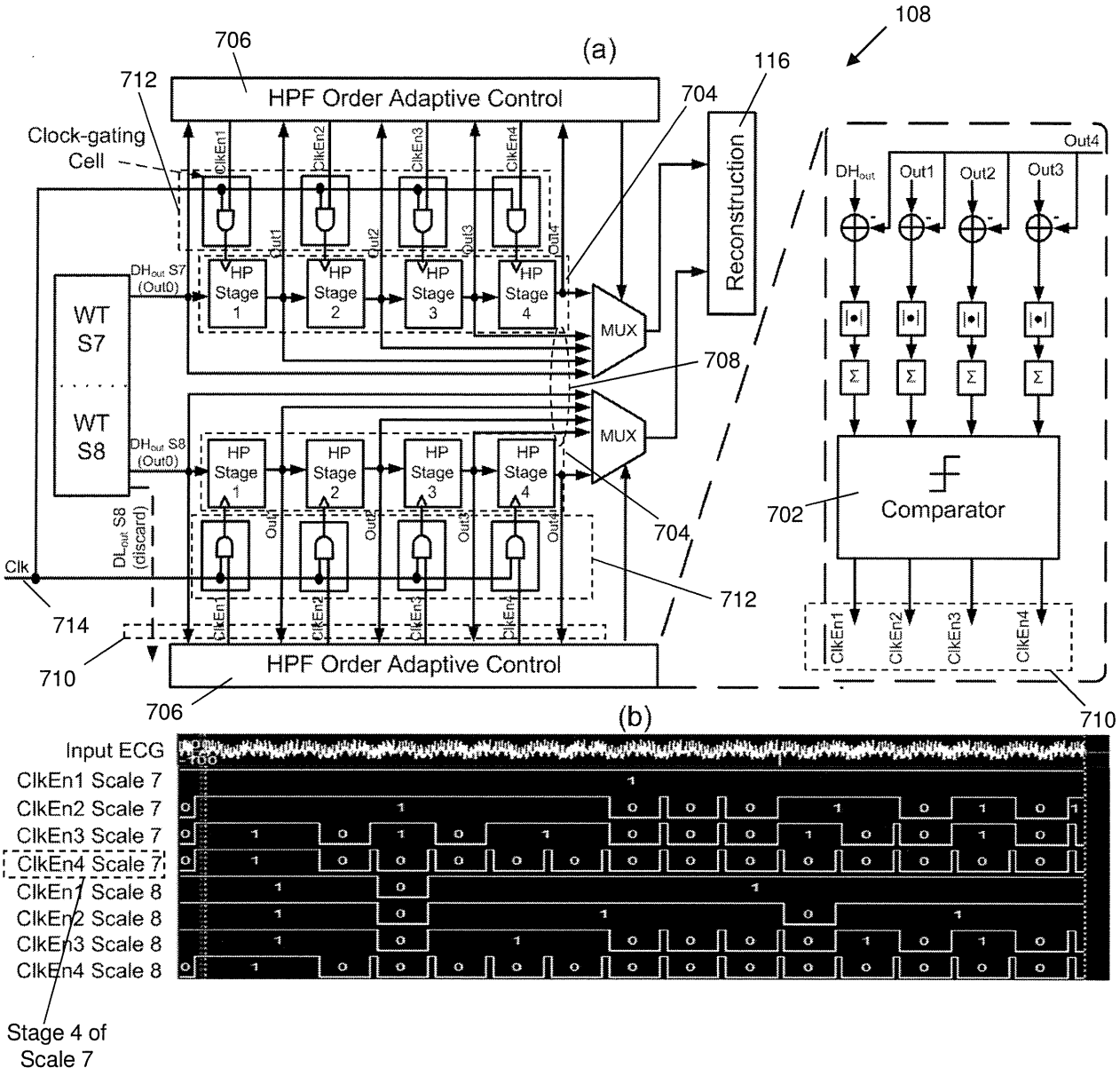
(a)
108
706
712
HPF Order Adaptive Control
116
704
Clock-gating Cell
ClkEn1
ClkEn2
ClkEn3
ClkEn4
Out1
Out2
Out3
Out4
Reconstruction
DHout S7 (Out0)
HP Stage 1
HP Stage 2
HP Stage 3
HP Stage 4
MUX
WT S7
WT S8
708
DHout S8 (Out0)
DLout S8 (discard)
Clk
714
710
712
HPF Order Adaptive Control
706
DHout
Comparator
702
(b)
Input ECG
ClkEn1 Scale 7
ClkEn2 Scale 7
ClkEn3 Scale 7
ClkEn4 Scale 7
ClkEn1 Scale 8
ClkEn2 Scale 8
ClkEn3 Scale 8
ClkEn4 Scale 8
Stage 4 of Scale 7

Figure 7

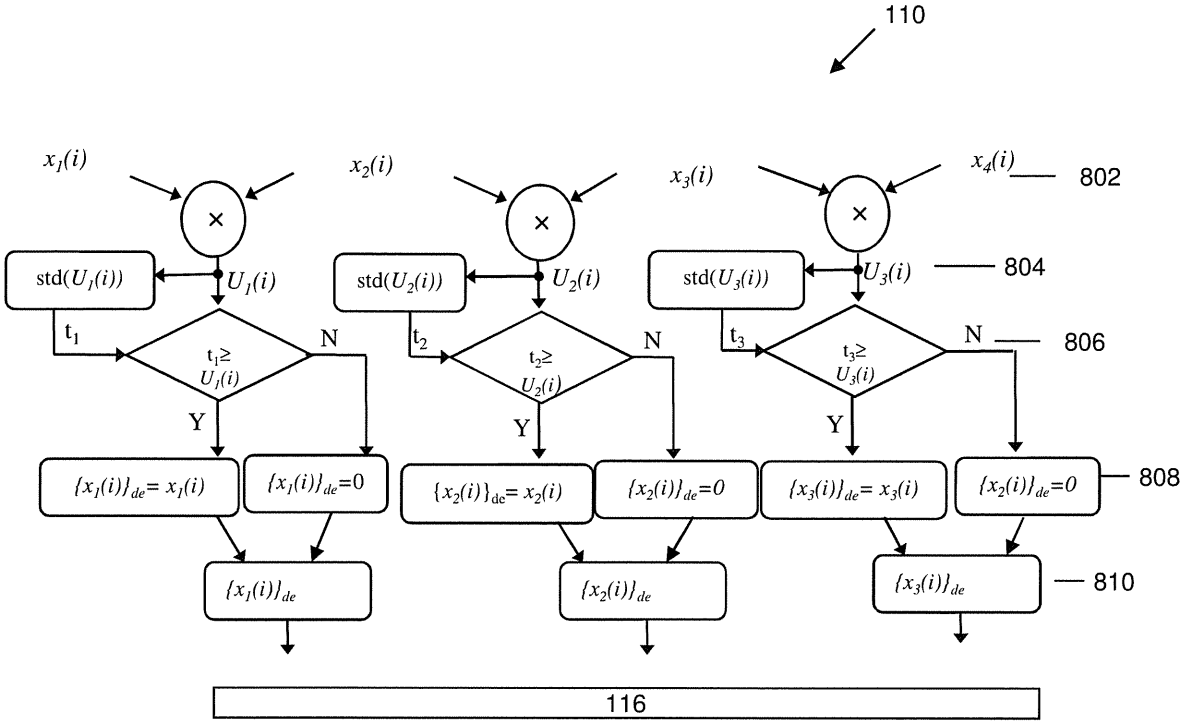

Figure 8

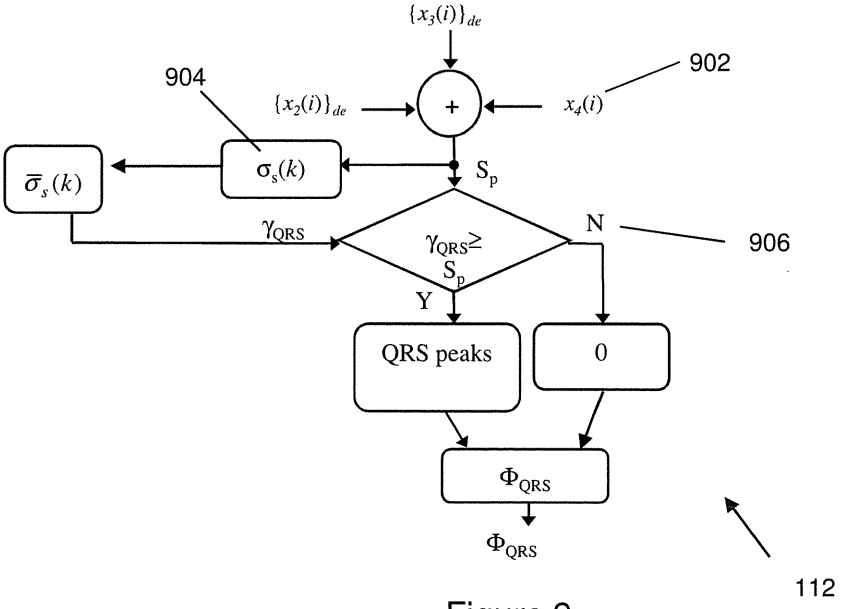

Figure 9

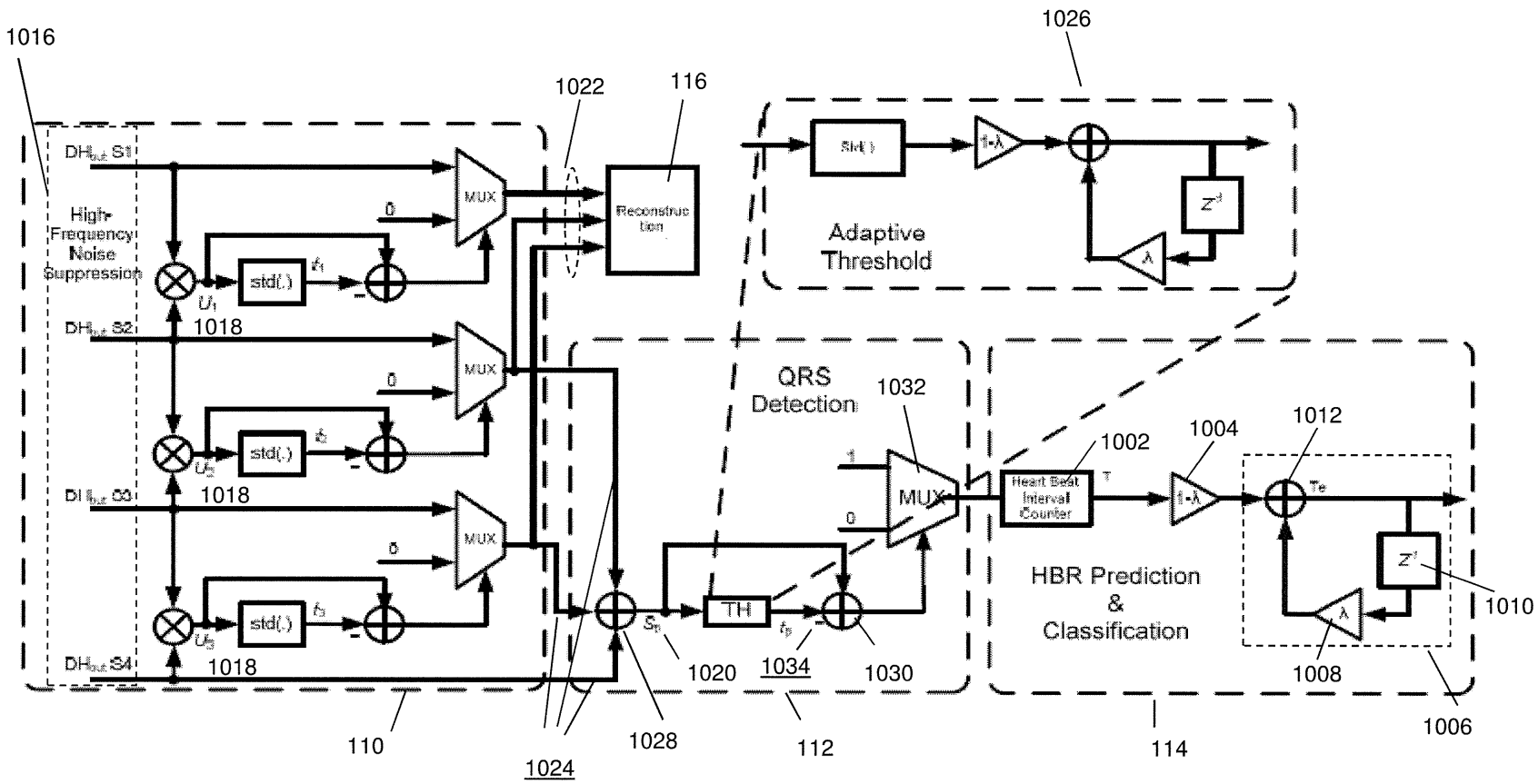
1016
1022
116
1026
High-Frequency Noise Suppression
MUX
std(.)
1018
Reconstruction
Adaptive Threshold
QRS Detection
1032
1002
1004
1012
Heart Beat Interval Counter
HBR Prediction & Classification
TH
1020
1034
1030
1028
1024
1008
1010
1006
110
112
114

Figure 10A

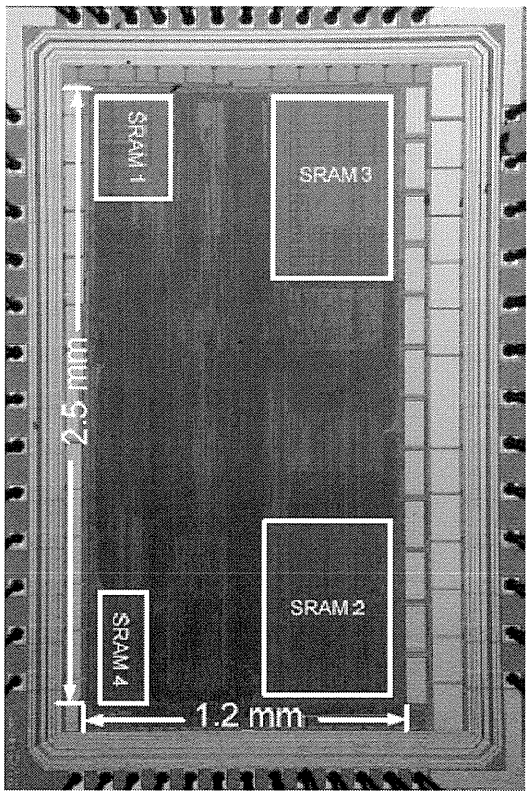

Chip Specifications	
CMOS Process	0.18 μm CMOS
Chip Area	1.2x2.5 mm^2
Number of standard cells	48 kbits
Memory	SRAM 1: 14400 units; SRAM 2: 61440 units; SRAM 3: 56960 units SRAM 4: 5680 units
Operation Frequency	32 kHz for SRAM 1 kHz for others
Supply Voltage	1 V
Power Consumption	29 μW
I/O Specifications	
Input	9 bits ECG signals
Output	9 bits clean ECG signals 1 bit QRS peak 9 bits long-term HBR monitoring 9 bits short-term HBR monitoring
Key SoC Features	
Baseline drift removal	Adaptive stage adjustment
QRS peak detection	≈ 99.8% detection ratio
HBR prediction & classification	Long-term & short-term prediction for the individual status of different patients
Clean ECG reconstruction	Convenient for monitoring and diagnosis

Figure 10B

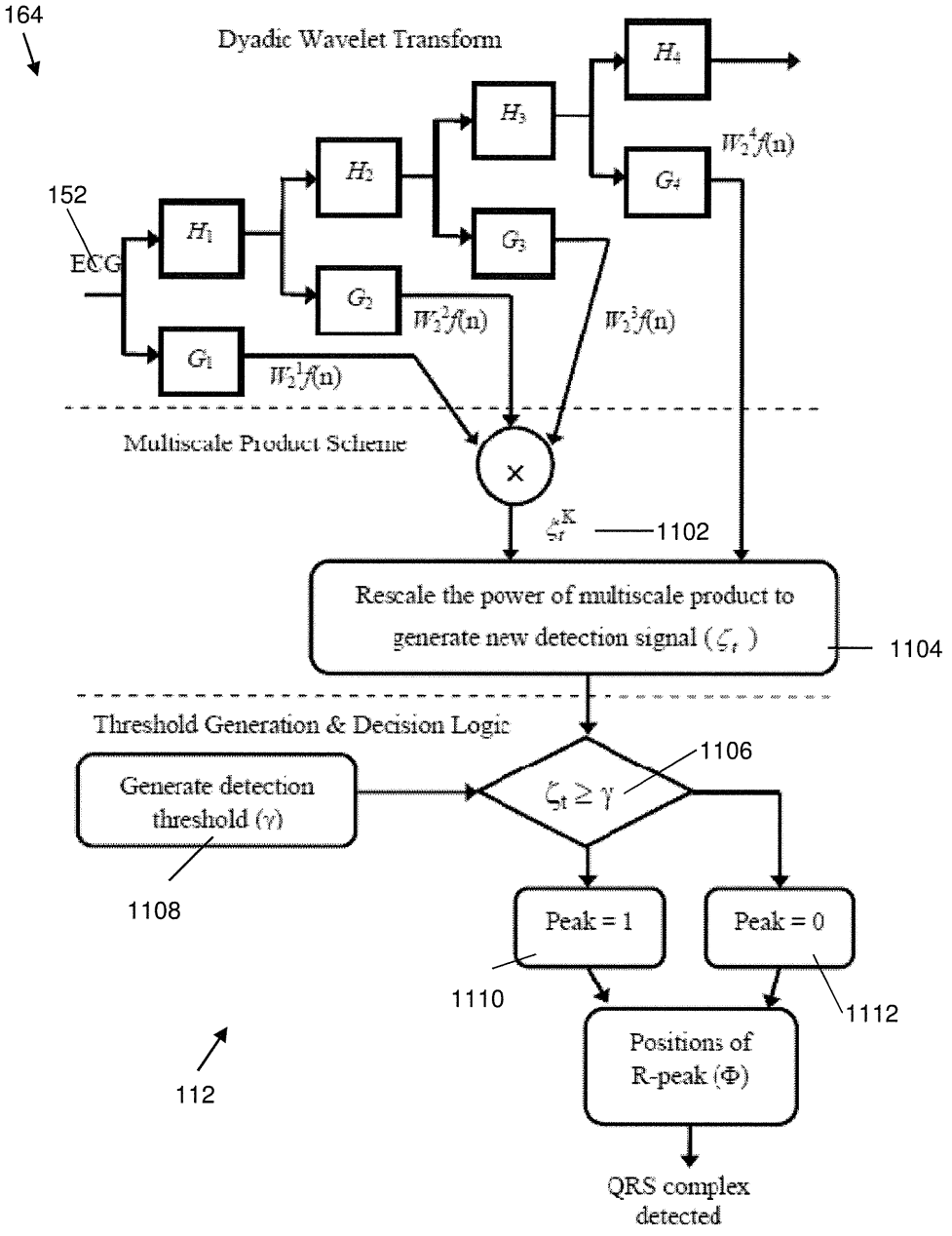
164
Dyadic Wavelet Transform
H_1
H_2
H_3
H_4
G_1
G_2
G_3
G_4
$W_2^1 f(n)$
$W_2^2 f(n)$
$W_2^3 f(n)$
$W_2^4 f(n)$
152
ECG
Multiscale Product Scheme
×
ζ_t^K
1102
Rescale the power of multiscale product to generate new detection signal (ζ_t)
1104
Threshold Generation & Decision Logic
Generate detection threshold (γ)
1108
$\zeta_t \geq \gamma$
1106
Peak = 1
Peak = 0
1110
1112
Positions of R-peak (Φ)
QRS complex detected
112

Figure 11

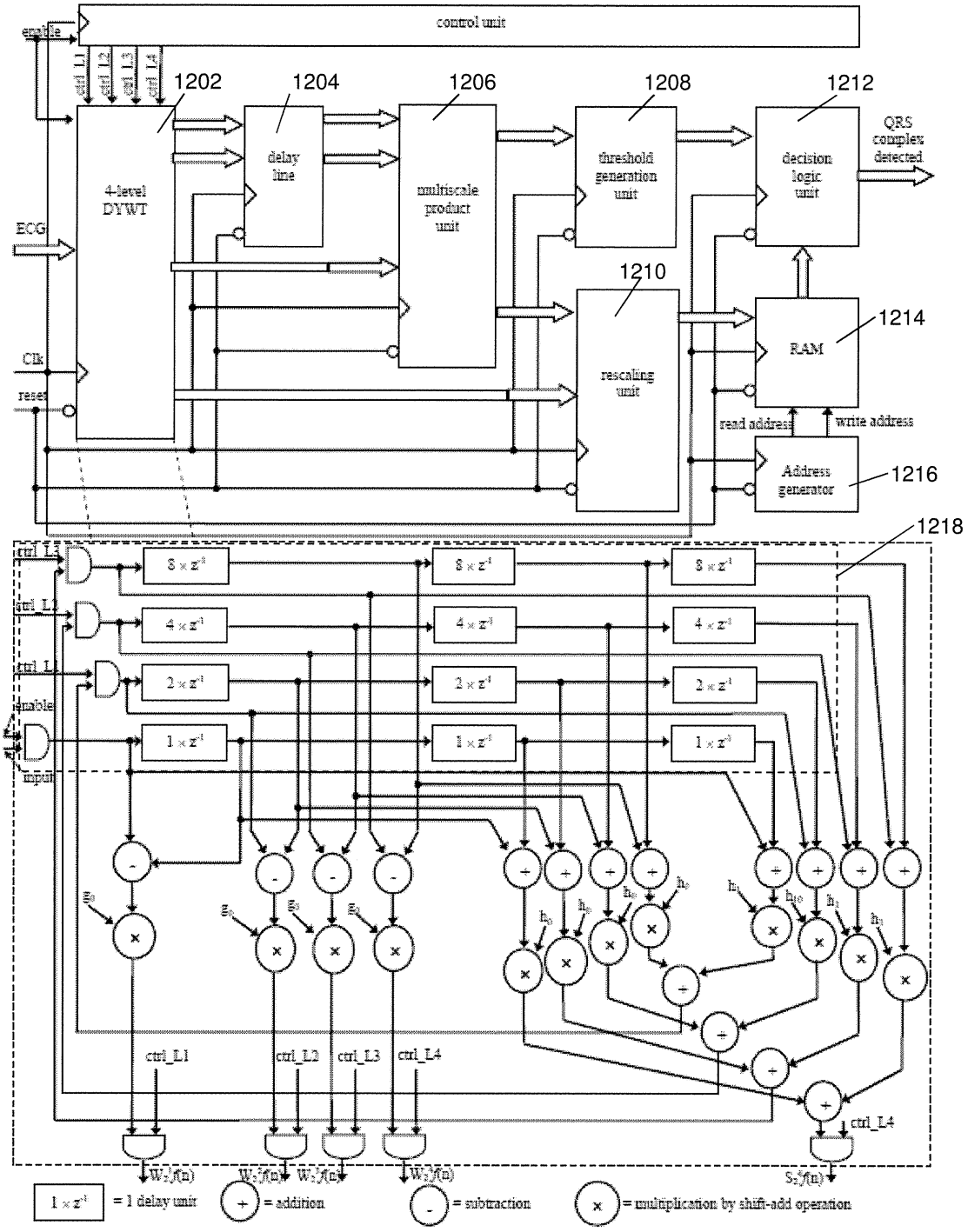
control unit
enable
ctrl_L1
ctrl_L2
ctrl_L3
ctrl_L4
1202
1204
1206
1208
1212
4-level DYWT
delay line
multiscale product unit
threshold generation unit
decision logic unit
QRS complex detected
ECG
Clk
reset
1210
rescaling unit
RAM
1214
read address
write address
Address generator
1216
1218
input
= 1 delay unit
= addition
= subtraction
= multiplication by shift-add operation

Figure 12

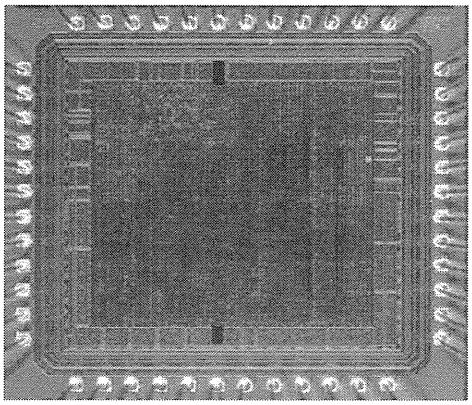

Figure 13

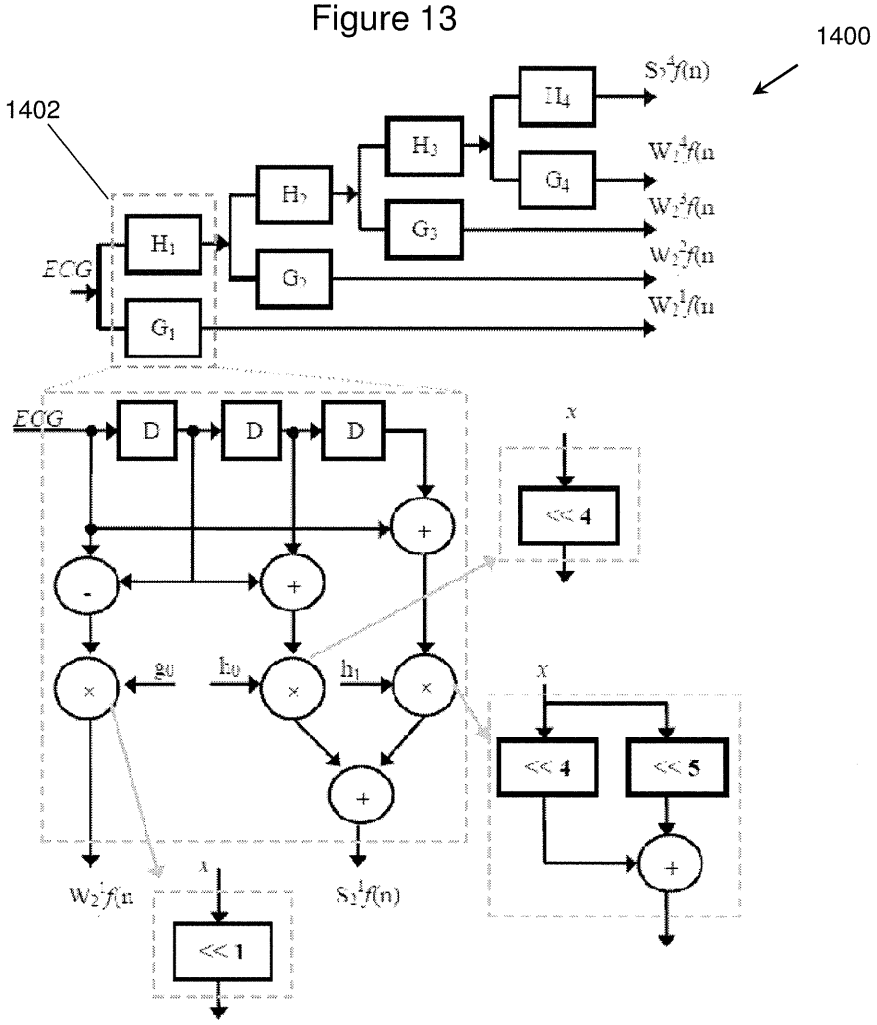

Figure 14

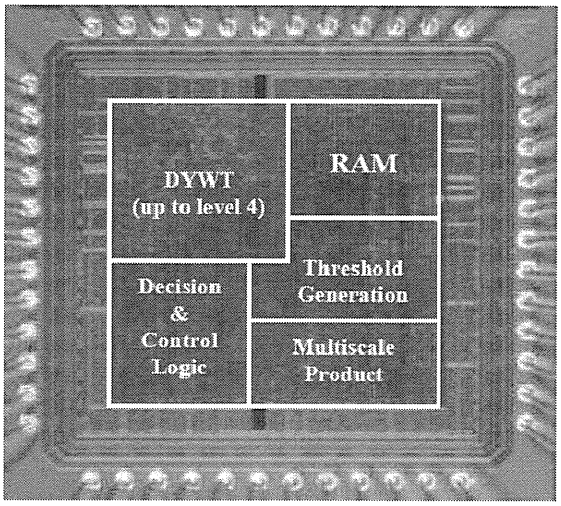

Figure 15

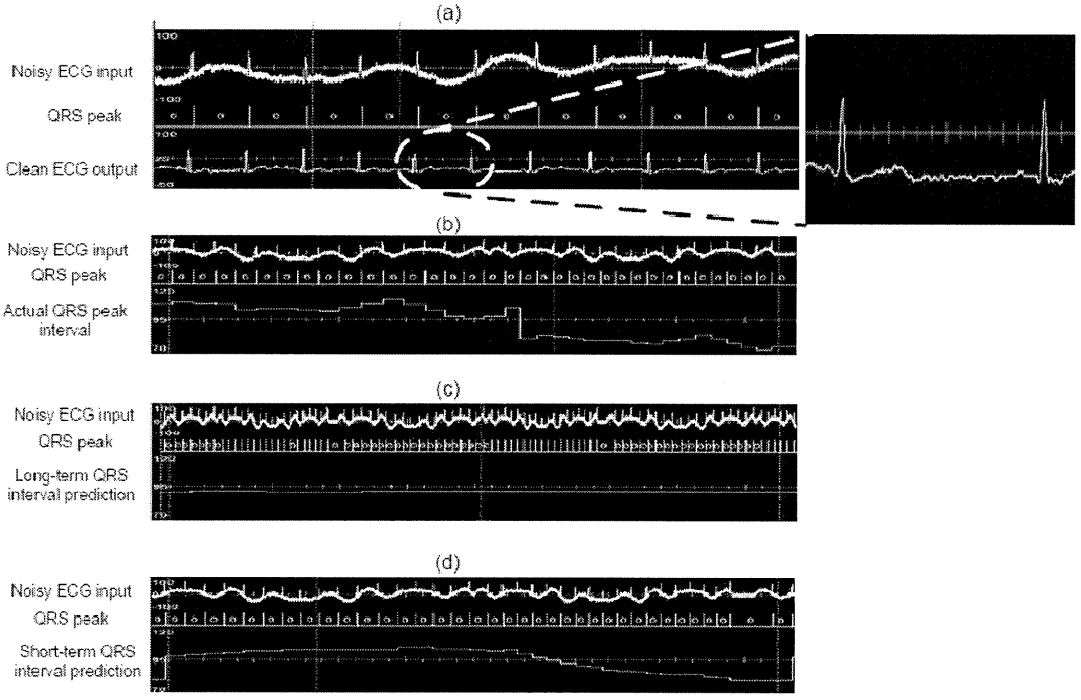

Figure 16

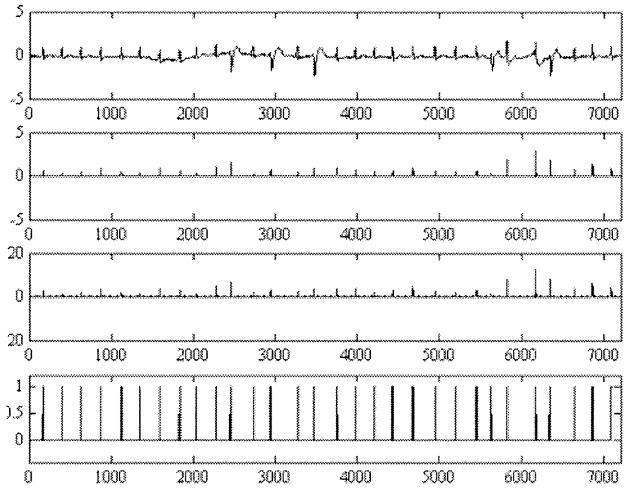

Figure 17A

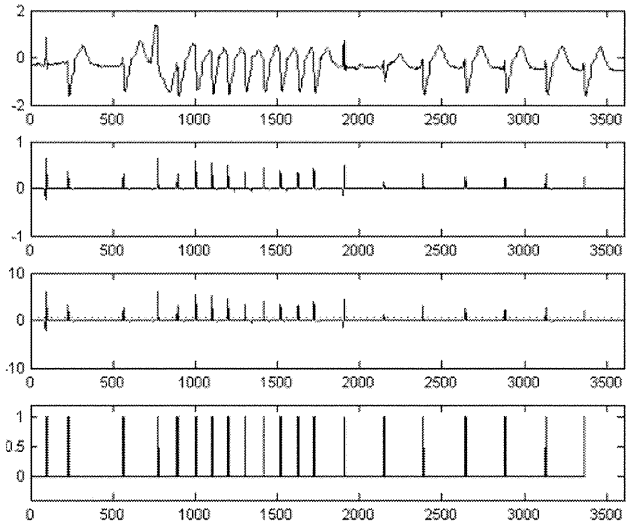

Figure 17B

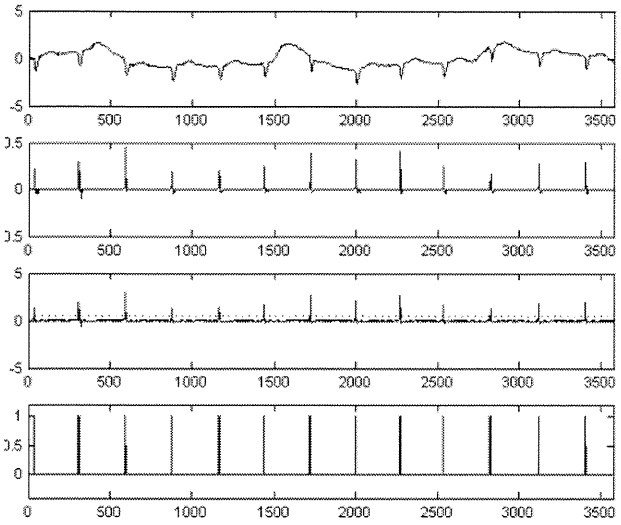

Figure 17C

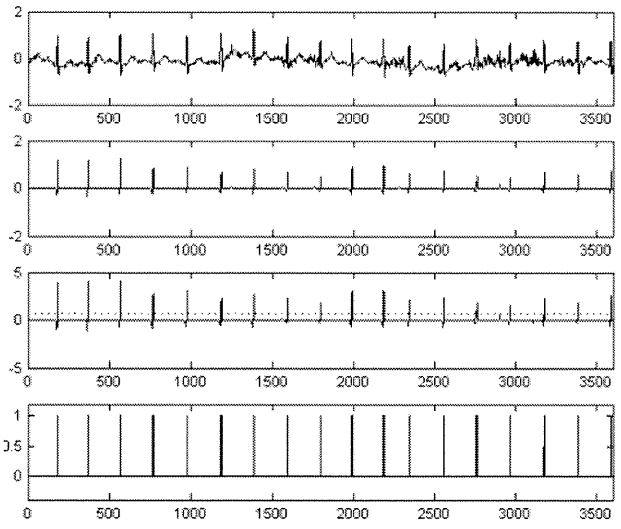

Figure 17D

TABLE I

THE PERFORMANCE OF THE ALGORITHM FOR THE MIT/BIH ARRHYTHMIA DATABASE

record	TP	FP	FN	FP + FN	Se (%)	+P (%)
100	2273	0	0	0	100.00	100.00
101	1865	0	2	2	99.89	100.00
102	2187	4	25	29	98.87	99.82
103	2084	0	1	1	99.95	100.00
104	2229	1	1	2	99.95	99.95
105	2572	16	31	47	98.81	99.38
106	2027	1	15	16	99.2	99.95
107	2137	2	12	14	99.5	99.91
108	1763	1	22	23	98.77	99.95
109	2532	0	0	0	100.00	100.00
111	2124	0	1	1	99.95	100.00
112	2539	0	2	2	99.91	100.00
113	1795	0	0	0	100.00	100.00
114	1879	0	1	0	99.95	100.00
115	1953	2	2	4	99.91	99.91
116	2412	12	2	14	99.91	99.5
117	1535	0	0	0	100.00	100.00
118	2275	0	8	8	99.65	100.00
119	1987	2	0	2	100.00	99.91
121	1863	0	1	1	99.95	100.00
122	2476	0	1	1	99.95	100.00
123	1518	0	2	2	99.91	100.00
124	1619	1	0	1	100.00	99.95
200	2601	24	5	29	99.81	99.08
201	1963	2	55	57	97.27	99.91
202	2136	0	11	11	99.49	100.00
203	2980	15	7	22	99.77	99.2
205	2656	0	2	0	99.91	100.00
207	1860	19	45	64	97.64	98.99
208	2955	1	129	130	95.82	99.95
209	3005	1	1	0	99.95	99.95
210	2650	1	29	30	98.92	99.95
212	2748	1	1	2	99.95	99.95
213	3251	0	5	5	99.84	100.00
214	2262	1	2	3	99.91	99.95
215	3363	0	1	1	99.95	100.00
217	2208	1	49	50	97.83	99.95
219	2154	0	3	3	99.86	100.00
220	2048	0	0	0	100.00	100.00
221	2427	4	4	8	99.84	99.84
222	2483	1	11	12	99.55	99.95
223	2605	0	4	4	99.85	100.00
228	2053	1	6	7	99.71	99.95
230	2256	0	0	0	100.00	100.00
231	1571	1	1	2	99.95	99.95
232	1780	0	0	0	100.00	100.00
233	3079	2	1	3	99.91	99.95
234	2753	0	0	0	100.00	100.00
Total	109291	117	500	617	99.54	99.89

Figure 18

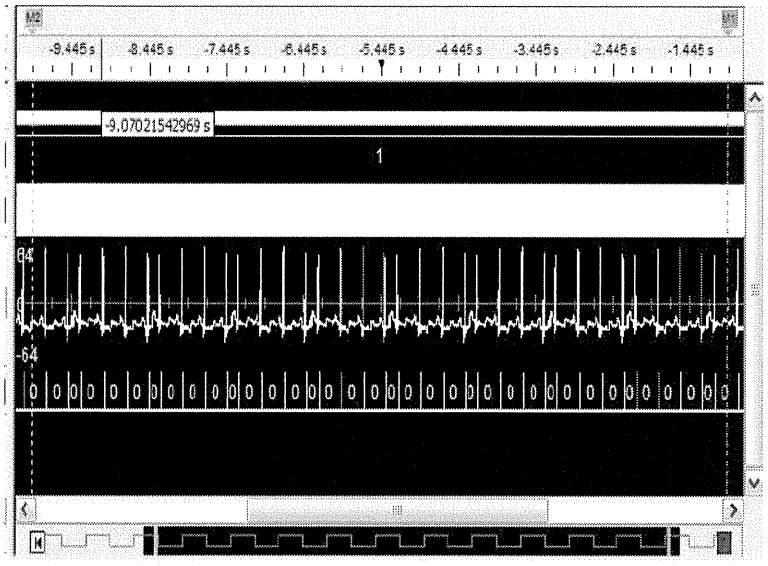

Figure 19

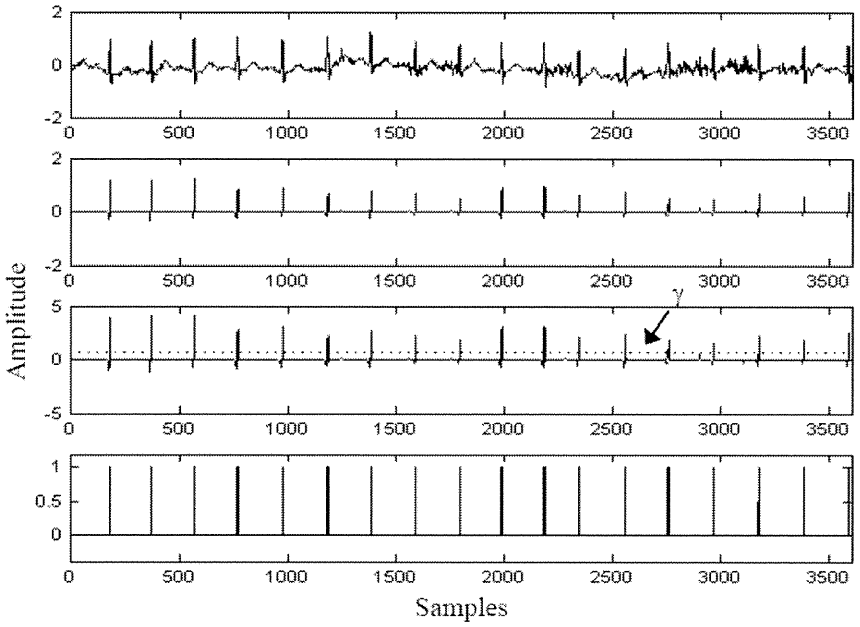

Figure 20

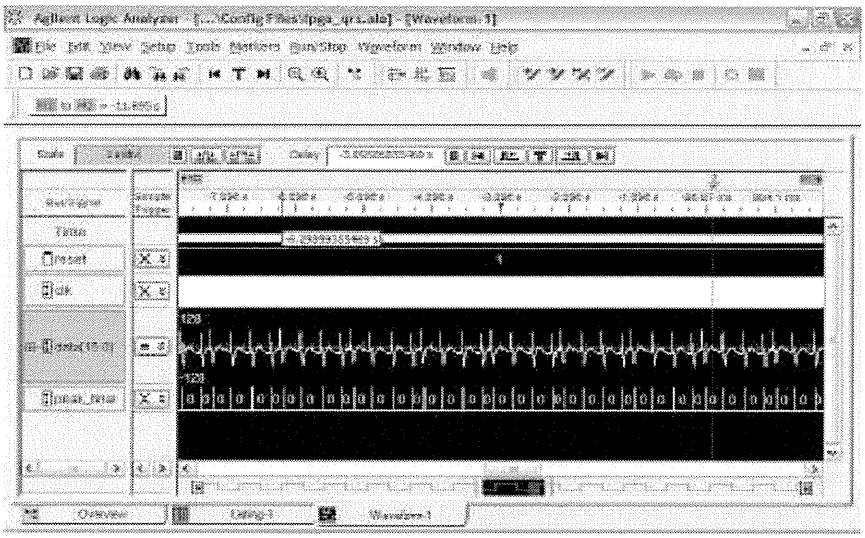
File Edit View Setup Tools Markers Run/Stop Waveform Window Help
Overview
Listing-1
Waveform-1

Figure 21