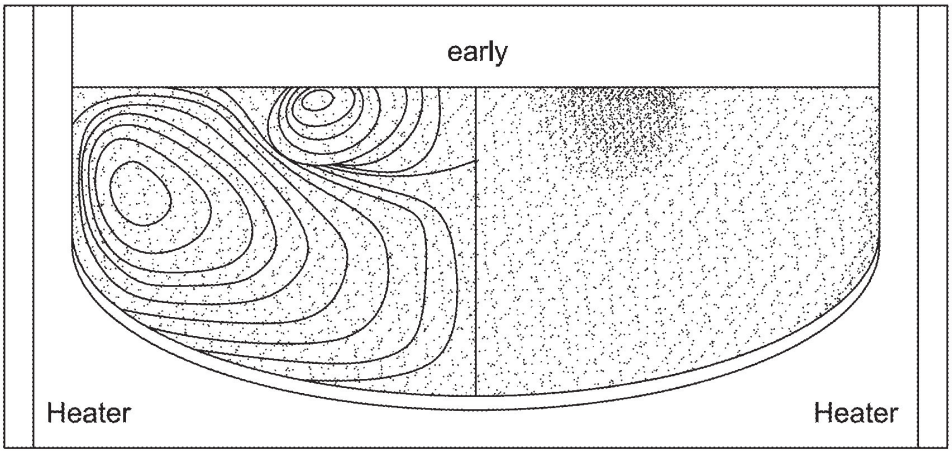

FIG. 1A

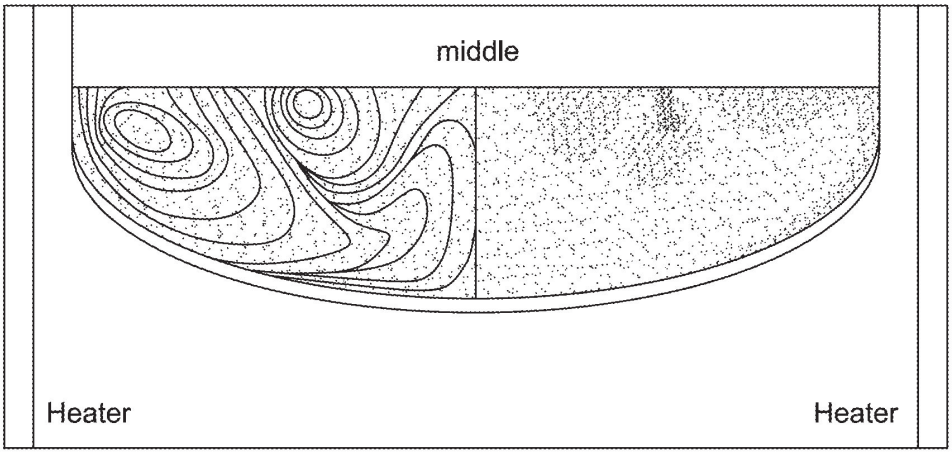

FIG. 1B

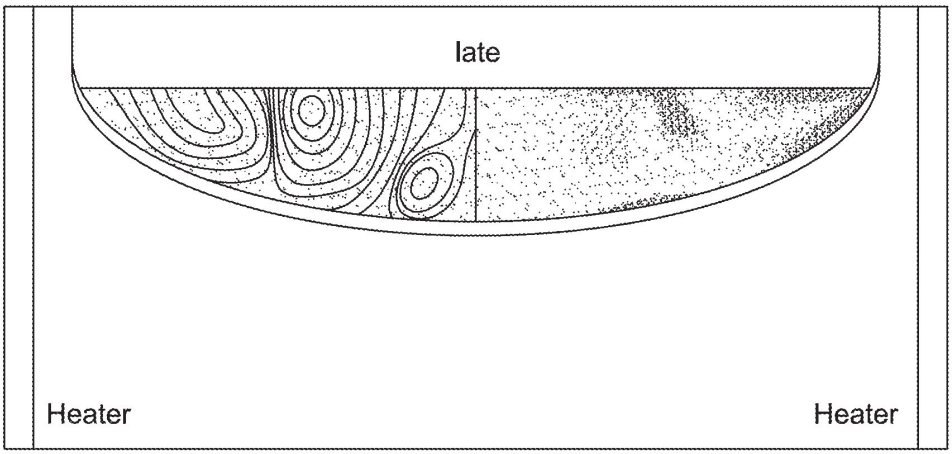

FIG. 1C

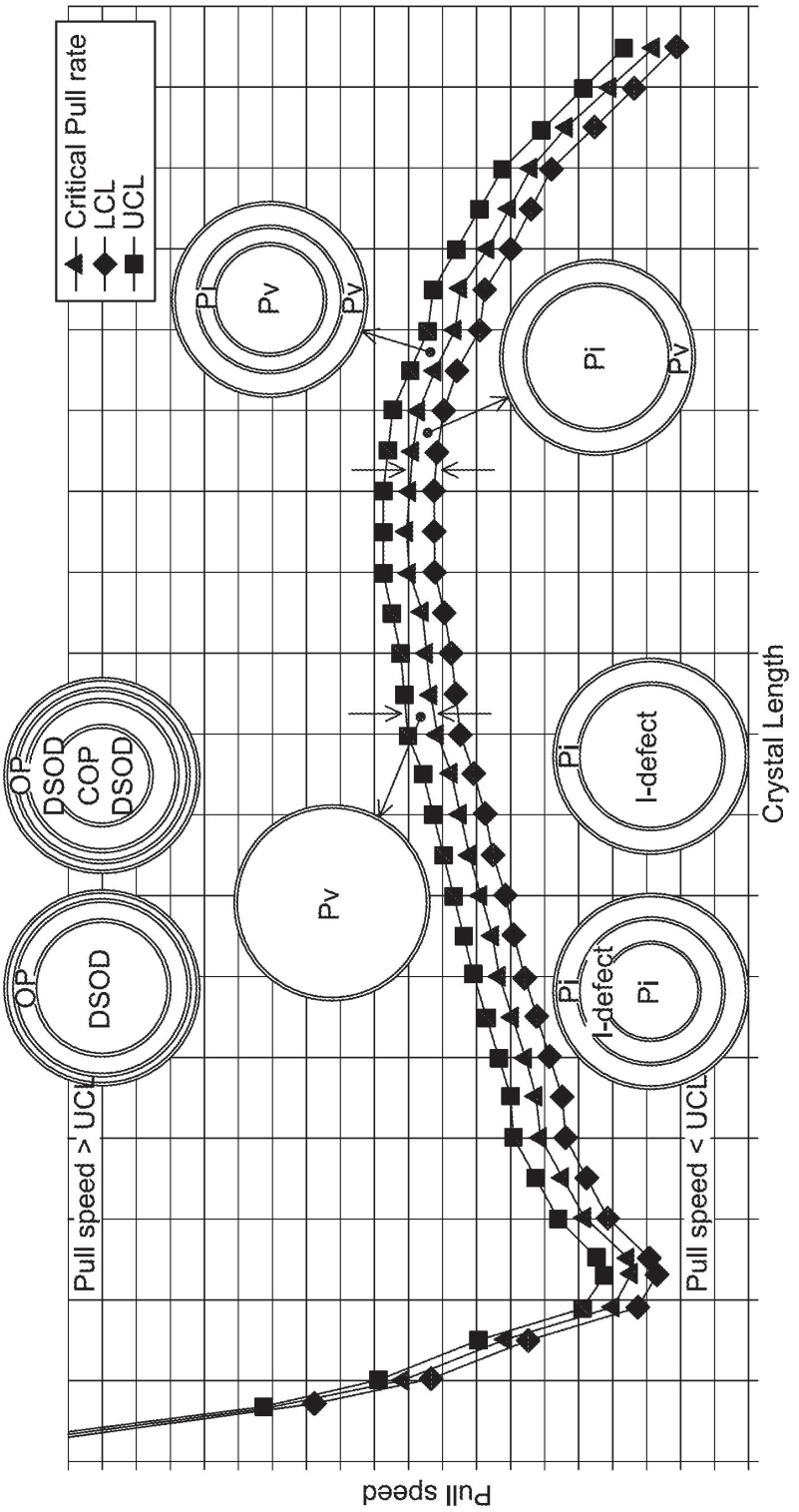
Critical Pull rate
LCL
UCL
Pull speed
Crystal Length
Pull speed > UCL
Pull speed < UCL
OP
DSOD
COP
Pv
Pi
I-defect

FIG. 2A

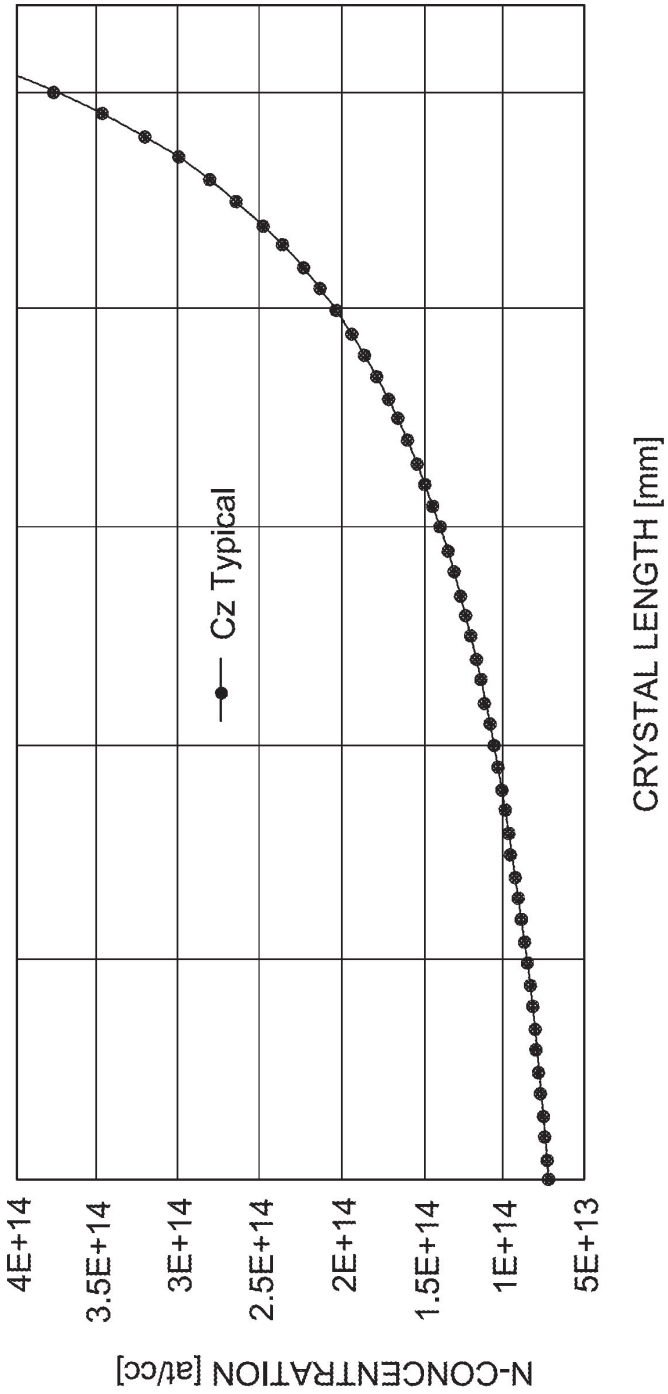
4E+14
3.5E+14
3E+14
2.5E+14
2E+14
1.5E+14
1E+14
5E+13
N-CONCENTRATION [at/cc]
Cz Typical
CRYSTAL LENGTH [mm]

FIG. 2B

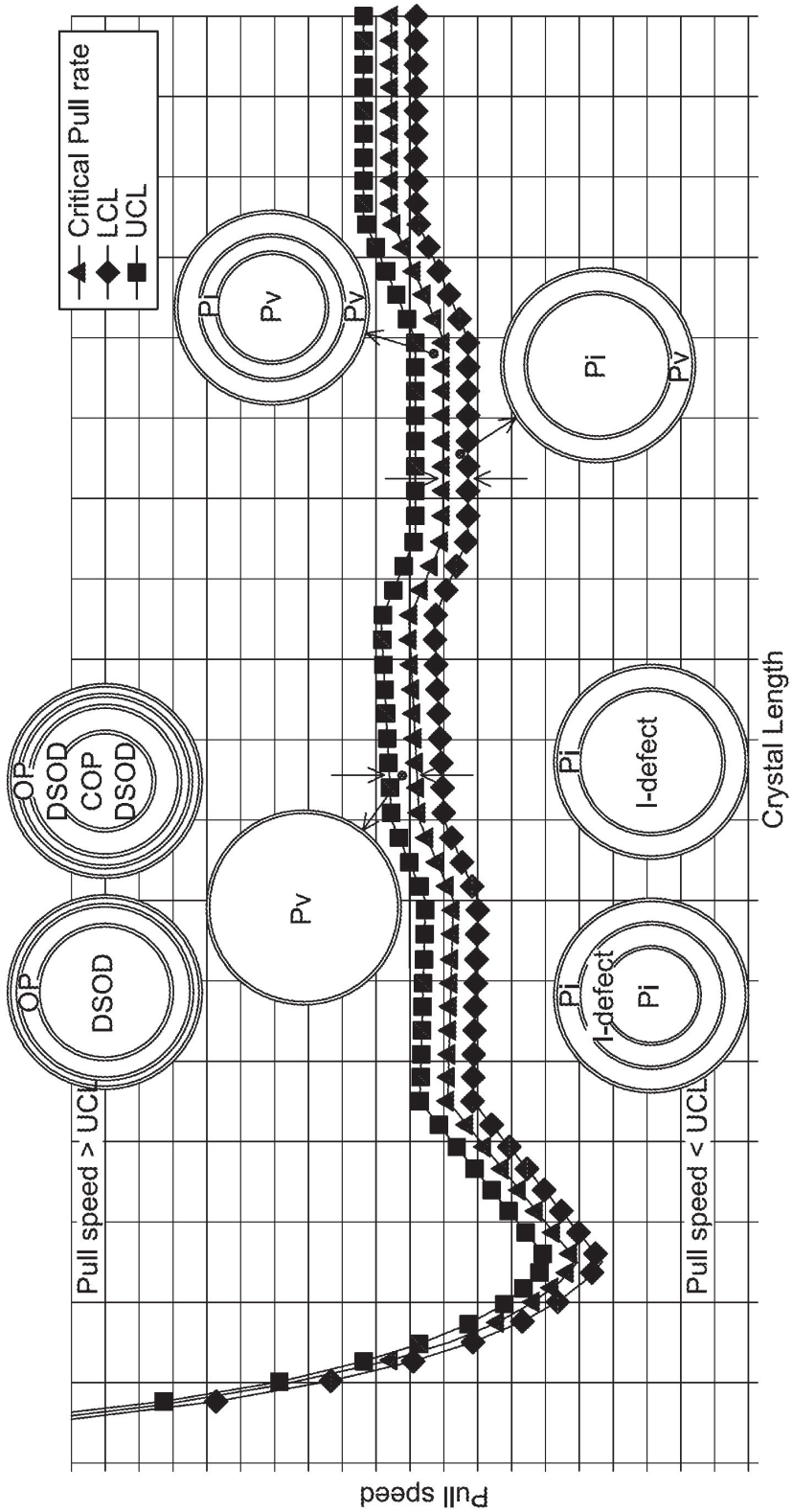
Critical Pull rate
LCL
UCL
Pull speed
Crystal Length
Pull speed > UCL
Pull speed < UCL
OP
DSOD
COP
DSOD
Pv
Pi
I-defect

FIG. 3

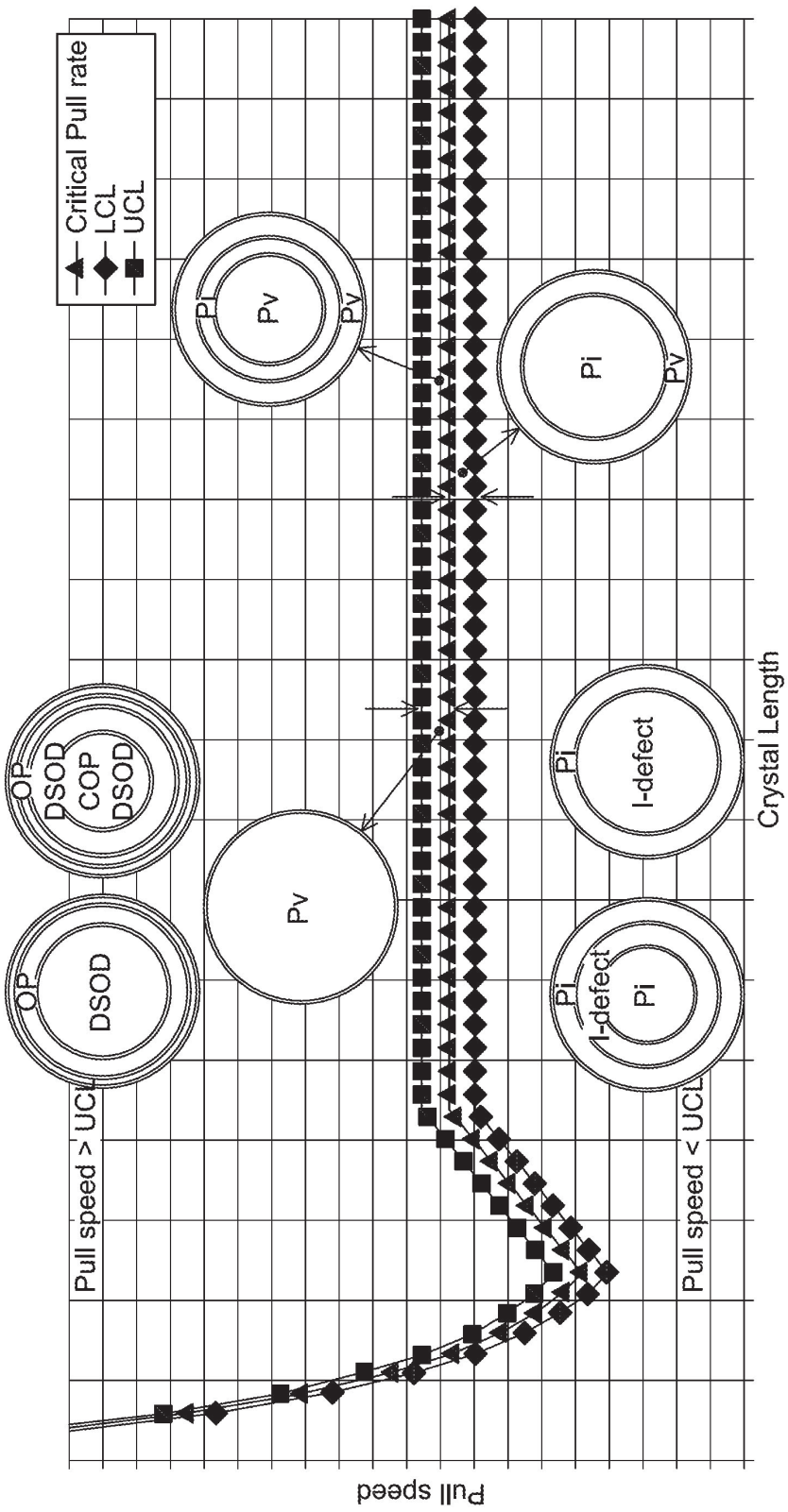
Critical Pull rate
LCL
UCL
Pull speed
Crystal Length
Pull speed > UCL
Pull speed < UCL
OP
DSOD
COP
DSOD
Pv
OP
DSOD
Pv
Pv
Pi
Pv
Pi
I-defect
Pi
Pi
I-defect
Pi

FIG. 4A

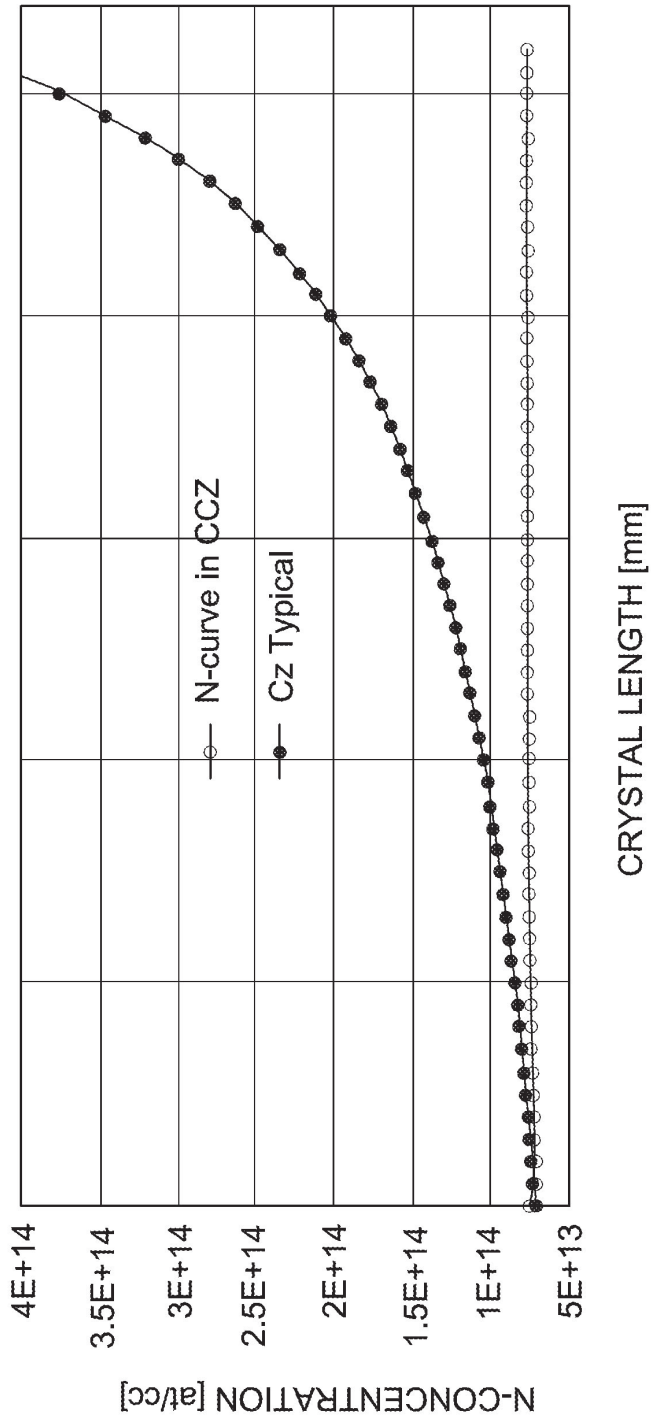
4E+14
3.5E+14
3E+14
2.5E+14
2E+14
1.5E+14
1E+14
5E+13
N-CONCENTRATION [at/cc]
N-curve in CCZ
Cz Typical
CRYSTAL LENGTH [mm]

FIG. 4B

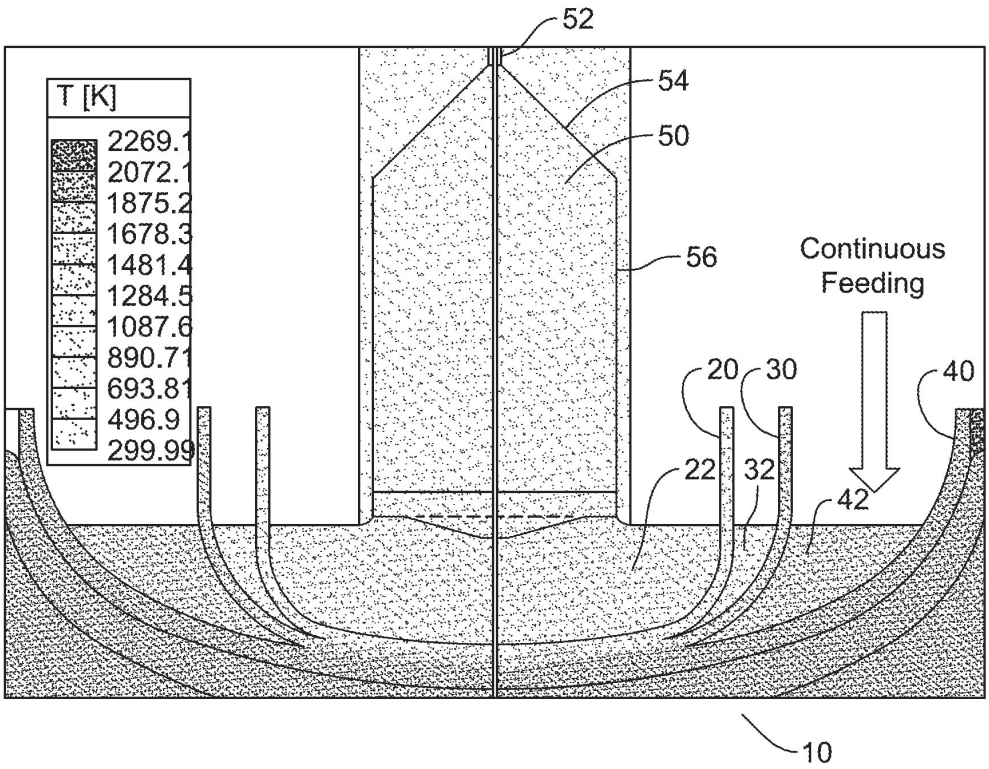
52
54
50
56
Continuous
Feeding
20
30
40
22
32
42
T [K]
2269.1
2072.1
1875.2
1678.3
1481.4
1284.5
1087.6
890.71
693.81
496.9
299.99
10

FIG. 5

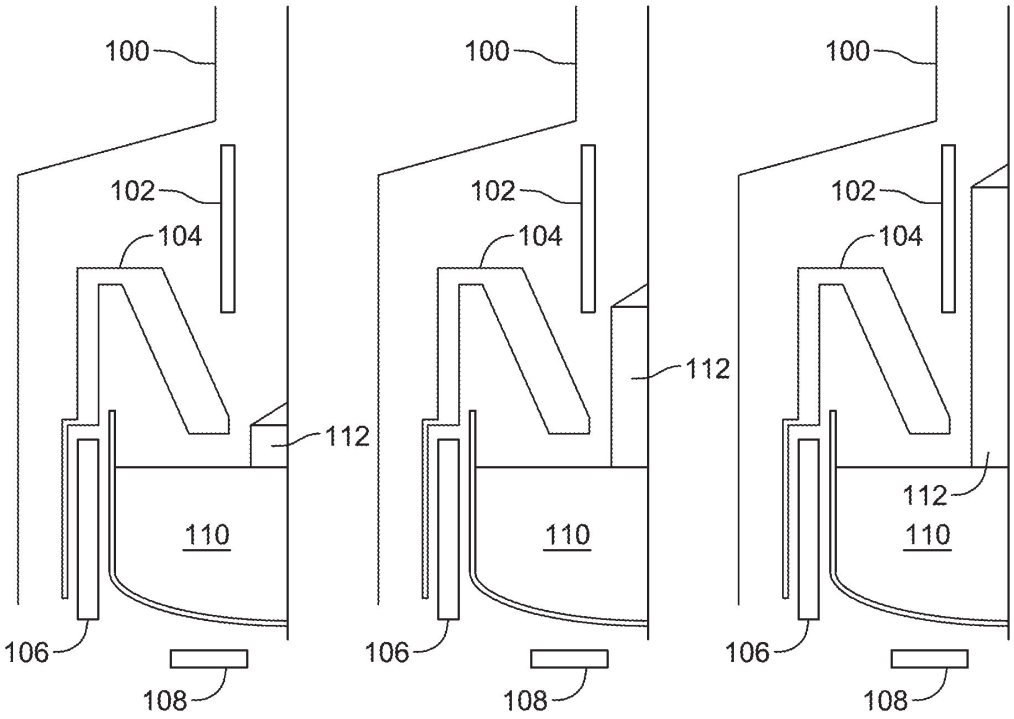

FIG. 6A FIG. 6B FIG. 6C

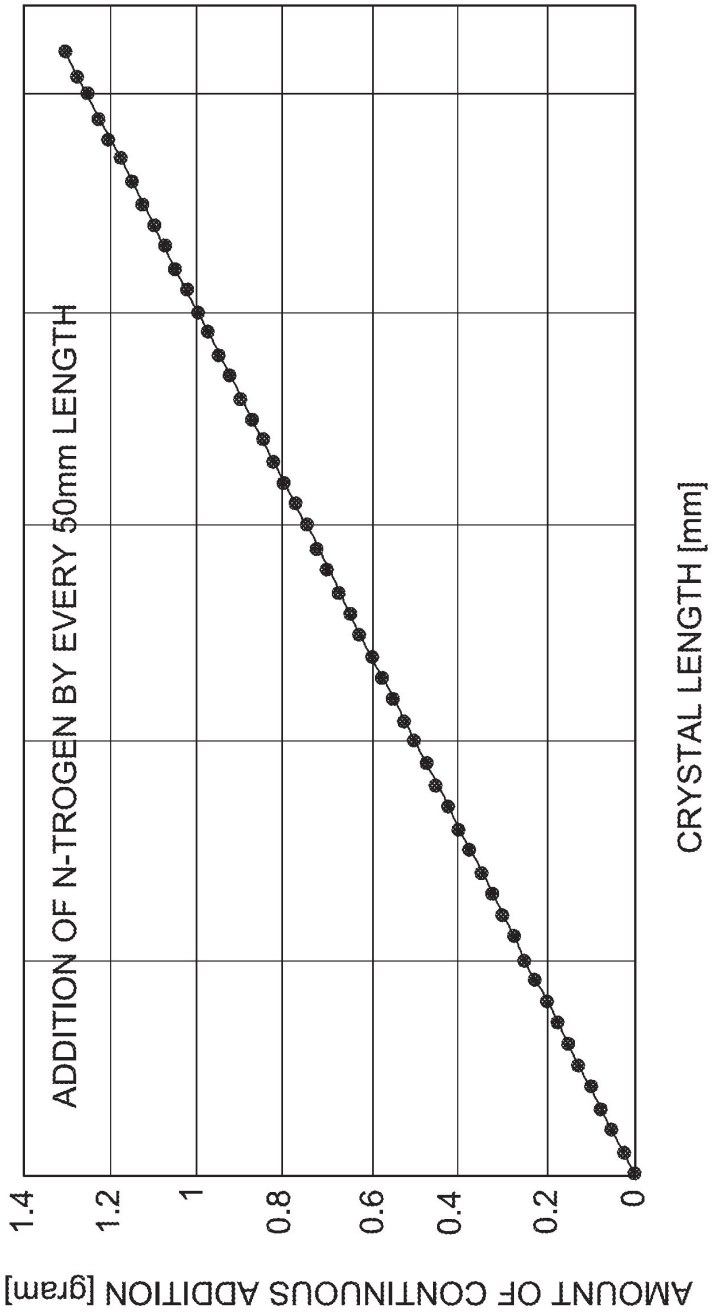
ADDITION OF N-TROGEN BY EVERY 50mm LENGTH
AMOUNT OF CONTINUOUS ADDITION [gram]
1.4
1.2
1
0.8
0.6
0.4
0.2
0
CRYSTAL LENGTH [mm]

FIG. 7

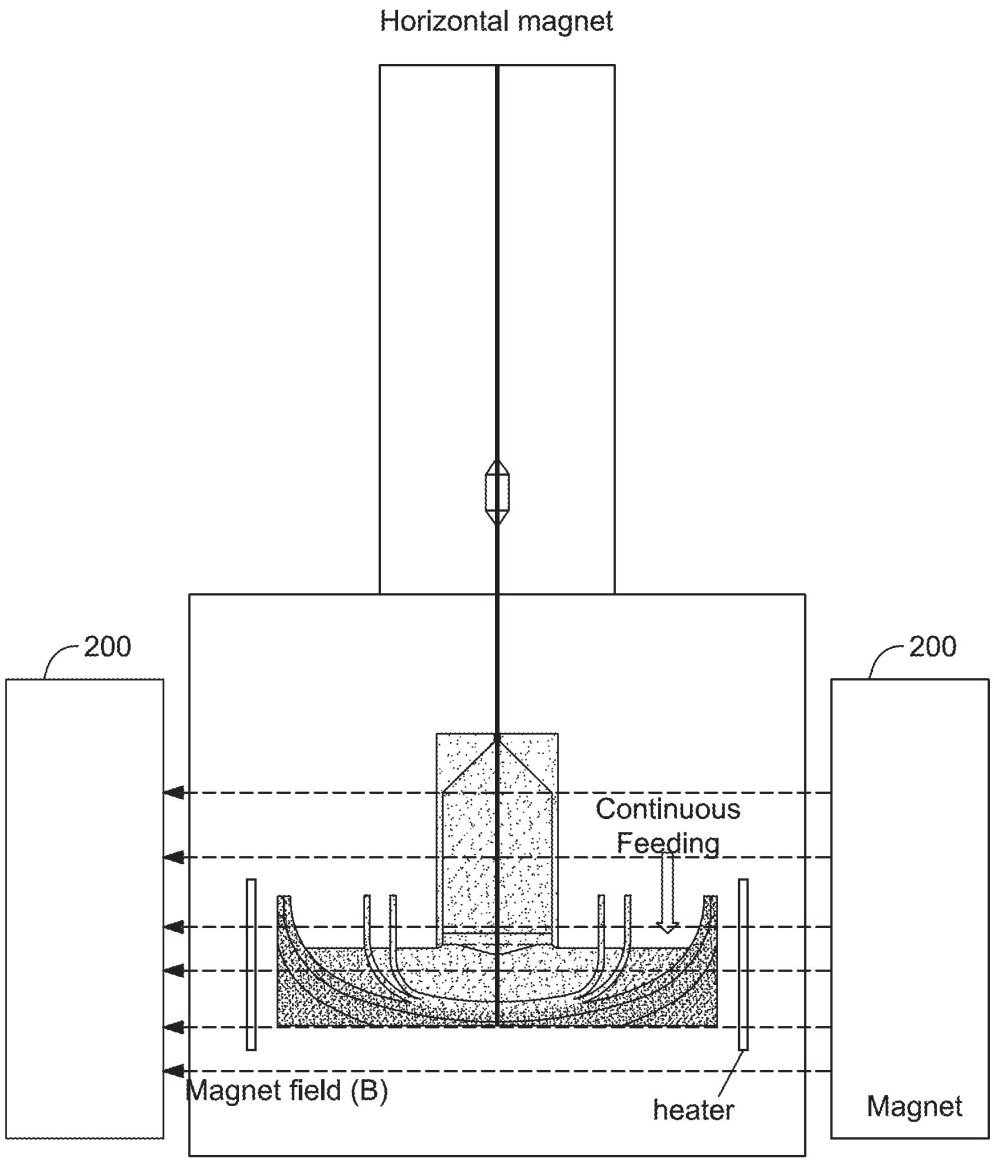
Horizontal magnet
200
200
Continuous
Feeding
Magnet field (B)
heater
Magnet

FIG. 8A

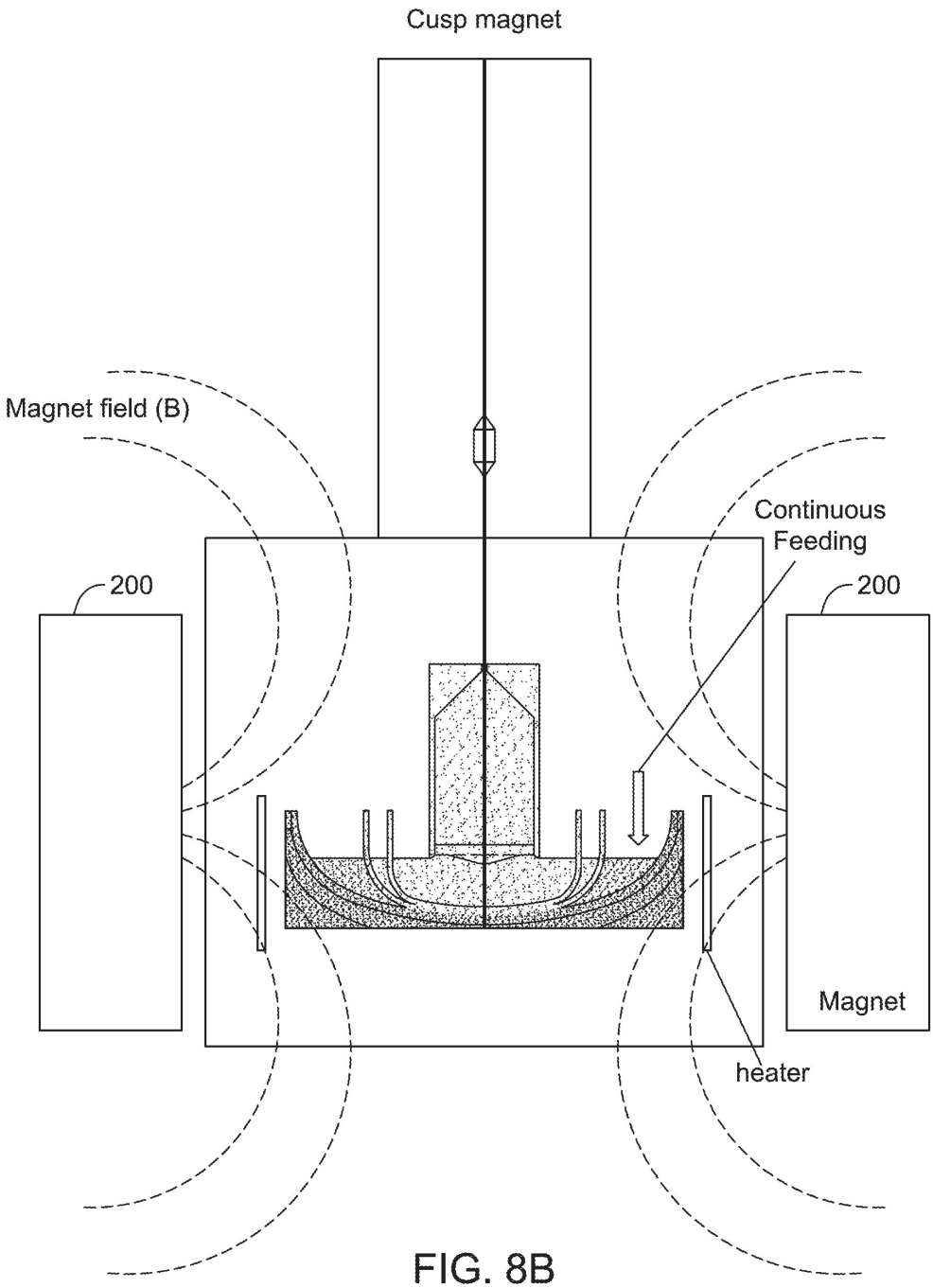
Cusp magnet
Magnet field (B)
Continuous
Feeding
200
200
Magnet
heater

FIG. 8B