BEFORE OVERMOLD

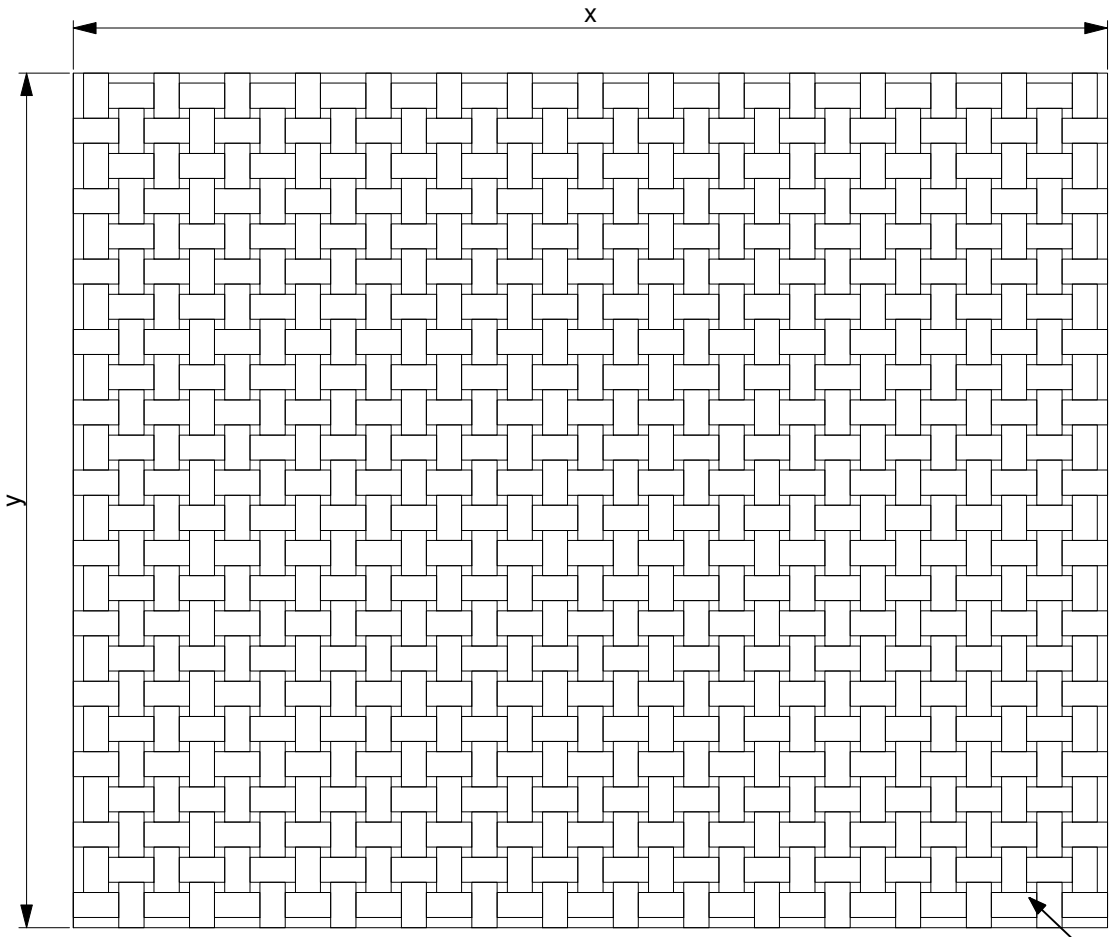

FIGURE 1

AFTER OVERMOLD

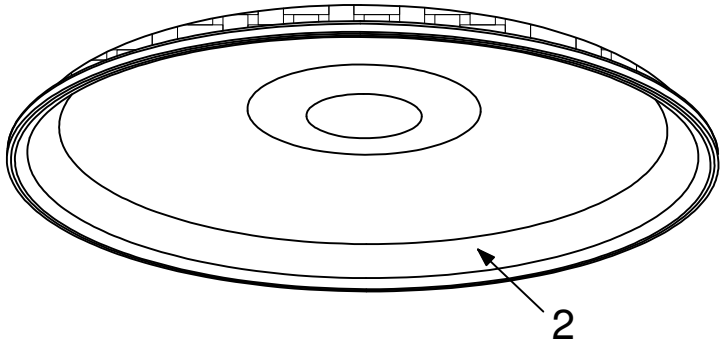

FIGURE 2A

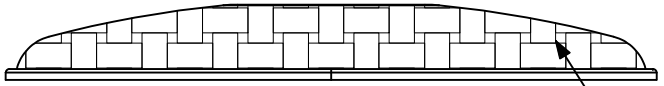

FIGURE 2B

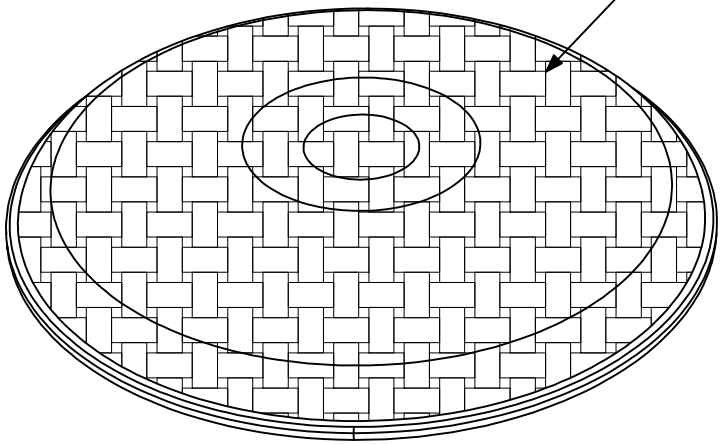

FIGURE 2C

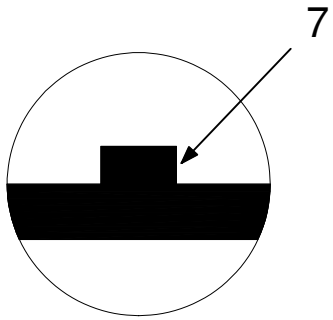

DETAILED VIEW A

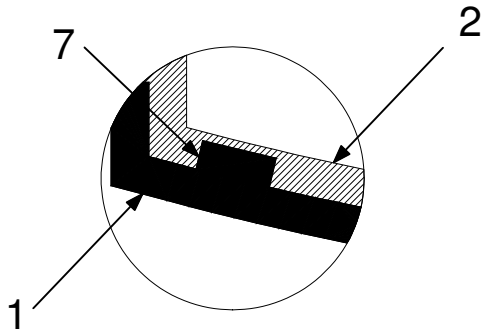

DETAILED VIEW B

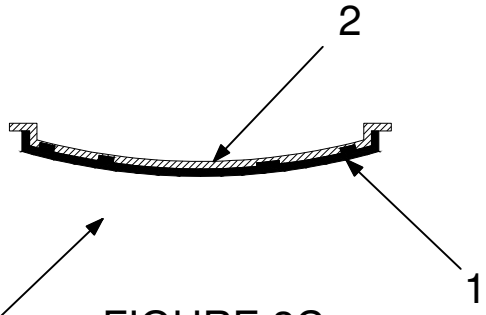

FIGURE 3C

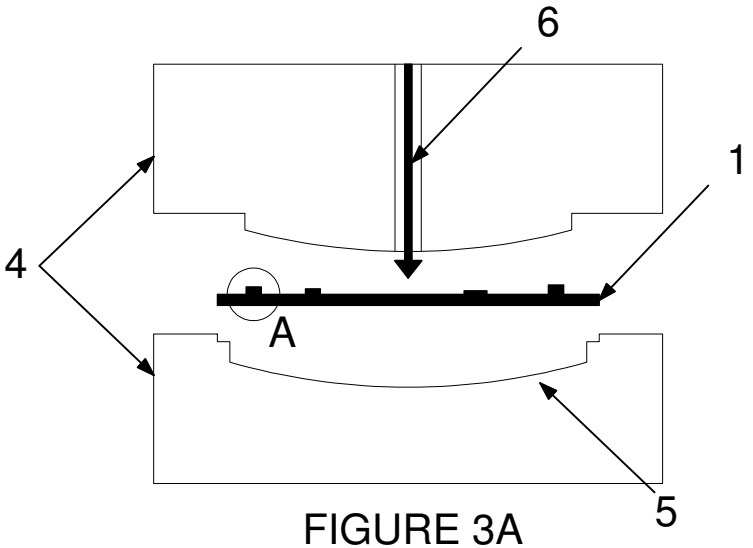

FIGURE 3A

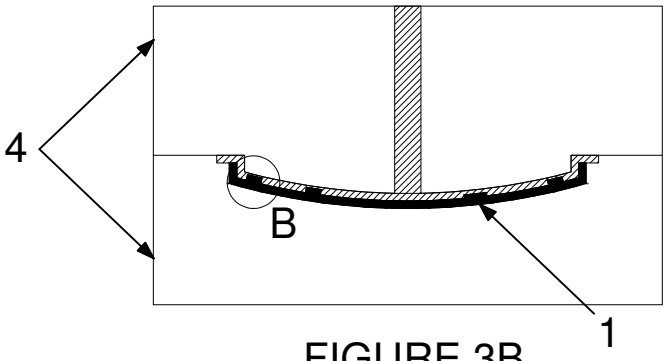

FIGURE 3B