(12) INTERNATIONAL APPLICATION PUBLISHED UNDER THE PATENT COOPERATION TREATY (PCT)

(19) World Intellectual Property Organization
International Bureau

(43) International Publication Date
21 March 2002 (21.03.2002)

PCT

(10) International Publication Number
WO 02/23102 A1

(51) International Patent Classification[7]: F25B 41/06

(21) International Application Number: PCT/US01/28950

(22) International Filing Date:
14 September 2001 (14.09.2001)

(25) Filing Language: English

(26) Publication Language: English

(30) Priority Data:
09/661,477 14 September 2000 (14.09.2000) US
09/809,798 16 March 2001 (16.03.2001) US

(71) Applicant: XDX, LLC [US/US]; 3176 N. Kennicott Avenue, Arlington Heights, IL 60004 (US).

(72) Inventor: WIGHTMAN, David, A.; 1004 Walden Lane, Prospect Heights, IL 60070 (US).

(74) Agent: ROZENBLAT, David; Brinks Hofer Gilson & Lione, P.O. Box 10087, Chicago, IL 60610 (US).

(81) Designated States *(national)*: AE, AG, AL, AM, AT, AU, AZ, BA, BB, BG, BR, BY, BZ, CA, CH, CN, CO, CR, CU, CZ, DE, DK, DM, DZ, EC, EE, ES, FI, GB, GD, GE, GH, GM, HR, HU, ID, IL, IN, IS, JP, KE, KG, KP, KR, KZ, LC, LK, LR, LS, LT, LU, LV, MA, MD, MG, MK, MN, MW, MX, MZ, NO, NZ, PH, PL, PT, RO, RU, SD, SE, SG, SI, SK, SL, TJ, TM, TR, TT, TZ, UA, UG, UZ, VN, YU, ZA, ZW.

(84) Designated States *(regional)*: ARIPO patent (GH, GM, KE, LS, MW, MZ, SD, SL, SZ, TZ, UG, ZW), Eurasian patent (AM, AZ, BY, KG, KZ, MD, RU, TJ, TM), European patent (AT, BE, CH, CY, DE, DK, ES, FI, FR, GB, GR, IE, IT, LU, MC, NL, PT, SE, TR), OAPI patent (BF, BJ, CF, CG, CI, CM, GA, GN, GQ, GW, ML, MR, NE, SN, TD, TG).

Published:
— *with international search report*
— *before the expiration of the time limit for amending the claims and to be republished in the event of receipt of amendments*

[Continued on next page]

(54) Title: EXPANSION DEVICE FOR VAPOR COMPRESSION SYSTEM

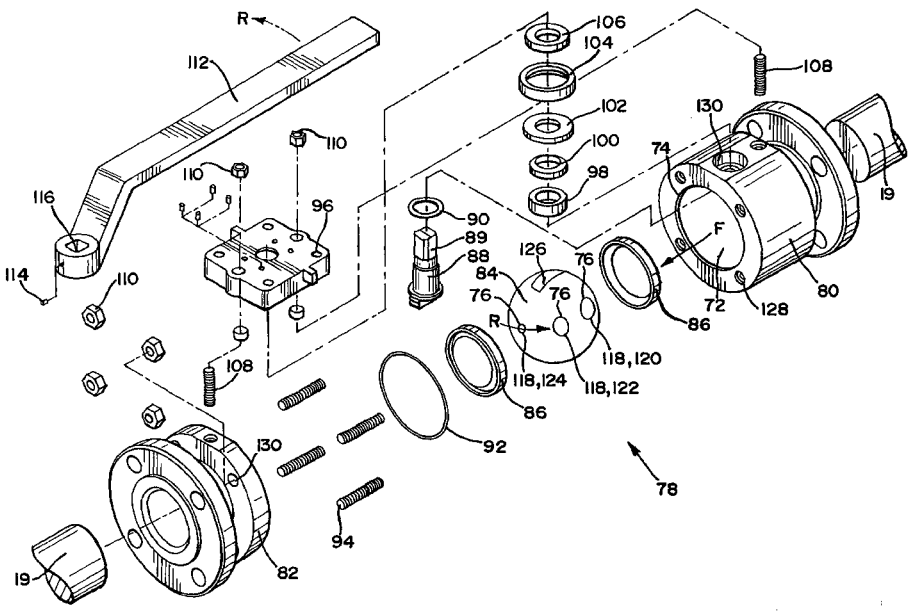

(57) Abstract: A vapor compression system (10) having a line (19) for flowing heat transfer fluid (34), a compressor (12) and a condenser (14) both connected with the line (19). The vapor compression system (10) also has an expansion device (18) connected with the line (19) for expanding the heat transfer fluid (34). The expansion device (18) has a housing (40) defining an orifice (44, 46, 62, 66, 74, 76) with at least two positions, wherein the orifice is effectively made larger in the first position than in the second position. The vapor compression system (10) also has an evaporator (16) connected with the line (19) for transferring heat from ambient surroundings to the heat transfer fluid (34).

WO 02/23102 A1

For two-letter codes and other abbreviations, refer to the "Guidance Notes on Codes and Abbreviations" appearing at the beginning of each regular issue of the PCT Gazette.