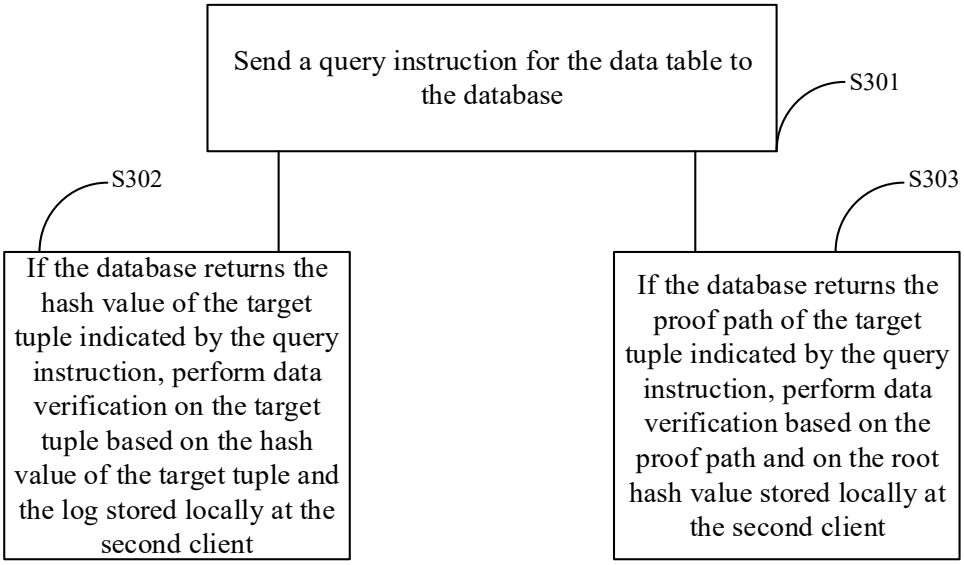
Send a query instruction for the data table to the database
S301
S302
S303
If the database returns the hash value of the target tuple indicated by the query instruction, perform data verification on the target tuple based on the hash value of the target tuple and the log stored locally at the second client
If the database returns the proof path of the target tuple indicated by the query instruction, perform data verification based on the proof path and on the root hash value stored locally at the second client

FIG. 7

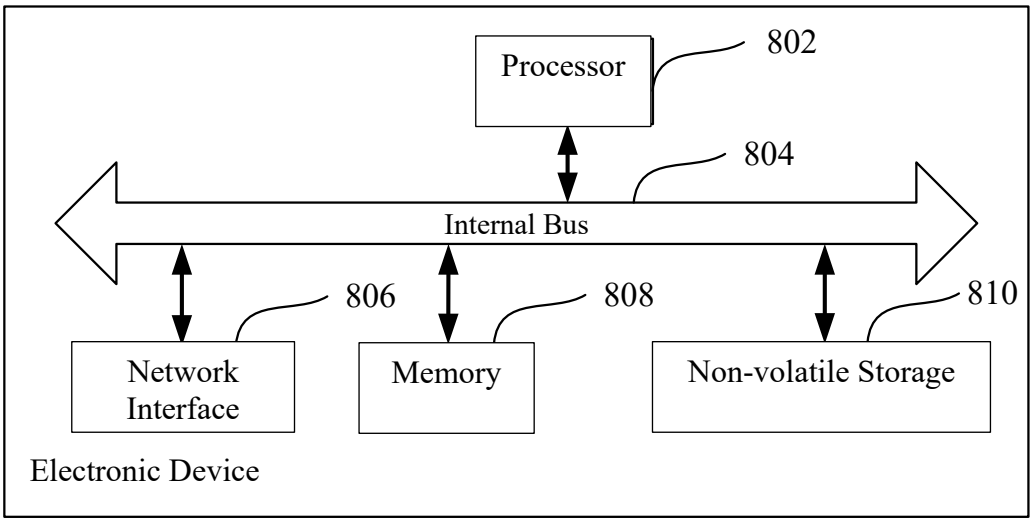
Processor
802
804
Internal Bus
806
808
810
Network Interface
Memory
Non-volatile Storage
Electronic Device

FIG. 8