(12) INTERNATIONAL APPLICATION PUBLISHED UNDER THE PATENT COOPERATION TREATY (PCT)

(19) World Intellectual Property Organization
International Bureau

(43) International Publication Date
17 June 2004 (17.06.2004)

PCT

(10) International Publication Number
WO 2004/051980 A1

(51) International Patent Classification[7]: H04N 3/15, 9/04

(21) International Application Number: PCT/US2003/037466

(22) International Filing Date: 25 November 2003 (25.11.2003)

(25) Filing Language: English

(26) Publication Language: English

(30) Priority Data:
10/305,075 27 November 2002 (27.11.2002) US

(71) Applicant: MICRON TECHNOLOGY, INC. [US/US]; 8000 S. Federal Way, Boise, ID 83707-0006 (US).

(72) Inventor: AGARWAL, Vishnu, K.; 3510 S. Pimmit Pl., Boise, ID 83706 (US).

(74) Agent: D'AMICO, Thomas, J.; Dickstein Shapiro Morin & Oshinsky LLP, 2101 L Street, NW, Washington, DC 20037-1526 (US).

(81) Designated States *(national)*: AE, AG, AL, AM, AT, AU, AZ, BA, BB, BG, BR, BW, BY, BZ, CA, CH, CN, CO, CR, CU, CZ, DE, DK, DM, DZ, EC, EE, EG, ES, FI, GB, GD, GE, GH, GM, HR, HU, ID, IL, IN, IS, JP, KE, KG, KP, KR, KZ, LC, LK, LR, LS, LT, LU, LV, MA, MD, MG, MK, MN, MW, MX, MZ, NI, NO, NZ, OM, PG, PH, PL, PT, RO, RU, SC, SD, SE, SG, SK, SL, SY, TJ, TM, TN, TR, TT, TZ, UA, UG, UZ, VC, VN, YU, ZA, ZM, ZW.

(84) Designated States *(regional)*: ARIPO patent (BW, GH, GM, KE, LS, MW, MZ, SD, SL, SZ, TZ, UG, ZM, ZW), Eurasian patent (AM, AZ, BY, KG, KZ, MD, RU, TJ, TM), European patent (AT, BE, BG, CH, CY, CZ, DE, DK, EE, ES, FI, FR, GB, GR, HU, IE, IT, LU, MC, NL, PT, RO, SE, SI, SK, TR), OAPI patent (BF, BJ, CF, CG, CI, CM, GA, GN, GQ, GW, ML, MR, NE, SN, TD, TG).

Published:
— *with international search report*

For two-letter codes and other abbreviations, refer to the "Guidance Notes on Codes and Abbreviations" appearing at the beginning of each regular issue of the PCT Gazette.

(54) Title: CMOS IMAGER WITH IMPROVED COLOR RESPONSE

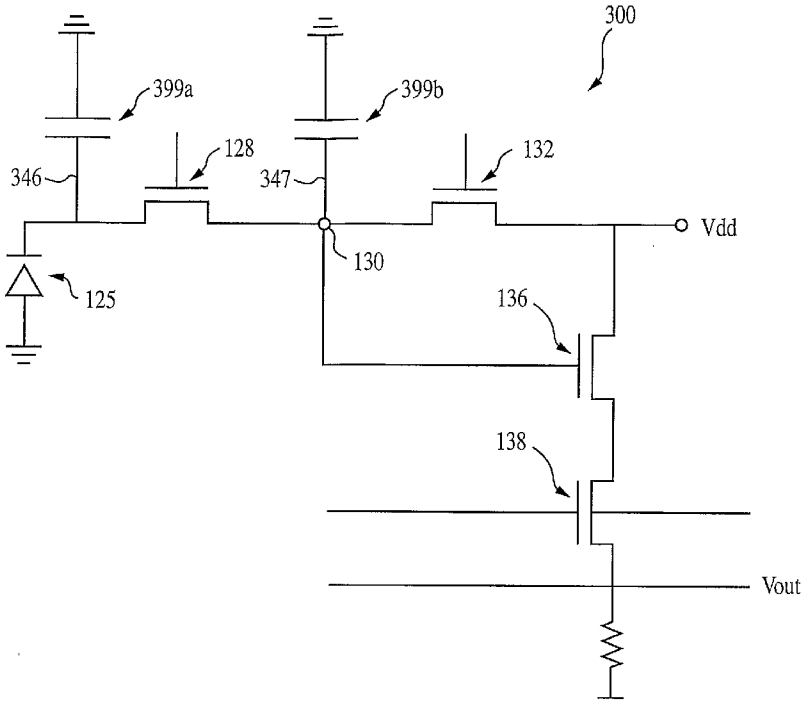

(57) Abstract: CMOS image sensors have charge storage capacitors connected to various light sensitive and/or electrical elements. The capacity of the capacitors used for each pixel is tailored to the color to be detected. Charge storage capacitors may be formed entirely over a field oxide region of the CMOS imager, entirely over an active area of a pixel sensor cell, or partially over a field oxide region and partially over an active pixel area of a pixel sensor cell.

WO 2004/051980 A1