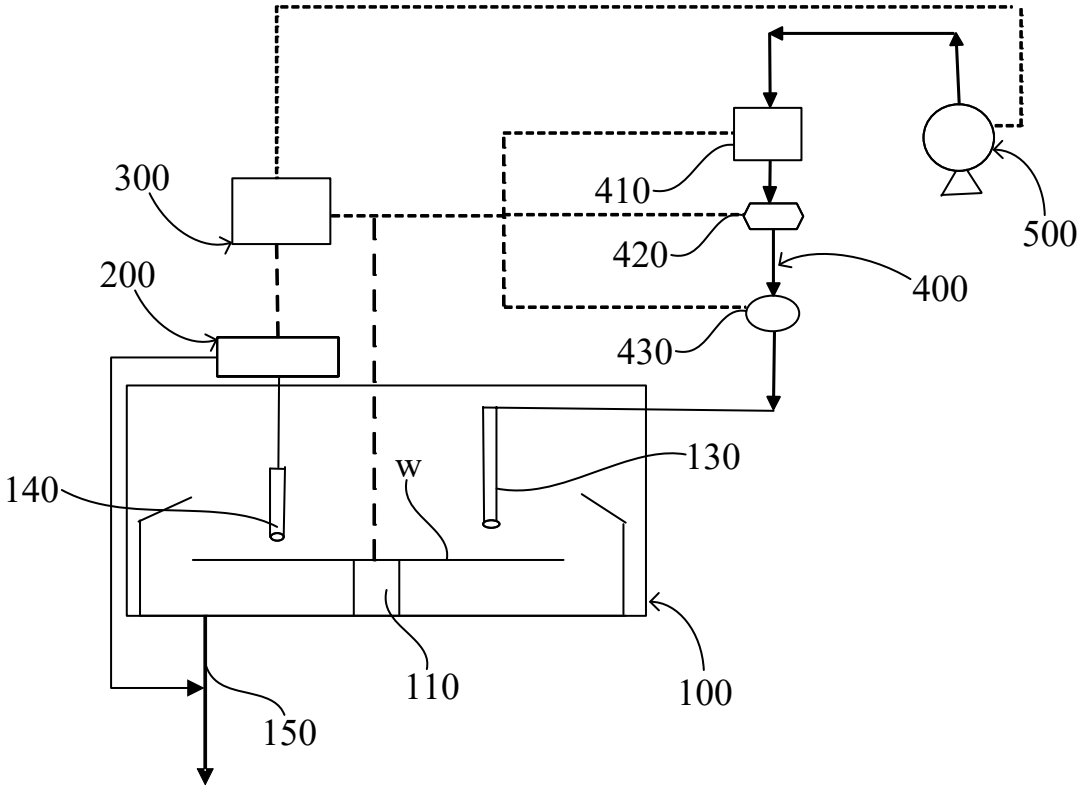

FIG. 1

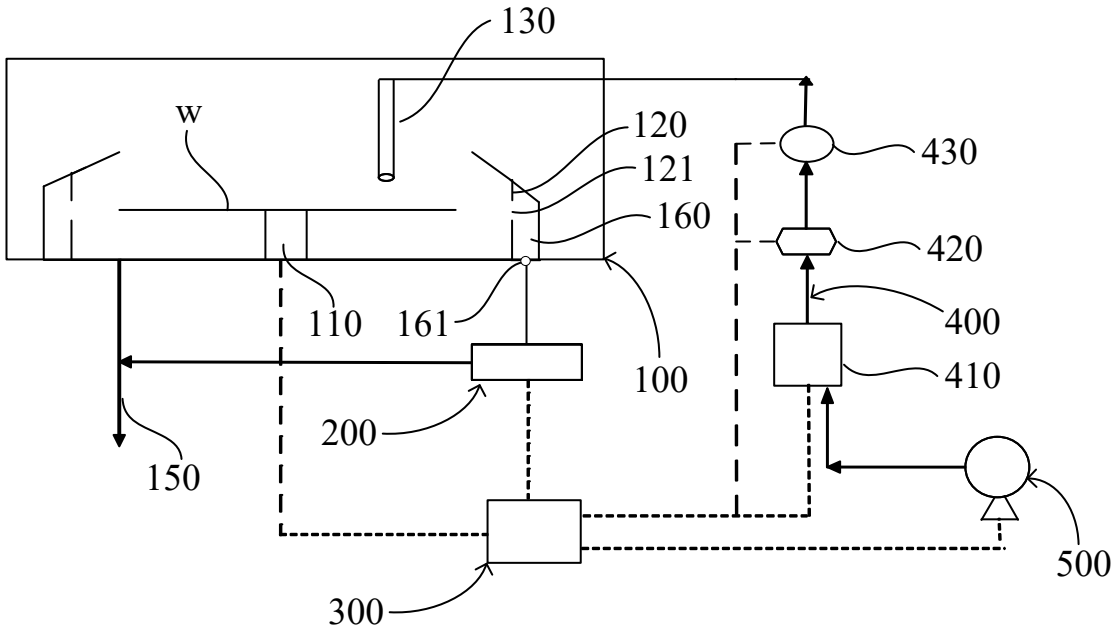

FIG. 2

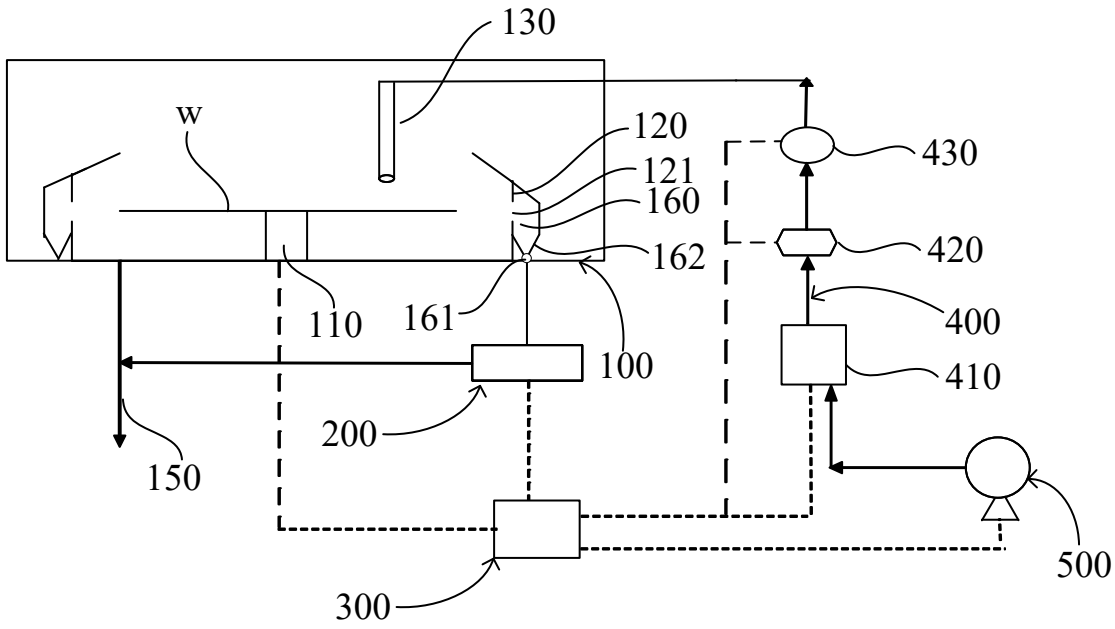

FIG. 3

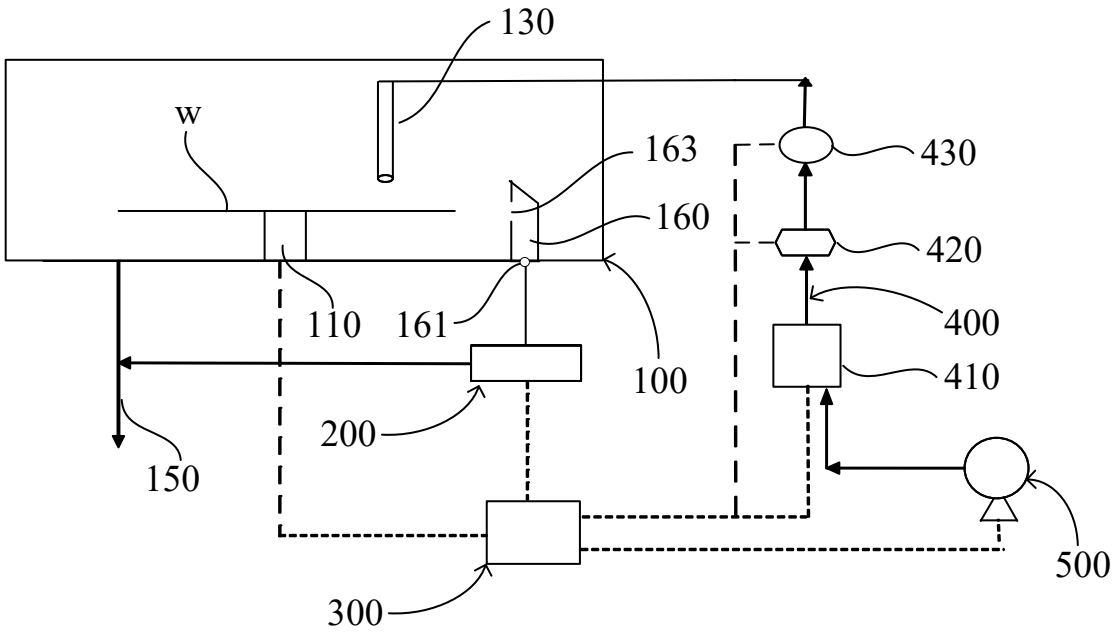

FIG. 4

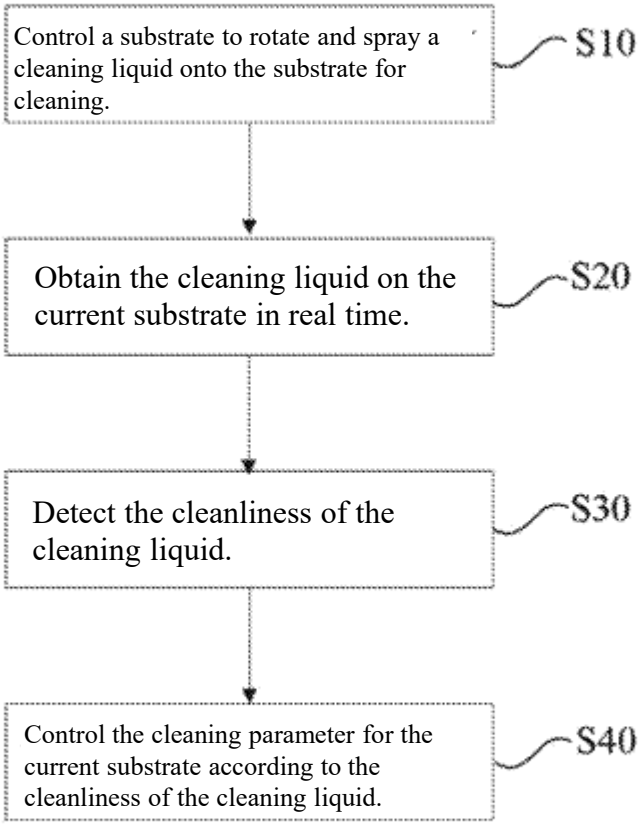
Control a substrate to rotate and spray a cleaning liquid onto the substrate for cleaning.
S10
Obtain the cleaning liquid on the current substrate in real time.
S20
Detect the cleanliness of the cleaning liquid.
S30
Control the cleaning parameter for the current substrate according to the cleanliness of the cleaning liquid.
S40

FIG. 5