(12) INTERNATIONAL APPLICATION PUBLISHED UNDER THE PATENT COOPERATION TREATY (PCT)

(19) World Intellectual Property Organization
International Bureau

(43) International Publication Date
9 November 2006 (09.11.2006)

PCT

(10) International Publication Number
WO 2006/117774 A1

(51) International Patent Classification:
A45B 19/00 (2006.01)

(21) International Application Number:
PCT/IL2005/001296

(22) International Filing Date:
1 December 2005 (01.12.2005)

(25) Filing Language: English

(26) Publication Language: English

(30) Priority Data:
PCT/IL2005/000450 1 May 2005 (01.05.2005) IL
60/722,438 3 October 2005 (03.10.2005) US

(71) Applicant *(for all designated States except US)*: **LASIES INVESTMENTS AND ENTERPRISES LTD.** [IL/IL]; 8 Hartum Street, P.O. Box 18567, Har-Hachotzvim, 97770 Jerusalem (IL).

(72) Inventor; and

(75) Inventor/Applicant *(for US only)*: **AMSEL, Chaim, Simcha** [IL/IL]; 5 Ha'Admor Me'viznitz Street, 97707 Jerusalem (IL).

(74) Agent: **REINHOLD COHN AND PARTNERS**; P.O.B. 4060, 61040 Tel-Aviv (IL).

(81) Designated States *(unless otherwise indicated, for every kind of national protection available)*: AE, AG, AL, AM, AT, AU, AZ, BA, BB, BG, BR, BW, BY, BZ, CA, CH, CN, CO, CR, CU, CZ, DE, DK, DM, DZ, EC, EE, EG, ES, FI, GB, GD, GE, GH, GM, HR, HU, ID, IL, IN, IS, JP, KE, KG, KM, KN, KP, KR, KZ, LC, LK, LR, LS, LT, LU, LV, LY, MA, MD, MG, MK, MN, MW, MX, MZ, NA, NG, NI, NO, NZ, OM, PG, PH, PL, PT, RO, RU, SC, SD, SE, SG, SK, SL, SM, SY, TJ, TM, TN, TR, TT, TZ, UA, UG, US, UZ, VC, VN, YU, ZA, ZM, ZW.

(84) Designated States *(unless otherwise indicated, for every kind of regional protection available)*: ARIPO (BW, GH, GM, KE, LS, MW, MZ, NA, SD, SL, SZ, TZ, UG, ZM, ZW), Eurasian (AM, AZ, BY, KG, KZ, MD, RU, TJ, TM), European (AT, BE, BG, CH, CY, CZ, DE, DK, EE, ES, FI, FR, GB, GR, HU, IE, IS, IT, LT, LU, LV, MC, NL, PL, PT, RO, SE, SI, SK, TR), OAPI (BF, BJ, CF, CG, CI, CM, GA, GN, GQ, GW, ML, MR, NE, SN, TD, TG).

Published:
— *with international search report*

For two-letter codes and other abbreviations, refer to the "Guidance Notes on Codes and Abbreviations" appearing at the beginning of each regular issue of the PCT Gazette.

(54) **Title:** IMPROVEMENTS RELATING TO STRUTLESS-TYPE UMBRELLA

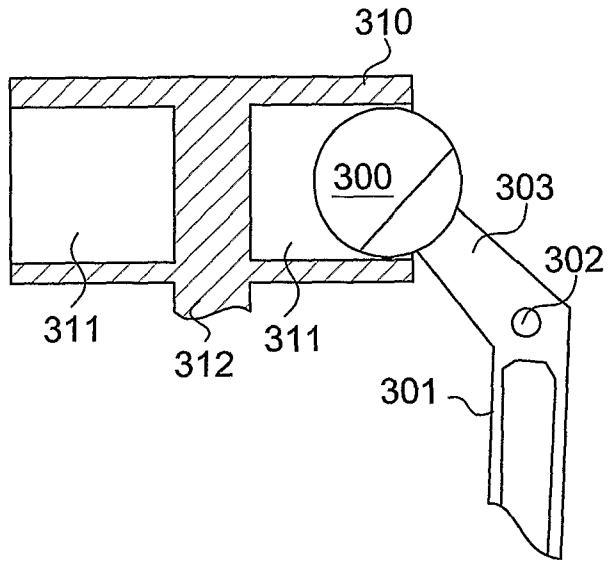

(57) **Abstract:** Umbrella rib assembly is presented for use in strutless umbrella having a pin (300) and slide canopy conducting mechanism (310). The rib assembly comprises a longitudinal rib body (301) having a pivot member (302) at its end, and a rib lever (303) extending from the rib body (301), and being characterized in that the pivot member and the rib body (301) together with the rib lever (303) present a single piece of material, and the pivot member (302) is located in a corner formed between the rib body (301) and the rib lever (303).

WO 2006/117774 A1