FIGURE 1

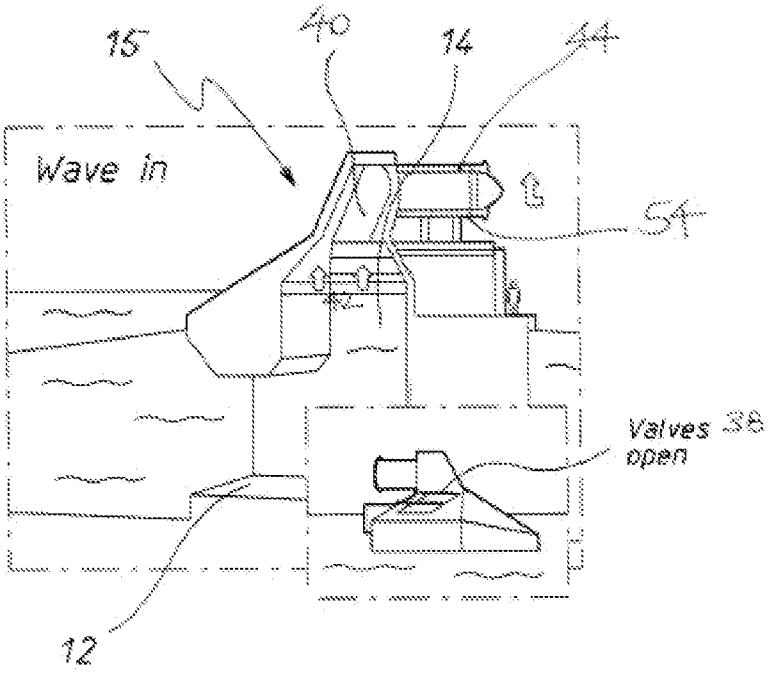

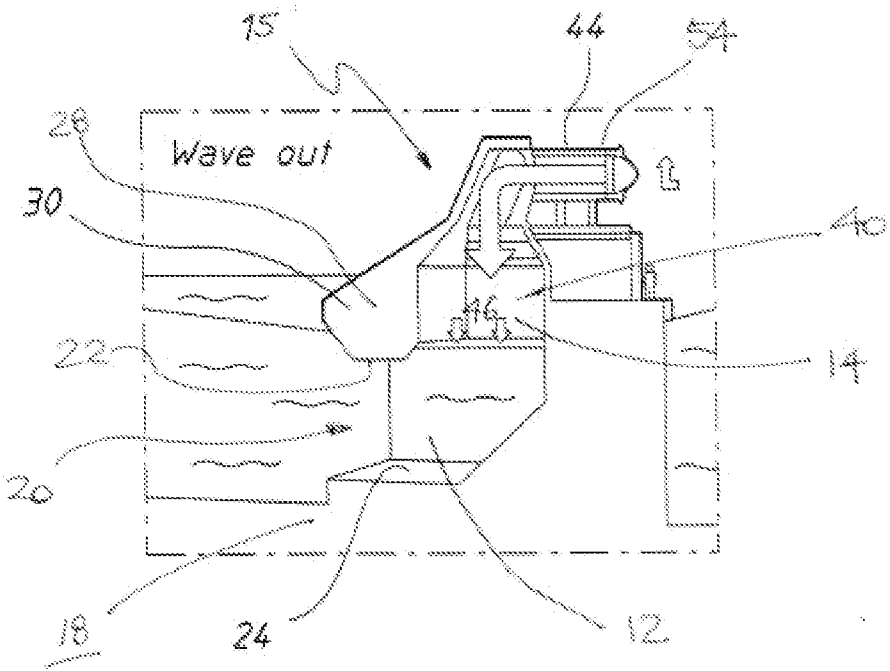

FIGURE 2

FIGURE 3

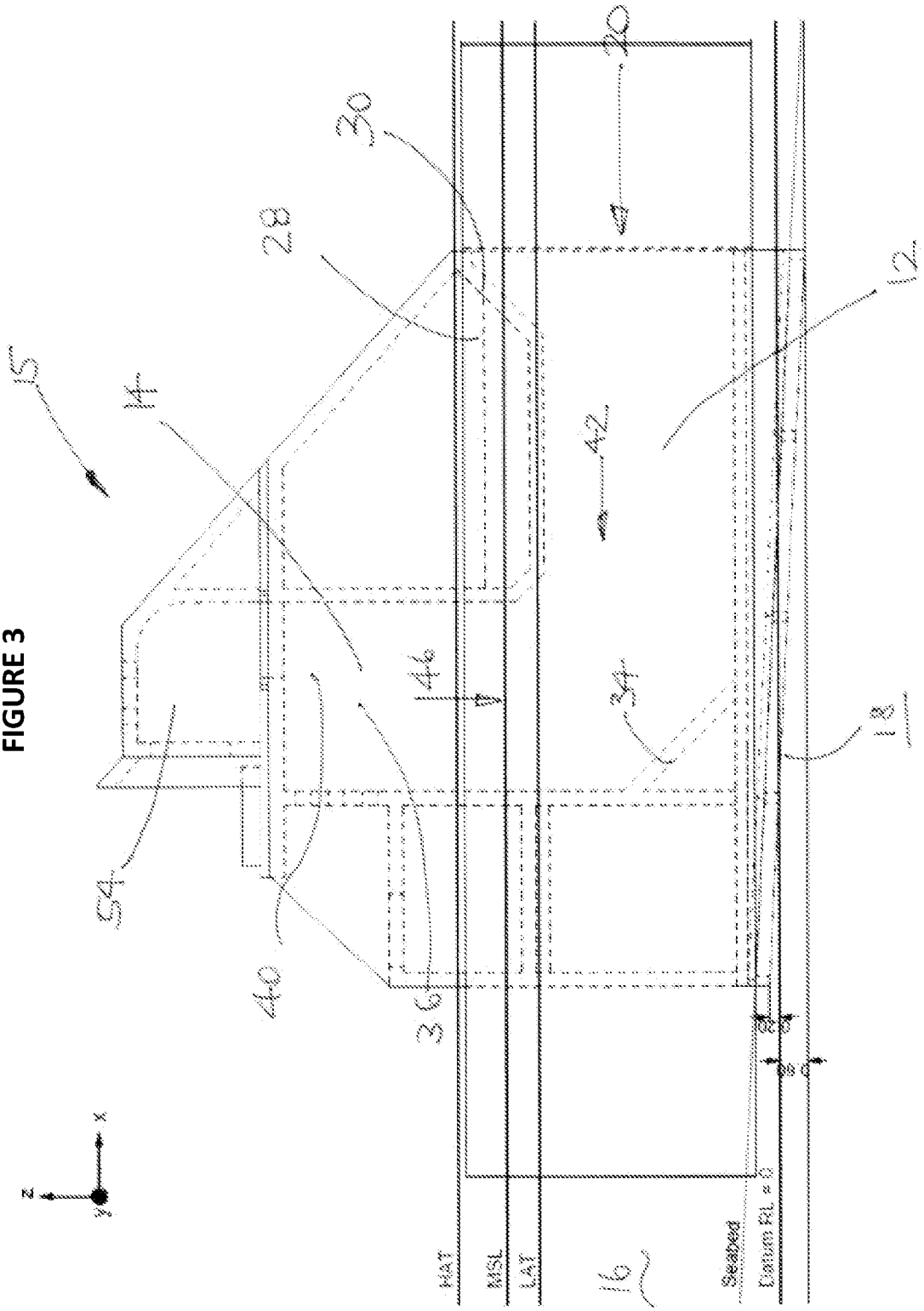
5
14
28
30
10
12
42
144
34
18
54
40
36
16
HAT
MSL
LAT
Seabed
Datum RL = 0
x
z
y

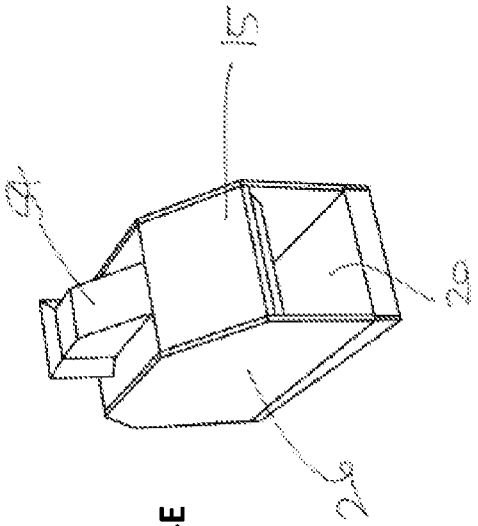

FIGURE 4E

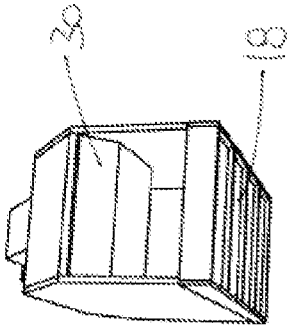

FIGURE 4D

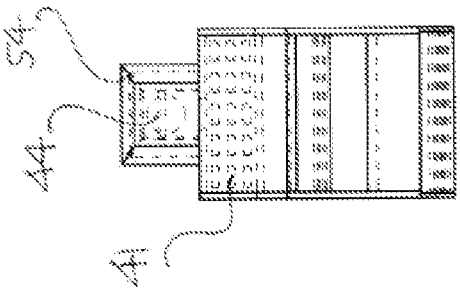

FIGURE 4C

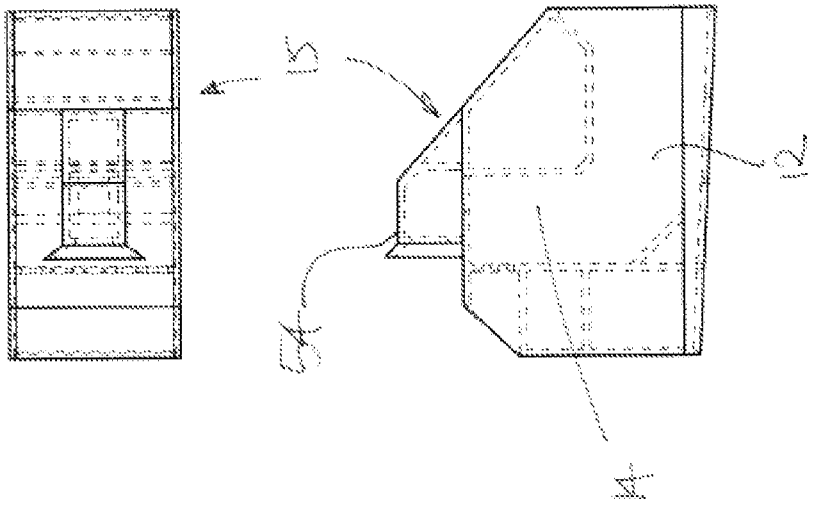

FIGURE 4B

FIGURE 4A

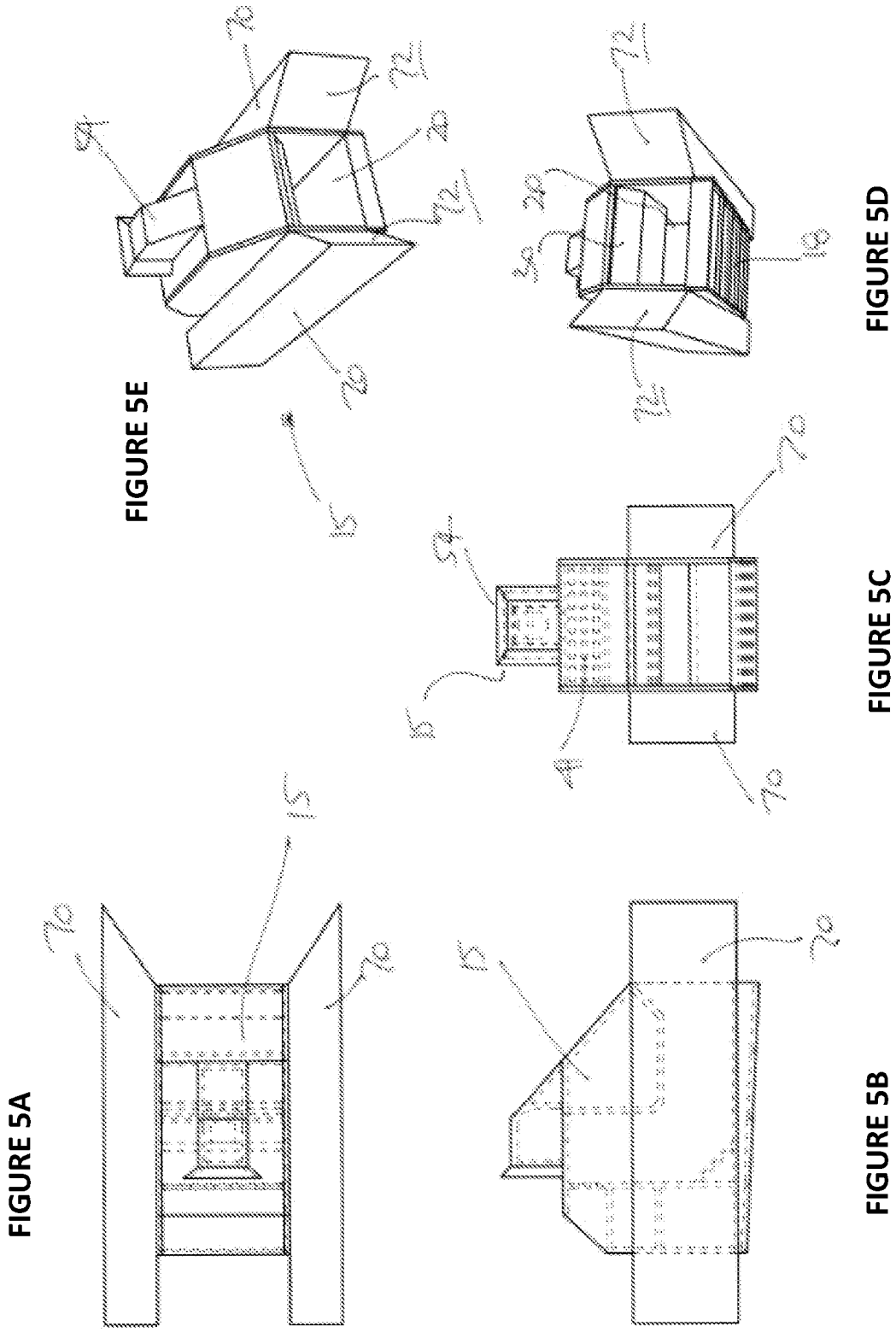
FIGURE 5A
FIGURE 5B
FIGURE 5C
FIGURE 5D
FIGURE 5E

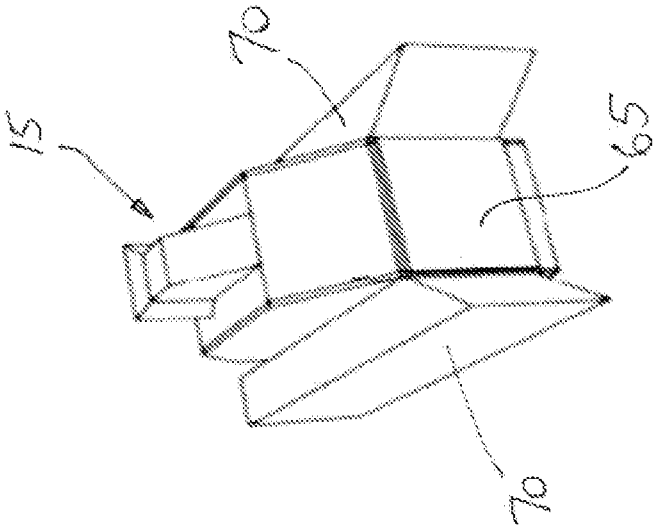

FIGURE 5G

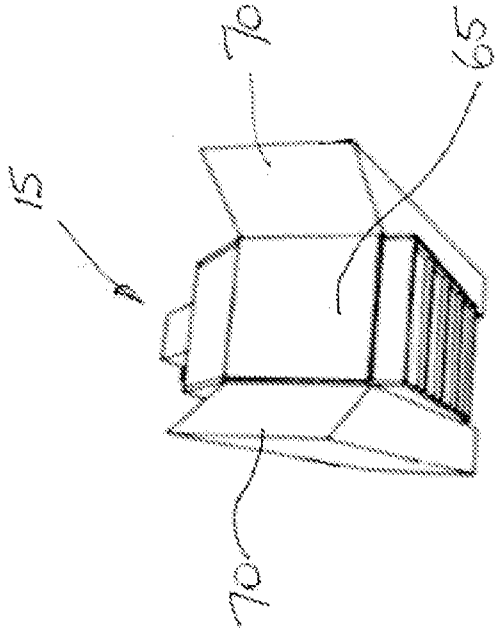

FIGURE 5F

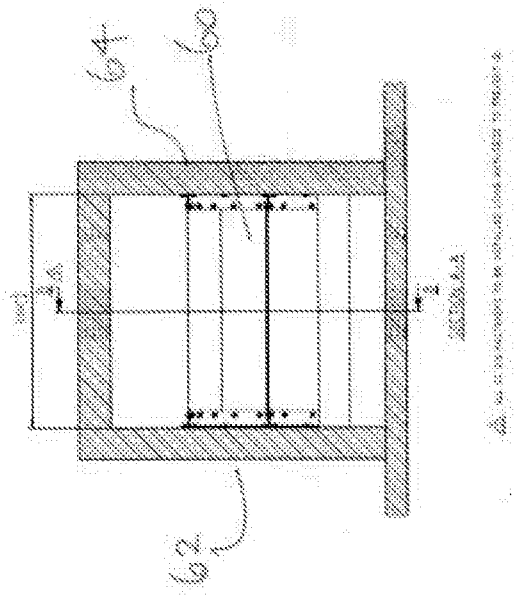

FIGURE 6B

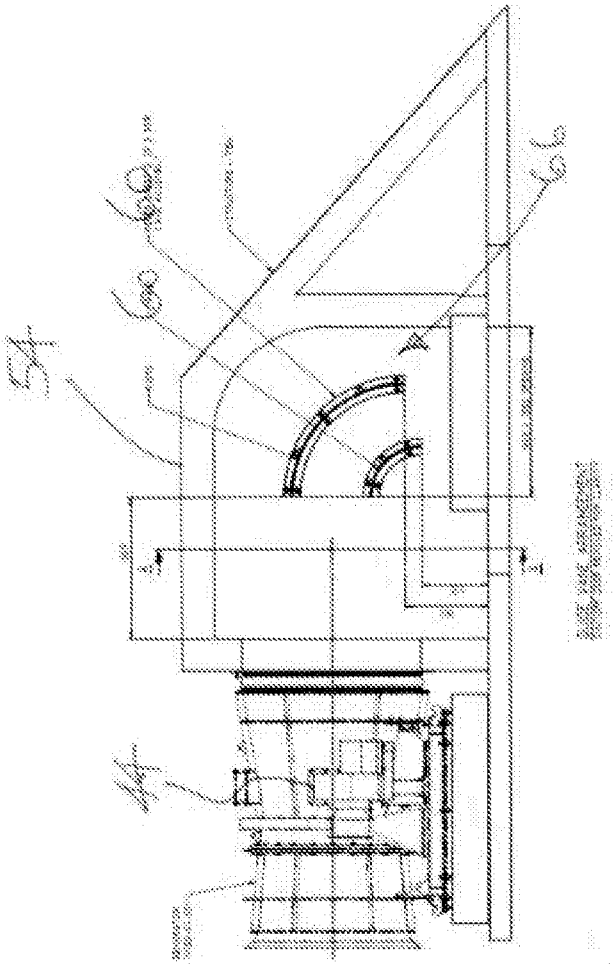

FIGURE 6A

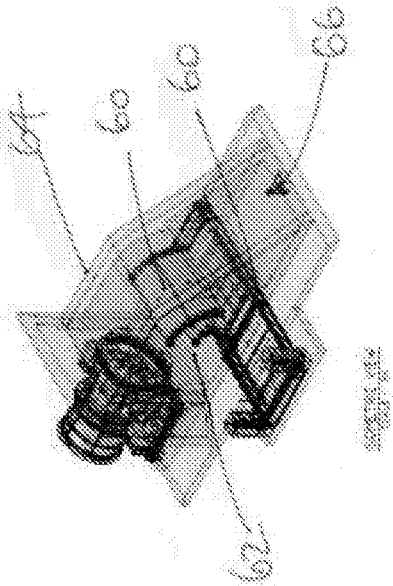

FIGURE 6C

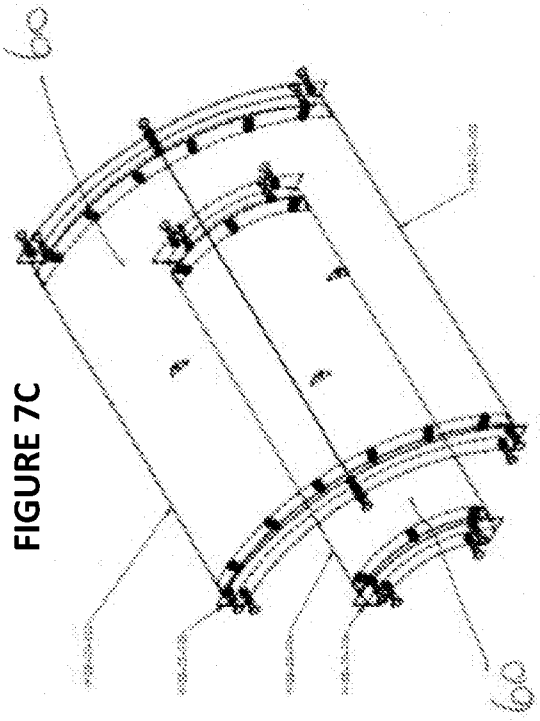

FIGURE 7C

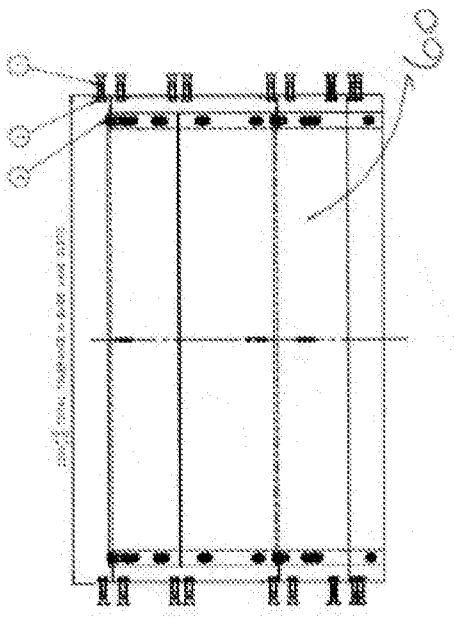

FIGURE 7D

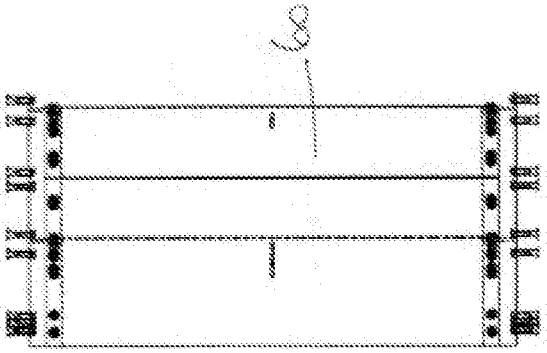

FIGURE 7A

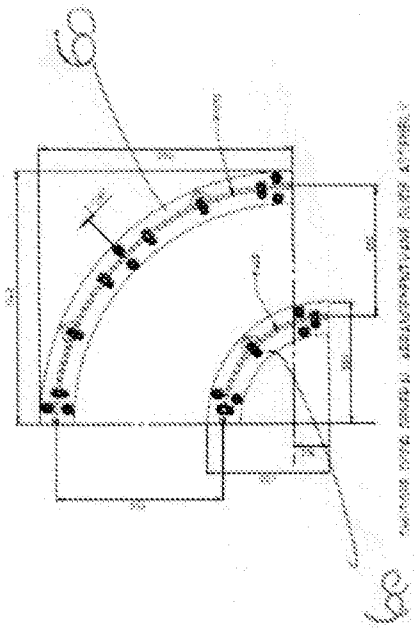

FIGURE 7B

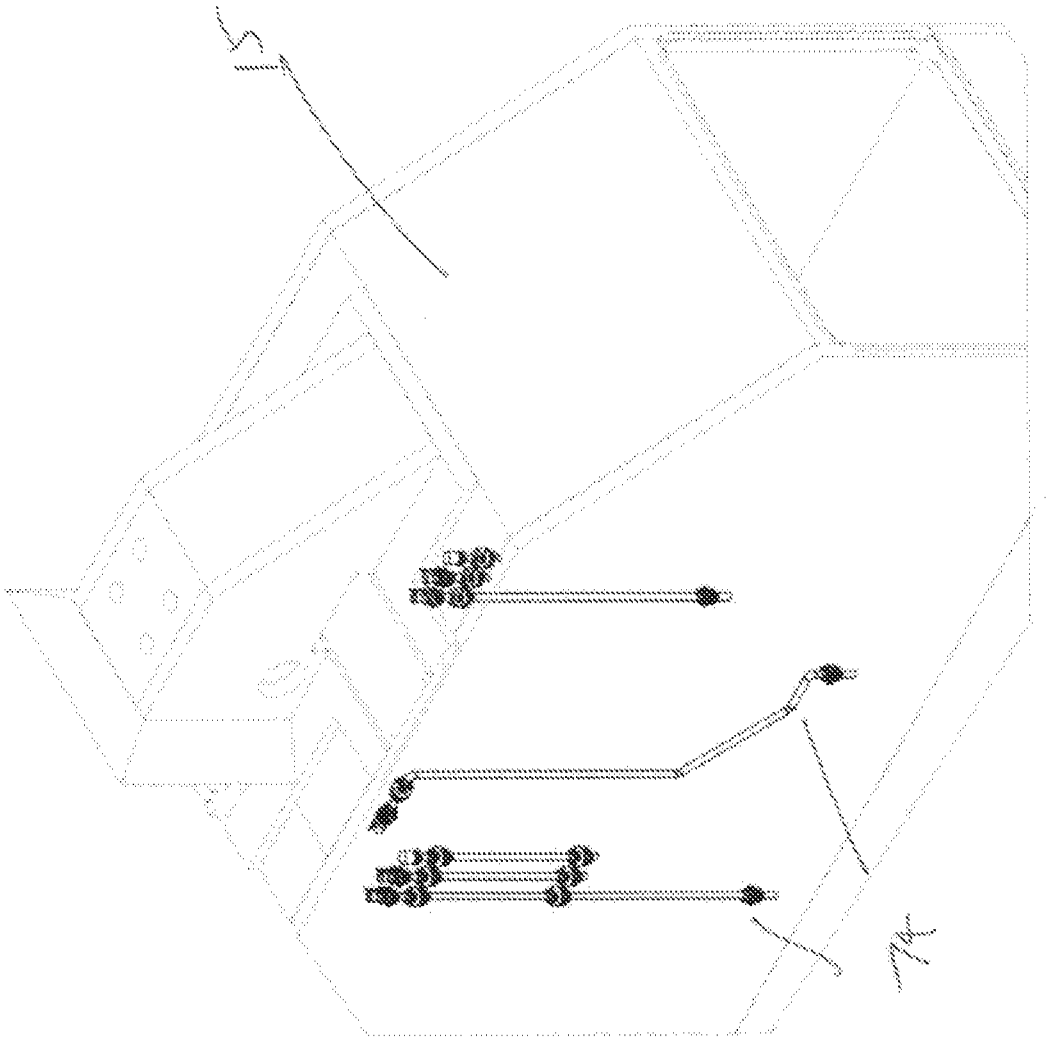

FIGURE 8

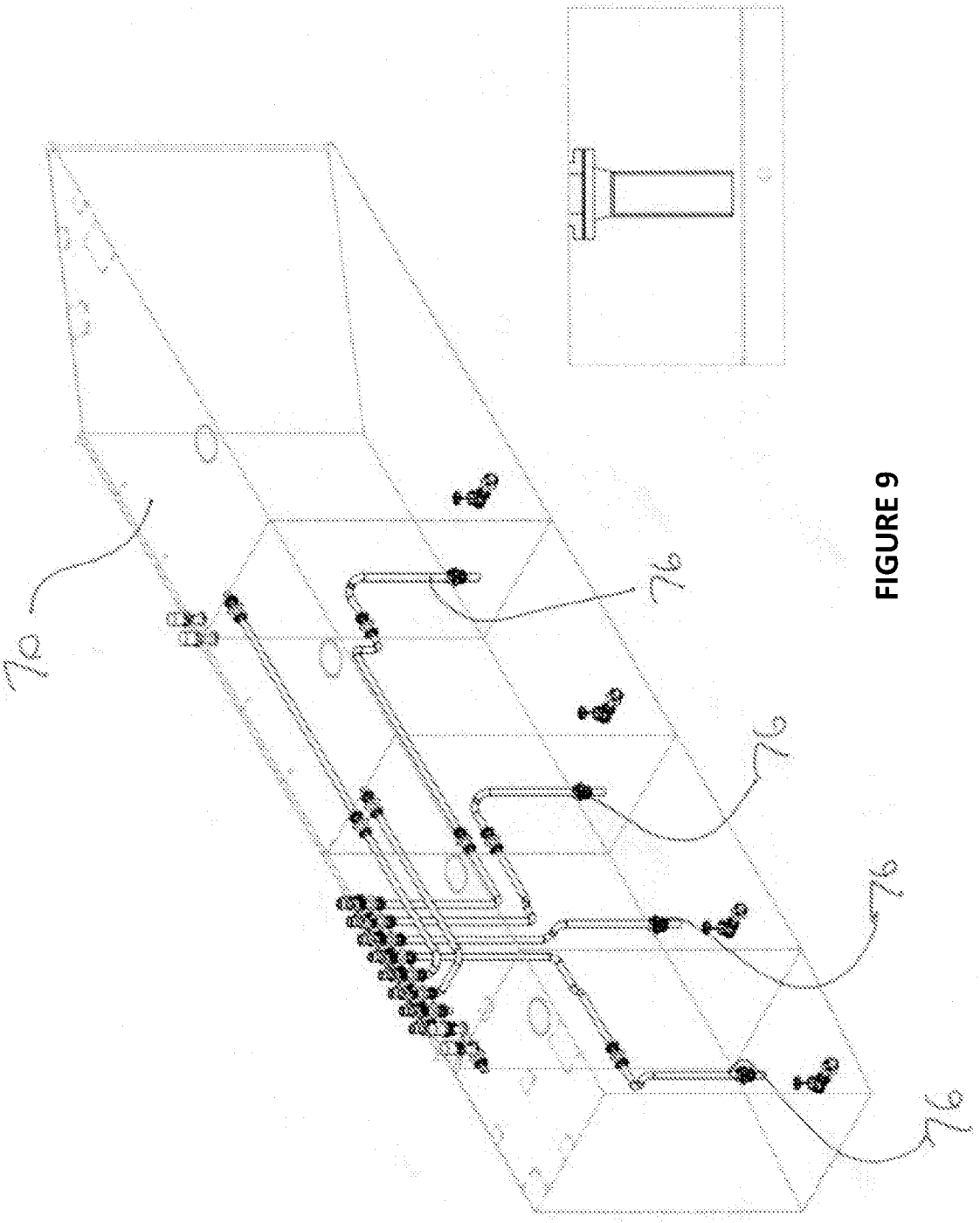

FIGURE 9

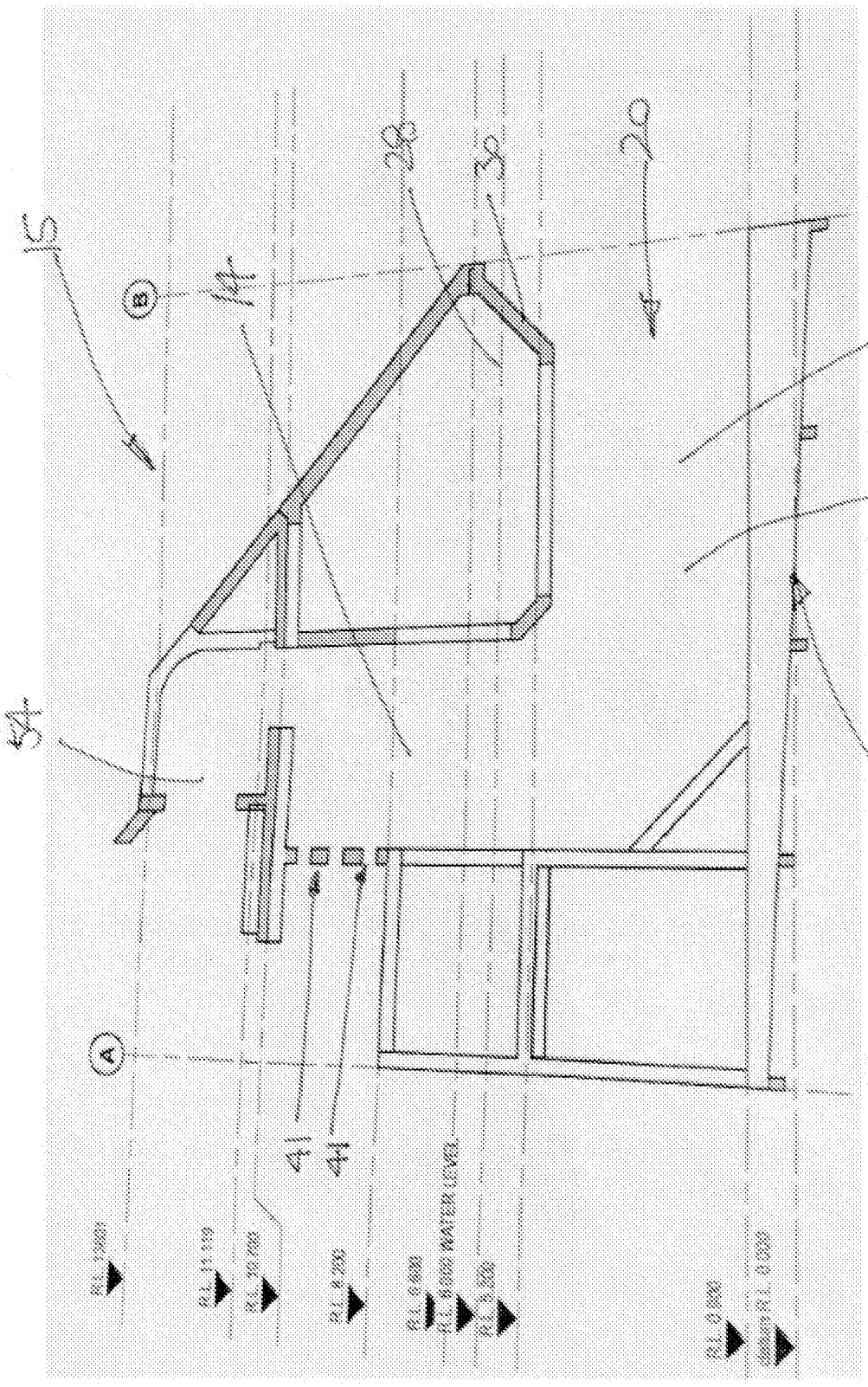

FIGURE 10

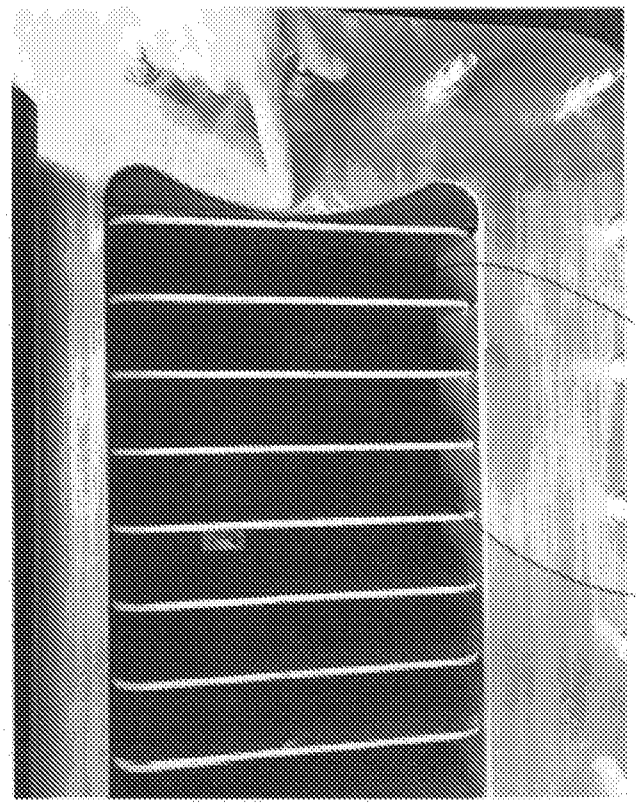

FIGURE 11B

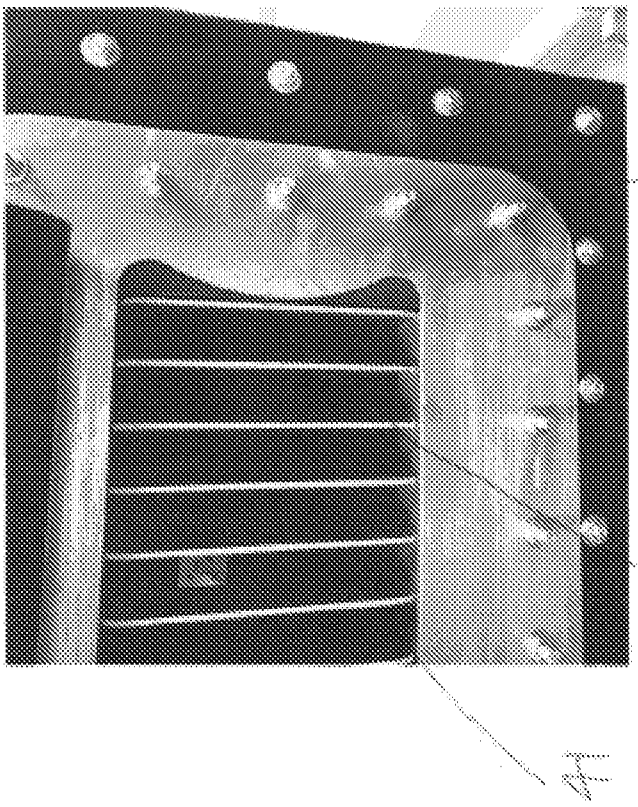

FIGURE 11A

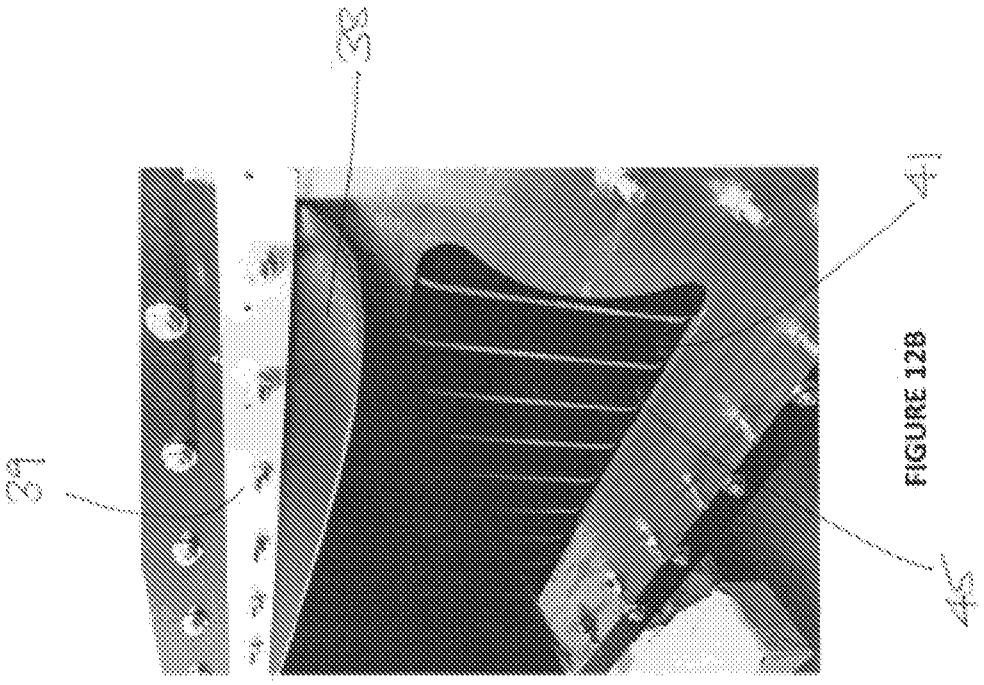

FIGURE 12B

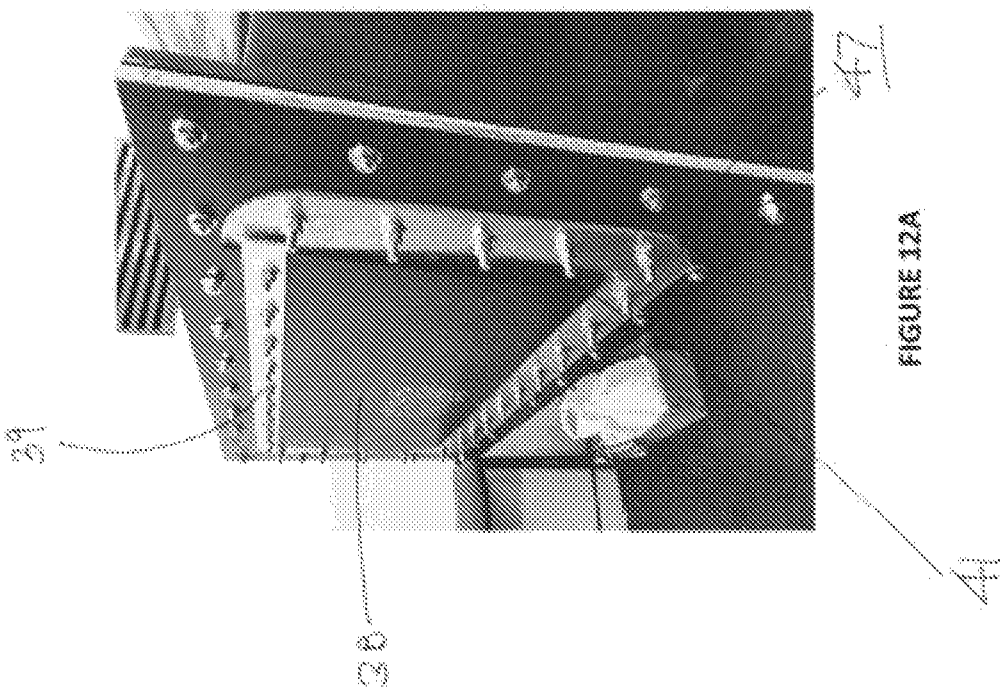

FIGURE 12A

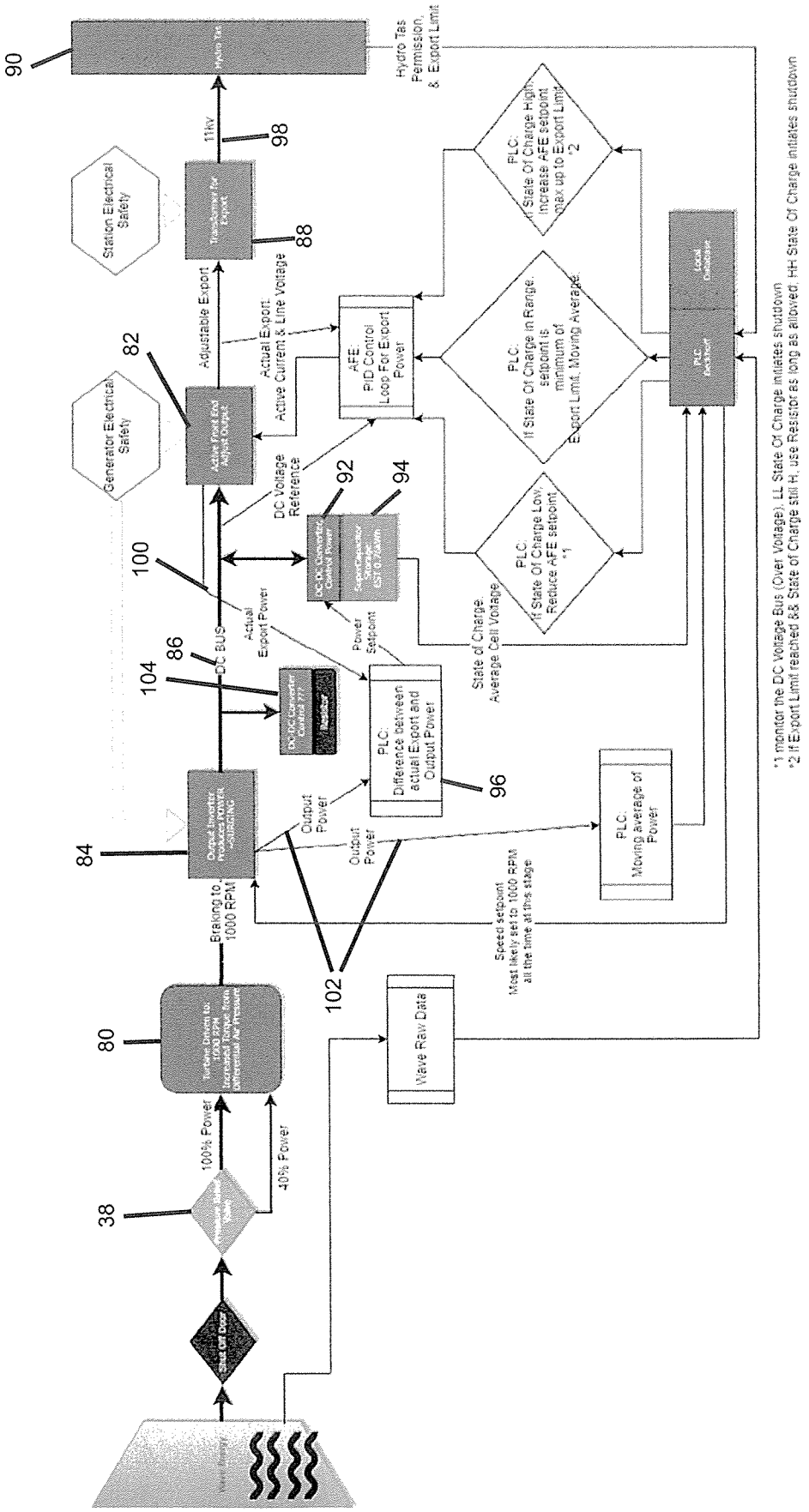
90
Hydro Tas Permission, & Export Limit
11kv
98
Station Electrical Safety
88
Adjustable Export
Actual Export: Active Current & Line Voltage
82
Generator Electrical Safety
AFE: PID Control Loop For Export Power
PLC: If State Of Charge High, Increase AFE setpoint max up to Export Limit *2
PLC: If State Of Charge in Range, setpoint is minimum of Export Limit, Moving Average
PLC: If State Of Charge Low, Reduce AFE setpoint *1
DC Voltage Reference
92
94
100
Actual Export Power
Power Setpoint
State of Charge, Average Cell Voltage
86
104
DC BUS
PLC: Difference between actual Export and Output Power
96
84
Output Power
Output Power
PLC: Moving average of Power
Braking to 1000 RPM
Speed setpoint Most likely set to 1000 RPM all the time at this stage
102
80
Wave Raw Data
100% Power
40% Power
38
Shut Out Door
*1 monitor the DC Voltage Bus (Over Voltage), LL State Of Charge initiates shutdown
*2 If Export Limit reached && State of Charge still H, use Resistor as long as allowed; HH State Of Charge initiates shutdown

FIGURE 13