(12) INTERNATIONAL APPLICATION PUBLISHED UNDER THE PATENT COOPERATION TREATY (PCT)

(19) World Intellectual Property Organization
International Bureau

(43) International Publication Date
30 September 2010 (30.09.2010)

PCT

(10) International Publication Number
WO 2010/110754 A1

(51) International Patent Classification:
C12M 1/00 (2006.01) *C12M 3/00* (2006.01)
B01L 3/00 (2006.01)

(21) International Application Number:
PCT/SG2010/000120

(22) International Filing Date:
26 March 2010 (26.03.2010)

(25) Filing Language: English

(26) Publication Language: English

(30) Priority Data:
200902107-2 26 March 2009 (26.03.2009) SG

(71) Applicant *(for all designated States except US)*: **AGENCY FOR SCIENCE, TECHNOLOGY AND RESEARCH** [SG/SG]; 1 Fusionopolis Way #20-10, Connexis, Singapore 138632 (SG).

(72) Inventors; and

(75) Inventors/Applicants *(for US only)*: **YU, Hanry** [SG/SG]; c/o Institute of Bioengineering and Nanotechnology, 31 Biopolis Way #04-01, Nanos, Singapore 138669 (SG). **ZHANG, Shufang** [CN/SG]; c/o Institute of Bioengineering and Nanotechnology, 31 Biopolis Way #04-01, Nanos, Singapore 138669 (SG). **LEO, Hwa Liang** [SG/SG]; c/o Institute of Bioengineering and Nanotechnology, 31 Biopolis Way #04-01, Nanos, Singapore 138669 (SG).

(74) Agent: **SCHIWECK, Wolfram**; Viering, Jentschura & Partner LLP, P.O. Box 1088, Rochor Post Office, Rochor Road, Singapore 911833 (SG).

(81) Designated States *(unless otherwise indicated, for every kind of national protection available)*: AE, AG, AL, AM, AO, AT, AU, AZ, BA, BB, BG, BH, BR, BW, BY, BZ, CA, CH, CL, CN, CO, CR, CU, CZ, DE, DK, DM, DO, DZ, EC, EE, EG, ES, FI, GB, GD, GE, GH, GM, GT, HN, HR, HU, ID, IL, IN, IS, JP, KE, KG, KM, KN, KP, KR, KZ, LA, LC, LK, LR, LS, LT, LU, LY, MA, MD, ME, MG, MK, MN, MW, MX, MY, MZ, NA, NG, NI, NO, NZ, OM, PE, PG, PH, PL, PT, RO, RS, RU, SC, SD, SE, SG, SK, SL, SM, ST, SV, SY, TH, TJ, TM, TN, TR, TT, TZ, UA, UG, US, UZ, VC, VN, ZA, ZM, ZW.

(84) Designated States *(unless otherwise indicated, for every kind of regional protection available)*: ARIPO (BW, GH, GM, KE, LR, LS, MW, MZ, NA, SD, SL, SZ, TZ, UG, ZM, ZW), Eurasian (AM, AZ, BY, KG, KZ, MD, RU, TJ, TM), European (AT, BE, BG, CH, CY, CZ, DE, DK, EE, ES, FI, FR, GB, GR, HR, HU, IE, IS, IT, LT, LU, LV, MC, MK, MT, NL, NO, PL, PT, RO, SE, SI, SK, SM, TR), OAPI (BF, BJ, CF, CG, CI, CM, GA, GN, GQ, GW, ML, MR, NE, SN, TD, TG).

[Continued on next page]

(54) Title: APPARATUS FOR CELL OR TISSUE CULTURE

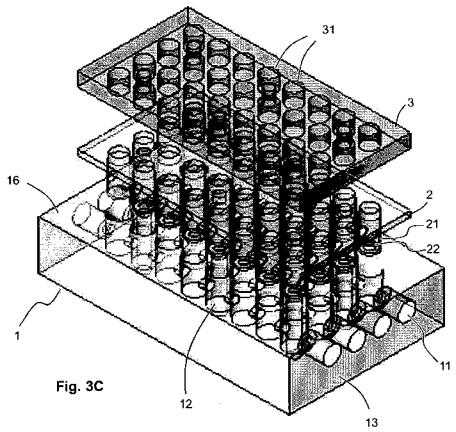

Fig. 3C

(57) Abstract: The apparatus for cell or tissue culture comprises a base plate (1), an intermediate face (2) and a top plate (3). The intermediate face (2) is removably sandwiched between the base plate (1) and the top plate (3). The base plate (1) has a circumferential wall (13), a base (14) and a top wall (16). The top wall (16) of the base plate (1) comprises a plurality of recesses (12) arranged in n lines, wherein n is an integer from 1 to about 25. Each line of recesses (12) ranges from a first recess to a last recess. Each recess has a circumferential recess wall (15), which has one recess inlet and one recess outlet (40, 41). The circumferential wall (13) comprises a number of 2 n ports (11). Each port (11) is coupled to a single line of recesses (12). The recesses (12) of each line of recesses are in fluid communication with (i) each other via the recess inlets and a recess outlets (40, 41) and (ii) with a first and a second port (11) of the 2 n ports, such that the first recess of each line of recesses is coupled to a first port and the last recess of each line of recesses is coupled to a second port. The intermediate face (2) has a plurality of recesses (21) arranged in m lines, fitted into the plurality of recesses (12) of the top wall (16) of the base plate (13). m is an integer from 1 to about 25 equal to or smaller than n. The recesses (21) of the intermediate face (2) have water permeability. The top plate (3) is reversibly sealed to the intermediate face (2) and the intermediate face (2) is reversibly sealed to the base plate (1). Thus the recesses (12) of the top wall (16) of the base plate (1) define culture chambers. Each culture chamber has a circumferential wall defined by the recess wall (15) and a removable top, which is defined by a portion of the top plate (3).

WO 2010/110754 A1

Published:

— *with international search report (Art. 21(3))*