9500563-3

IPDSS copy

34335

BRITISH PATENT SPECIFICATION

Application No.	**9411083.0**
Application Date	**3rd June 1994**
Priority Date	**-**

APPLICANTS **LIM, Jit Yong**
KAM, Chai Heng

Reddie & Grose
Chartered Patent Agents
European Patent Attorneys

16 Theobalds Road,
London, WC1X 8PL
Telephone: 071-242 0901
Facsimile: 071-242 3290/0286
Telex: 25445 Reddie G

IMITATION FIRE-CRACKER

The present invention relates to an imitation fire-cracker.

Conventional fire-crackers have been used for many years, frequently to mark special occasions and during the course of celebrations. For example, fire-crackers have traditionally been used to commemorate the Chinese New Year. The conventional fire-cracker is a simple kind of fire-work, designed solely to produce a loud bang. Fire-crackers contain a small amount of gun powder, or an equivalent explosive material, which explodes when ignited, thereby producing the characteristic "bang". A short fuse is incorporated into the fire-cracker for the user to light the fire-cracker. The body of a fire-cracker is conventionally red and may have words or symbols in a different colour.

There are numerous disadvantages with conventional fire-crackers. If a fire-cracker is used carelessly, the explosion can cause serious injury, either to the user or to by-standers. Another disadvantage stems from the fact that the fuse must first be ignited before the fire-cracker will explode, so that fire is always a potential hazard. In addition, the explosive material in the firecracker may produce noxious by-products which pollute the air when ignited. Conventional fire-crackers are inherently dangerous, especially in crowded places, and for this reason their use is strictly controlled in some countries.

According to the present invention there is provided an imitation fire-cracker comprising an elongate, substantially cylindrical opaque body and an imitation fuse extending from one end of the body for resemblance to a conventional fire-cracker, the body having therein a gas-filled, air-tight chamber which ruptures catastrophically when the body is crushed, the gas filling the chamber being one or more gases selected from the inert gases and the air gases.

The catastrophic failure of the air-tight chamber produces a sound similar to that of an exploding,

conventional fire-cracker. However, the imitation fire-cracker utilizes a completely different method to generate the bang obviating the need for gun powder and fire. Instead, the catastrophic rupture of the chamber and the sudden release of the trapped gas results in an abrupt localized change in air pressure which generates the characteristic sound wave.

Preferably, the gas inside the chamber is above atmospheric pressure to enhance the resultant bang when the body of the imitation fire-cracker is crushed.

According to a first embodiment of the invention the inner periphery of the cylindrical body defines the full extent of the chamber. Hence the cylindrical body must be constructed from a material which is air-tight, and yet which is sufficiently fragile to rupture catastrophically when the body is crushed. On the other hand, the material must be durable to prevent the imitation fire-cracker from accidentally deflating prior to use. Polyethylene is one example of a suitable material. Polyethylene is a waterproof material which confers the advantage of enabling the imitation fire-cracker to be used outdoors in all weather conditions. The performance of a conventional fire-cracker can be impaired in wet weather.

According to a second embodiment of the invention, the cylindrical body contains a separate air-tight bag which, when filled with gas, forms the chamber. Although with this it is preferable for the bag to fit snugly within the cylindrical body, the bag (and hence the chamber) need not be cylindrical. A bag which abuts the inner periphery of the cylindrical body results in an imitation fire-cracker that is resilient to accidental distortions of shape. It is important for the imitation fire-cracker to retain a substantially cylindrical appearance until the instant when it is deformed catastrophically.

For increased resemblance to a real fire-cracker, the outside of the imitation fire-cracker may be red. The cylindrical body of a imitation fire-cracker

according to the first or second embodiment of the invention may be made from a material impregnated with a red pigment; may be painted red either before or after the chamber is inflated with gas; or may be covered in a red-coloured material, such as fabric or paper. If a covering is employed, it must not interfere with the rupturing of the chamber at the critical instant when external pressure is applied to the body.

Conventional fire-crackers are manufactured in various shapes and sizes, and imitation fire-crackers can be made to mirror these variations. For example, the cylindrical body of the imitation fire-cracker may be of elliptical or polygonal cross section. In addition, imitation fire-crackers may be constructed so as to rupture under different load conditions. For example, a small imitation fire-cracker, which fits onto the palm of one hand, may be designed to rupture catastrophically when crushed manually. Alternatively, a larger size fire-cracker may require a larger crushing force, perhaps equivalent to that generated by stamping, in order to produce the requisite bang.

Embodiments of the invention will now be described, by way of example, with reference to the accompanying drawings, in which:

Figure 1 is a perspective view of an imitation fire-cracker;

Figure 2 is a cross-sectional view of an imitation fire-cracker according to a first embodiment of the invention;

Figure 3 is a cross-sectional view of an imitation fire-cracker according to a second embodiment of the invention.

Figure 1 shows a perspective view of an imitation fire-cracker 10 embodying the invention. The imitation fire-cracker 10 consists of right-circular cylindrical body 11 and an imitation fuse 12 which projects from the centre of one circular end 13 of the cylindrical body 11. The imitation fire-cracker 10 has the outward appearance of a typical, conventional fire-

cracker or "stick of dynamite". The outside of the cylindrical body 11 is red and the fuse 12 is white.

Figure 2 shows in longitudinal cross-section, an imitation fire-cracker 10 according to the first embodiment of the invention. The cylindrical body 11 consists of a tube 15, the bore of which is closed-off at the axial ends of the tube to form a chamber 16. The cylindrical body 11 is constructed from an air-tight plastics material which is hermetically sealed after the chamber 16 has been filled with gas. A red plastics material is used or, once sealed, the cylindrical body 11 is painted red for resemblance to a conventional fire-cracker.

Figure 3 shows in longitudinal cross-section an imitation fire-cracker 10 according to the second embodiment of the invention. In this embodiment, the tube 15 of the cylindrical body is made of paper and contains a bag 20 within its bore. The bag 20 is made from an air-tight material such as polyethylene or cellophane. The bag 20 is inflated through an opening with gas from a hand pump to a level above atmospheric pressure and is then hermetically sealed to form the air-tight chamber 16. If the bag 20 is made of polyethylene, the seal can be effected using two parallel heating elements which, in use, weld the opening in the bag 20 closed. Inside the cylindrical body 11, the sealed bag 20 abuts the inner periphery of the body although it need not entirely fill the interior of the body. The axial ends of the tube 15 are sealed with cardboard discs 17 which are glued to the bag 20 and then are covered with paper, concealing the bag 20 inside the bore. Although the cylindrical body 11 is constructed from paper, the imitation fire-cracker is resilient to accidental distortions in shape due to the presence of the bag 20 and the cardboard discs 17. The paper should be red so that the outside of the cylindrical body 11 resembles a conventional fire-cracker.

The bag 20 may be made longer than the tube 15 and inflated to about atmospheric pressure so that substantially the whole of the inward facing surface of each disc 17 is in contact with the bag 20 inside the tube 15.

Conventional fire-crackers are made in many different sizes, and imitation fire-crackers 10 can be made to match these variations. In the two embodiments of the invention illustrated herein, the ratio of the length (l) of the cylindrical body 11 to the diameter (d) of the cylindrical body 11 is approximately 2:1. This ratio can however vary significantly without departing from the present invention.

A bang is produced by crushing the cylindrical body 11 of an imitation fire-cracker 10 in order to rupture the chamber 16. The crushing force required to produce the bang depends upon the design specifications of each individual imitation fire-cracker 10. The design may be such that the chamber ruptures simply by placing the imitation fire-cracker on the palm of one hand and hitting it with the other hand. A more robust, and possibly larger, imitation fire-cracker may have to be placed on the ground and stamped upon in order to produce the desired effect.

The gas used to fill the chamber 16 may be air, or a single atmospheric gas (preferably nitrogen), or an inert gas such as helium, or a suitable mixture of gases. The gas or mixture chosen should be harmless to humans and animals and preferably does not promote combustion.

CLAIMS:

1. An imitation fire-cracker comprising an elongate, substantially cylindrical opaque body and an imitation fuse extending from one end of the body for resemblance to a conventional fire-cracker, the body having therein a gas-filled, air-tight chamber which ruptures catastrophically when the body is crushed, the gas filling the chamber being one or more gases selected from the inert gases and the air gases.

2. An imitation fire-cracker according to claim 1 in which the gas inside the chamber is pressurized above atmospheric pressure.

3. An imitation fire-cracker according to claim 1 or 2 in which the inner periphery of the body defines the chamber, the body being air-tight.

4. An imitation fire-cracker according to claim 1 or 2 in which the air-tight chamber is an hermetically sealed bag contained within the body.

5. An imitation fire-cracker according to any preceding claim in which the axial ends of the substantially cylindrical body are reinforced to provide resistance to accidental distortions in the shape of the body.

6. An imitation fire-cracker according to any preceding claim in which catastrophic rupture is achievable by manual crushing of the body.

7. An imitation fire-cracker according to any preceding claim in which the length of the body is between one (1) and five (5) times the diameter of the body.

8. An imitation fire-cracker according to any preceding claim in which the external surface of the body

* C L M S *

is red.

9. A imitation fire-cracker substantially as hereinbefore described with reference to Figure 2 or Figure 3 of the accompanying drawings.

ABSTRACT

Figure 3

IMITATION FIRE-CRACKER

An imitation fire-cracker 10 consists of a cylindrical body 11 and an imitation fuse 12 which is joined to the centre of one end of the cylindrical body 11. The cylindrical body is hollow and conceals a gas-filled, air-tight bag 20. The axial ends of the cylindrical body 11 are reinforced by discs 17 which resist accidental distortions in the shape of the body.

A "bang" with an imitation fire-cracker is produced by crushing the cylindrical body 11, causing the bag 20 to rupture catastrophically.

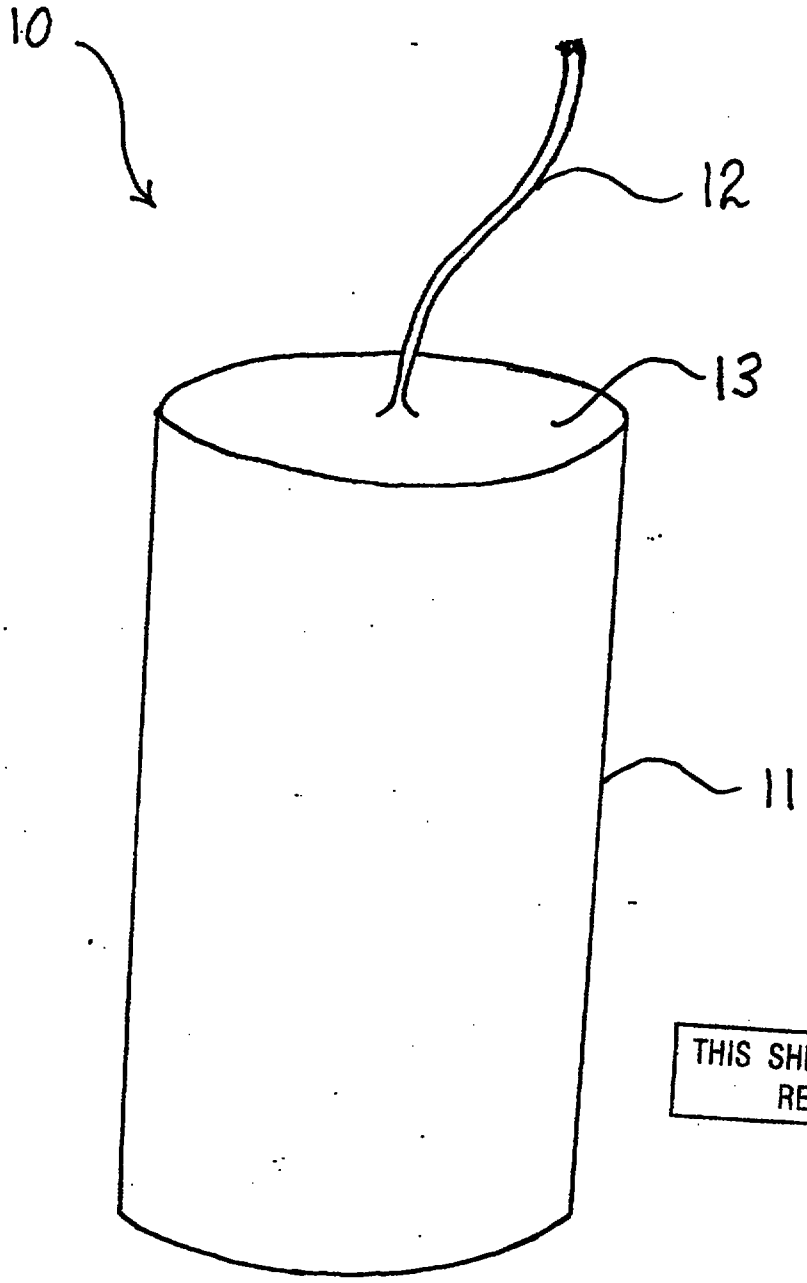

THIS SHEET HAS BEEN REPLACED

FIGURE 1

This Sheet Has Been Replaced

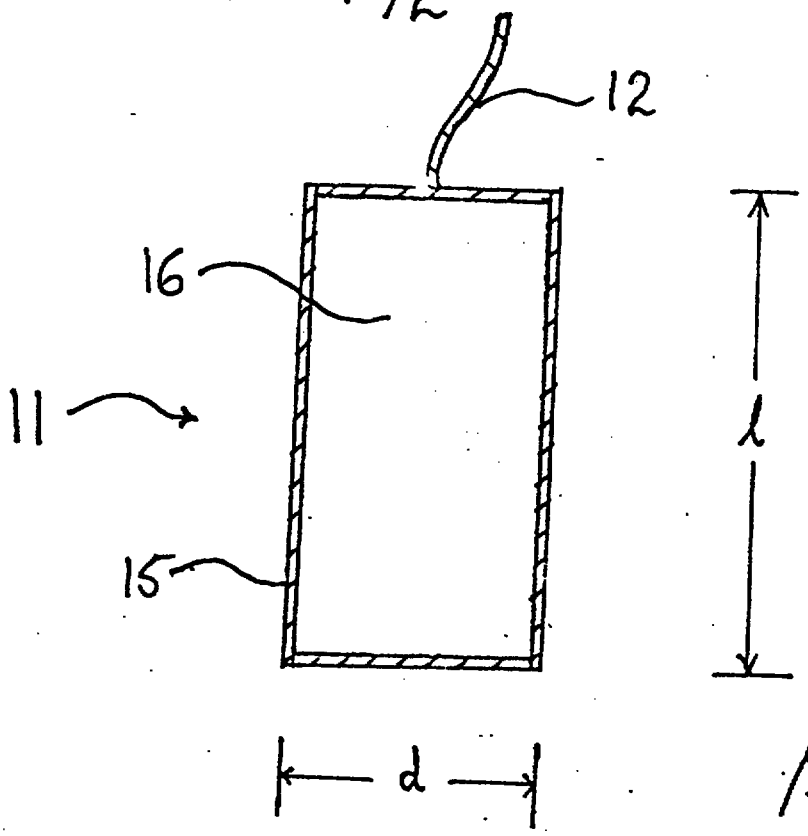

FIGURE 2

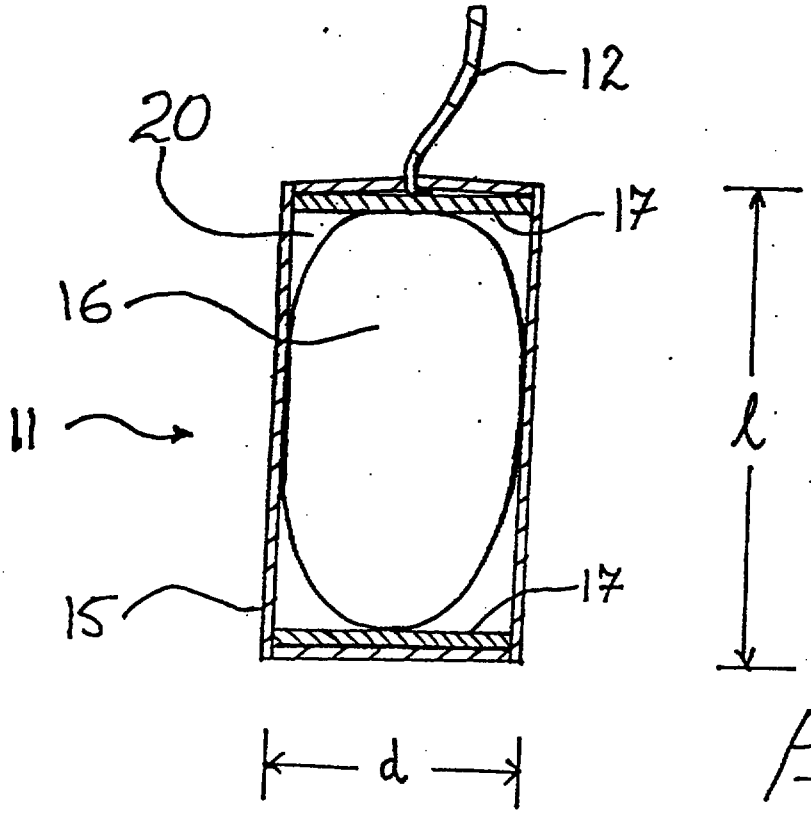

FIGURE 3

RECEIVED
17 JUN 1996

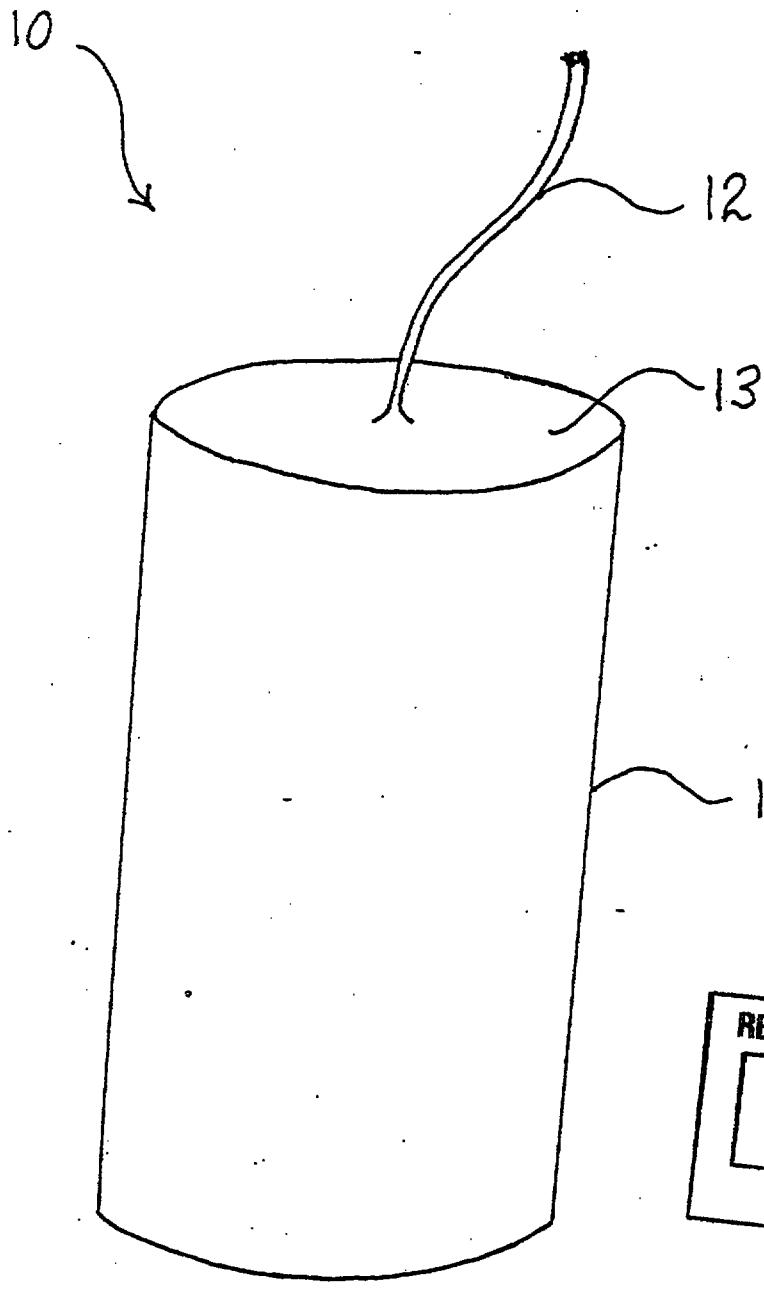

REPLACEMENT SHEET
17 JUN 1996

This is the replacement sheet

Date: 17 JUN 1996

FIGURE 1