

FIGURE 1

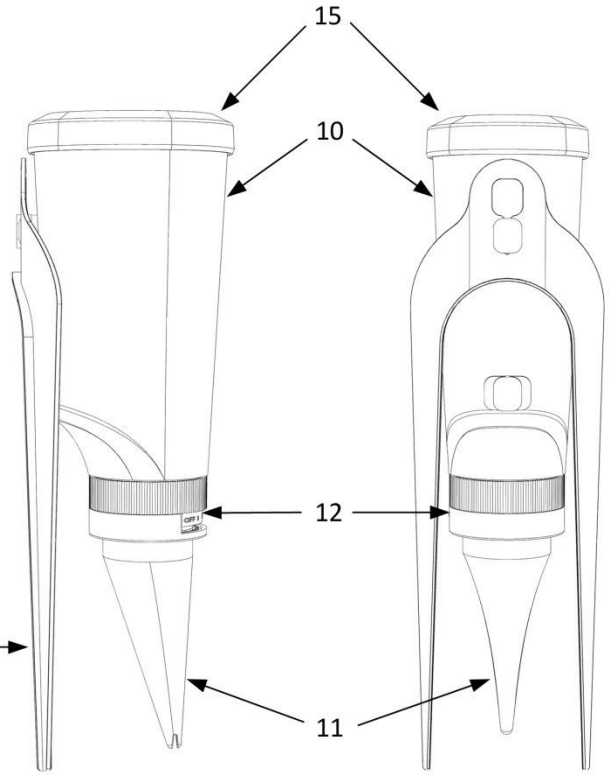

FIGURE 1A

FIGURE 1B

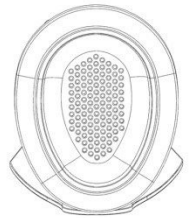

FIGURE 1C

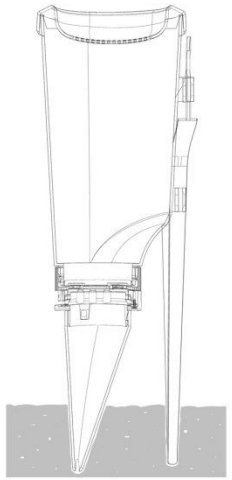

FIGURE 1D

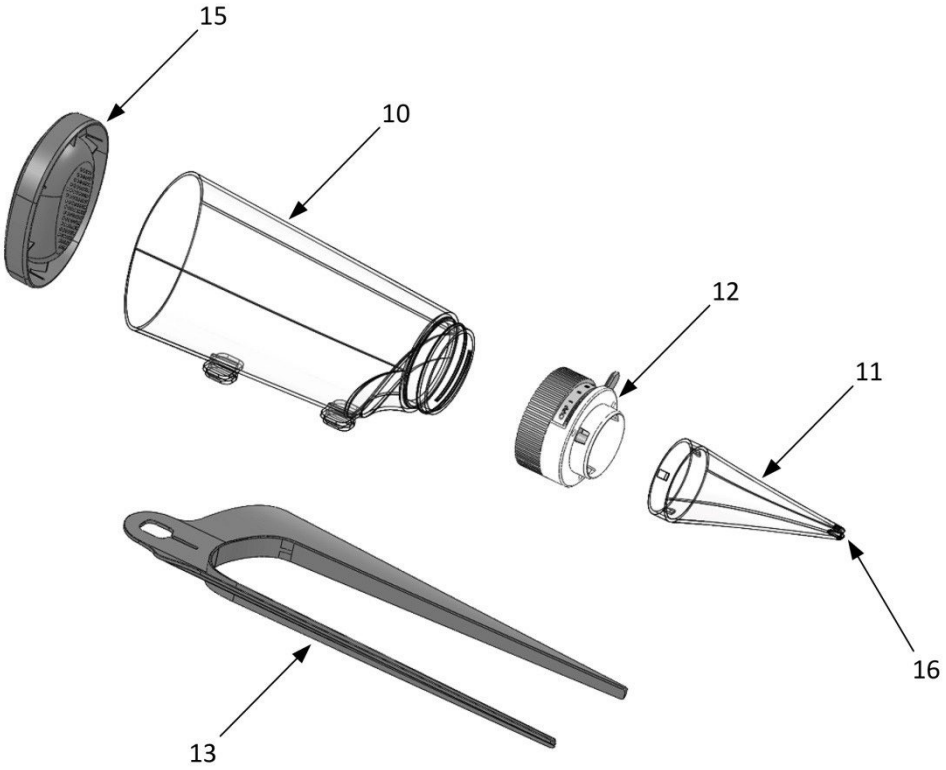

FIGURE 2A

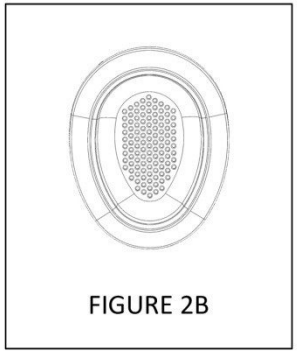

FIGURE 2B

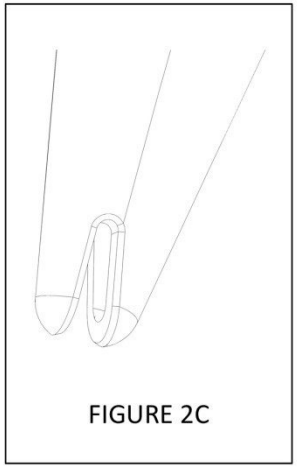

FIGURE 2C

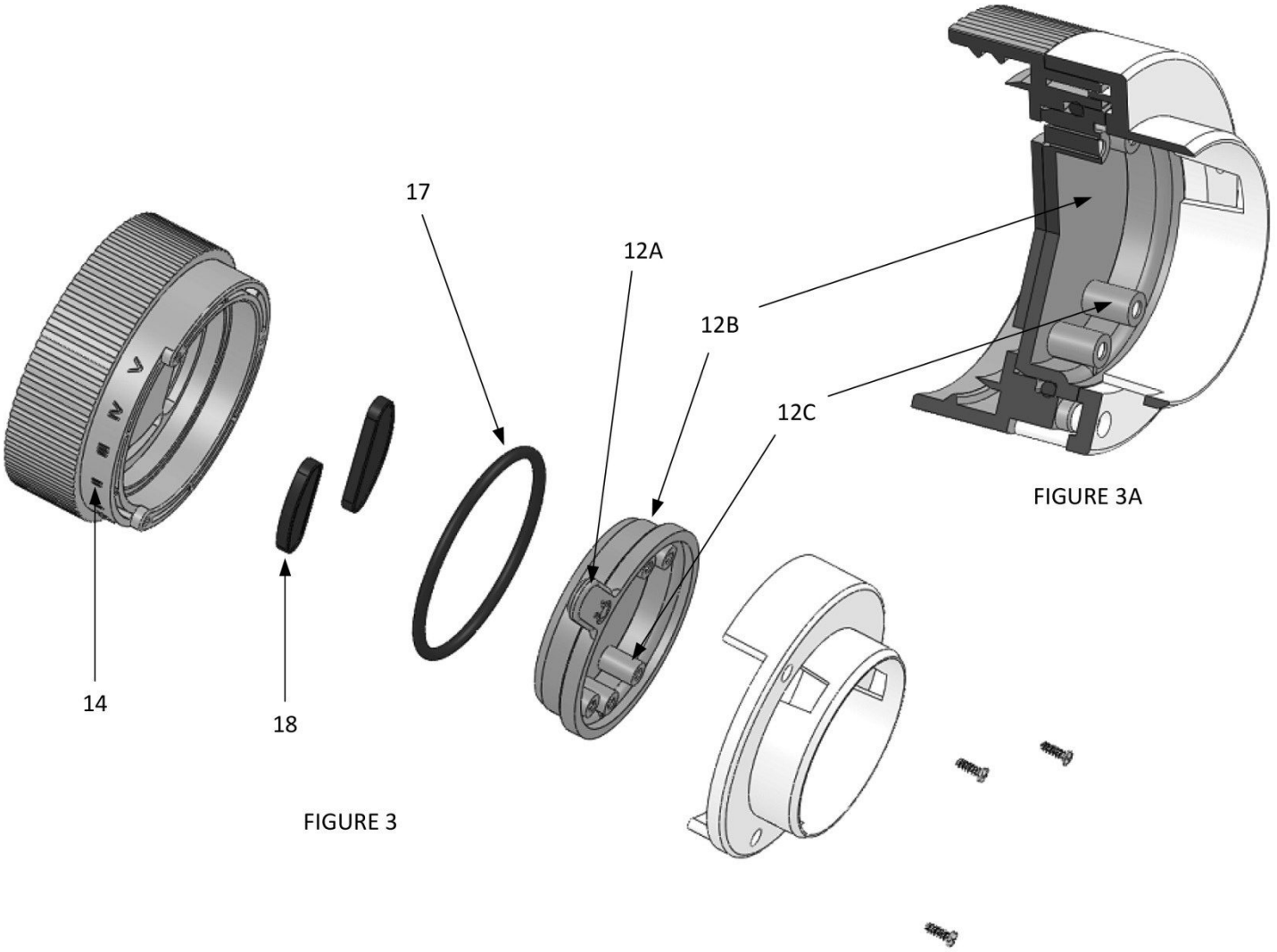

FIGURE 3

FIGURE 3A

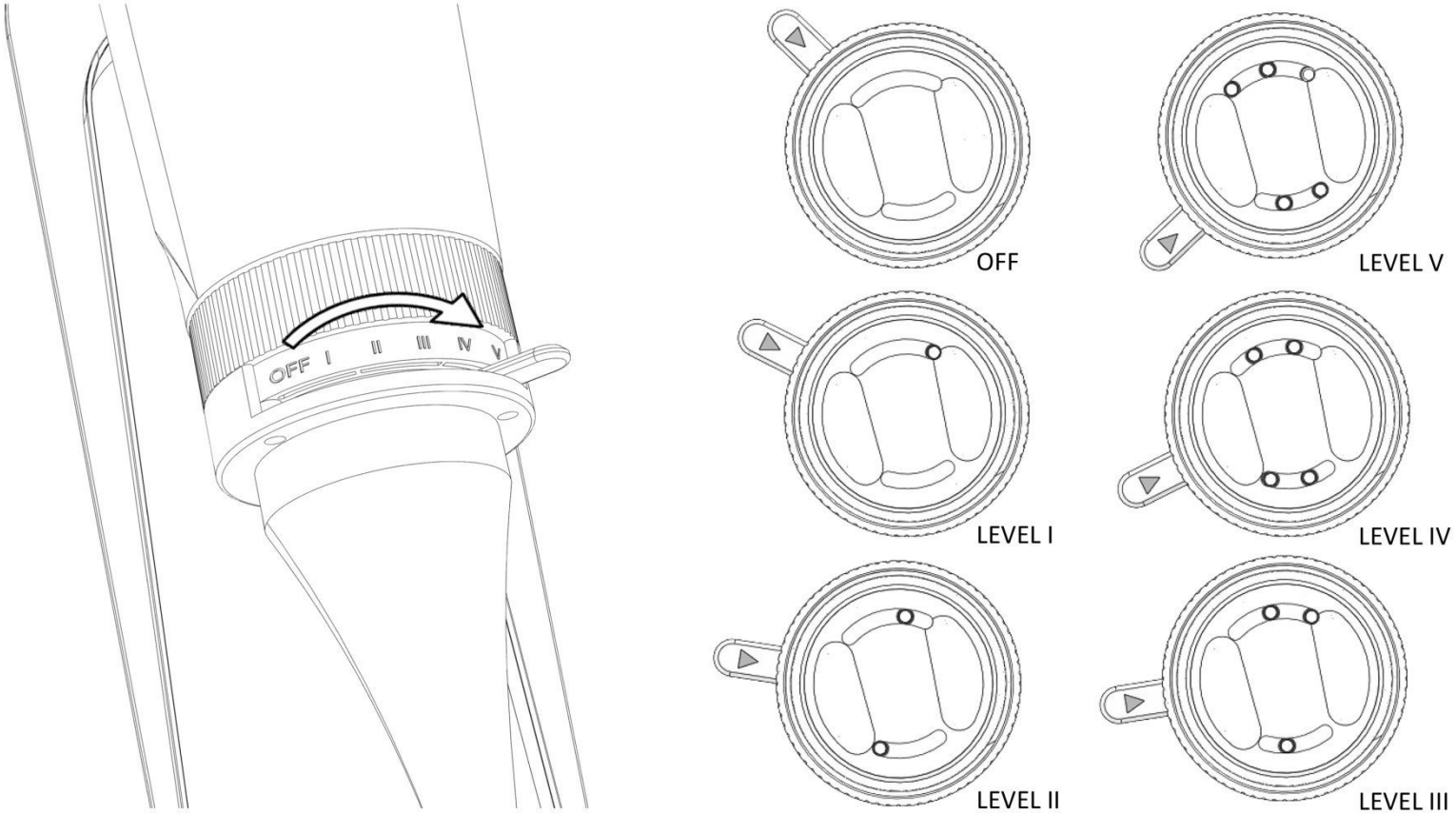

FIGURE 4

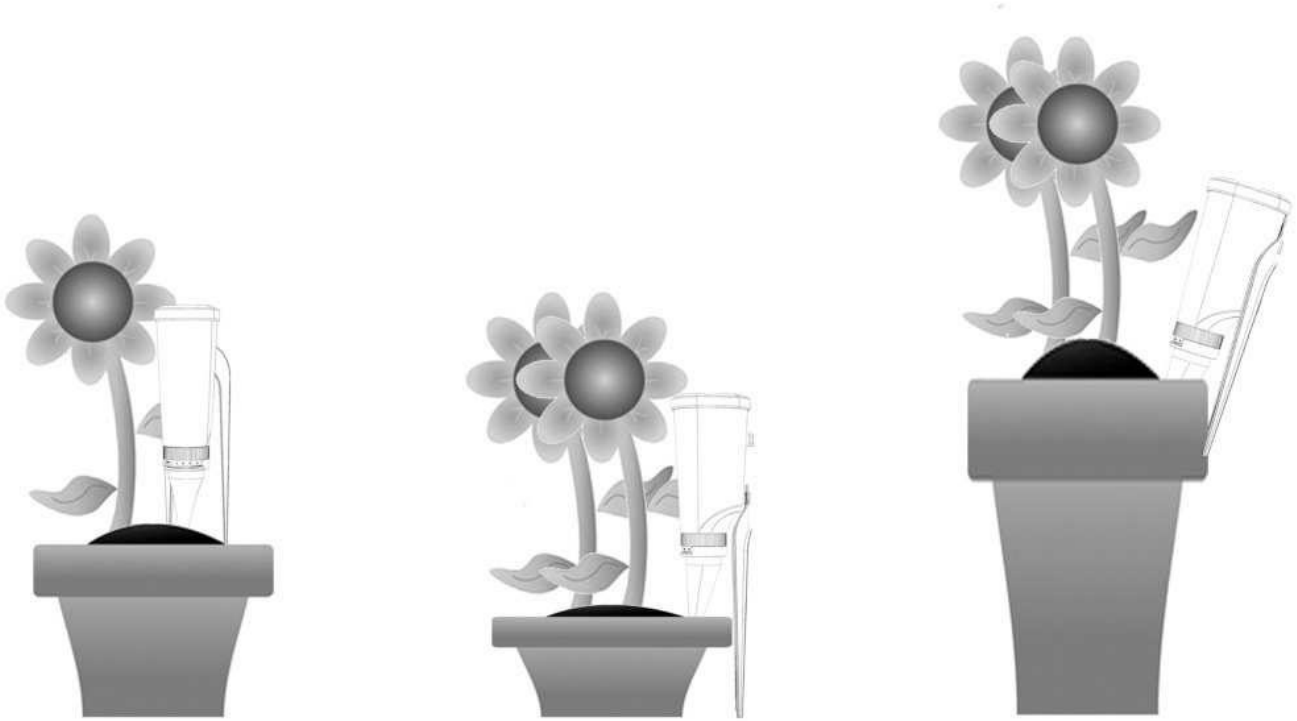

FIGURE 5

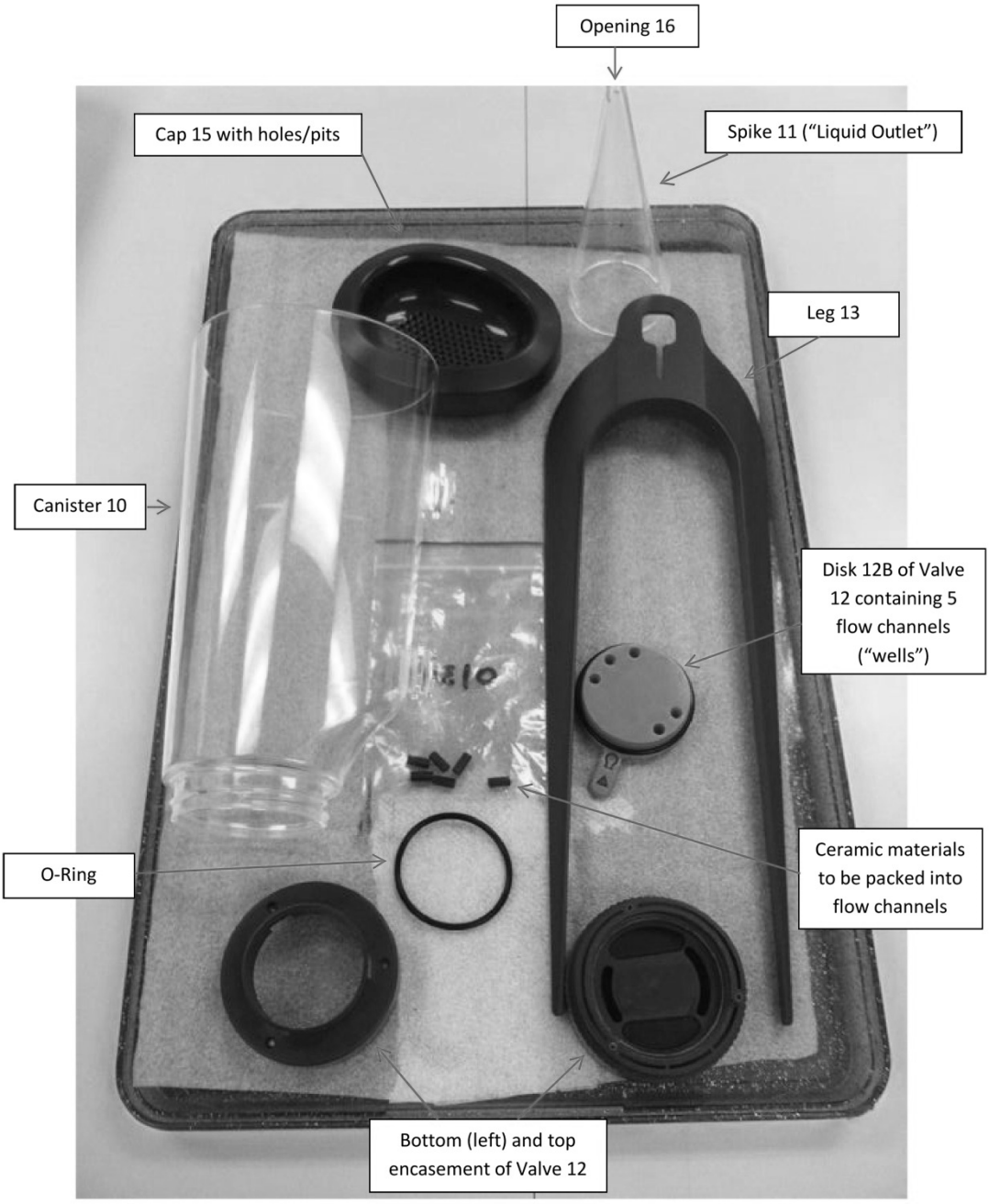
Opening 16
Cap 15 with holes/pits
Spike 11 ("Liquid Outlet")
Leg 13
Canister 10
Disk 12B of Valve 12 containing 5 flow channels ("wells")
O-Ring
Ceramic materials to be packed into flow channels
Bottom (left) and top encasement of Valve 12

FIGURE 6