SPECIFICATION

TITLE OF THE INVENTION

COMPONENT MOUNTING APPARATUS AND METHOD, AND COMPONENT MOUNTING EQUIPMENT

BACKGROUND OF THE INVENTION

The present invention relates to component mounting apparatus and method for automatically mounting a variety of components such as electronic components onto a printed circuit board or the like, and a component mounting equipment including the apparatuses.

Generally, in an electronic component mounting apparatus, a number of component supply means are mounted in parallel to one another on a component supply table. In a component mounting stage, the component supply means are successively positioned in a specified component supply position according to a sequence of mounting components while moving the component supply table in a direction in which the component supply means are arranged in parallel. Then, each of the components at the component supply means is taken out by suction by a mounting head section, and the components are transferred to a circuit board positioned in the circuit board positioning section to be subjected to a component mounting process.

This type of conventional component mounting apparatus will be described with reference to Fig. 6

REPLACED SHEETS SG
☐ Description : paged ..... to paged .....
☐ Claim(s) : paged ..... to paged .....
☐ Drawing(s) : paged ..... to paged .....
☑ Abstract : paged ...1... to paged ...2.....
DATE OF RECEIPT .....

showing a perspective view of it and Fig. 7 showing a schematic plan view of it. In Fig. 6, at the front of an apparatus body 1 is provided a board positioning section 4 for positioning a circuit board P supplied from a board supply means 2 in a mounting position, and the circuit board P mounted with the required components in the board positioning section 4 is discharged by a board discharge means 3. On the other hand, at the rear of the apparatus body 1 is provided a component supply section 7, and a rotary type mounting head section 8 is provided between the component supply section 7 and the aforementioned board positioning section 4 as shown in Fig. 7.

In the component supply section 7 are laterally movably provided two component supply tables 10 and 11 independently of each other on a guide rail 9. The component supply tables 10 and 11 are mounted with a number of component supply means 12 arranged in parallel to one another in a direction in which the component supply tables 10 and 11 move. There is illustrated generally so-called the parts cassette as the component supply means 12, and it will be simply described below. That is, electronic components of an identical type are stored as arranged at regular intervals on a carrier tape while being wound around a reel 13 as covered with a cover tape. By drawing out the carrier tape from the reel 13 to feed it at a pitch

equal to the storage intervals of the components and taking up the cover tape, the electronic component located at the leading end is positioned in a component supply position A opposite to a component suction head 14 of the mounting head section 8.

Furthermore, as shown in Fig. 7, the mounting head section 8 is constructed by providing a plurality of component suction heads 14 at regular angular intervals on an identical circle of a rotary table (not shown) provided rotatably around a vertical axis. Each component suction head 14 is designed to suck a component by vacuum suction means. Upon intermittently rotating the rotary table, it is stopped in steps in the component supply position A and a component mounting position B in order to concurrently perform receiving of each component from the component supply means 12 and mounting of each component onto the circuit board P. While one component supply table 10 is supplying components, the other component supply table 11 that is retreating in a standby position performs changing of component supply means 12 and replenishing of components thereby achieving preparation so that the component mounting apparatus can be operated incessantly.

In recent years, there has been a growing trend that the types of circuit boards P to be manufactured and the types of components to be mounted on the circuit boards

P are increasing. In order to cope with the above, it can be considered to increase the number of component supply means 12 to be mounted to the component supply tables 10 and 11. However, in such a case, the component supply tables 10 and 11 are to be elongated sidewise according to the increase in number of the component supply means 12 to be mounted. Consequently, the length of the entire component supply section 7 becomes very long, and this leads to a degraded space utilization efficiency, reducing the productivity per floor area.

A more important issue is that the component supply tables 10 and 11 are fed at a pitch in accordance with taking out the components by the mounting head section 8, and therefore, the following inconvenience occurs. That is, when the component supply tables 10 and 11 increase in weight according to the increase of their lengths, not only a great drive power is required to move the component supply tables 10 and 11 but also the inertial force of the component supply tables 10 and 11 increases. Therefore, vibration in feeding the component supply tables 10 and 11 at a pitch significantly increases. Consequently, it is impossible to increase the component supply rate, or the component mounting operation speed.

SUMMARY OF THE INVENTION

Accordingly, it is an object of the present

invention to provide component mounting apparatus and method capable of increasing the component mounting operation speed without dimensionally increasing the whole apparatus even when the types of boards and the number of components to be mounted on each board increase, and a component mounting apparatus employing the apparatus.

In accomplishing these and other objects, according to a first aspect of the present invention, there is provided a component mounting apparatus comprising:

a pair of component supply tables on which components are accommodated and which are arranged on both sides of a board mounting position where a board is positioned;

a first mounting head section for successively picking up the components at one of the component supply tables and thereafter successively mounting the picked-up components onto the board; and

a second mounting head section for successively picking up the components at the other of the component supply tables and thereafter successively mounting the picked-up components onto the board,

wherein the first and second mounting head sections are independently operated.

According to a second aspect of the present invention, there is provided the component mounting

apparatus as claimed in the first aspect, wherein the first and second mounting head sections are controlled mutually in operation in accordance with a timing at which, when one of them carries out a component picking-up operation for picking up the components from the component supply table, the other of them carries out a component mounting operation for mounting the picked-up components onto the board.

According to a third aspect of the present invention, there is provided the component mounting apparatus as claimed in the first aspect, wherein one of the first and second mounting head section has component suction nozzles sucking the components at one time.

According to a fourth aspect of the present invention, there is provided the component mounting apparatus as claimed in the second aspect, wherein one of the first and second mounting head section has component suction nozzles sucking the components at one time.

According to a fifth aspect of the present invention, there is provided a component mounting equipment comprising:

a plurality of component mounting apparatuses each of which is claimed in the first aspect,

wherein a board transfer path along which the board is supplied to the board mounting position of the apparatus

and discharged from the board mounting position of the apparatus by a board transfer device is provided so that the board transfer path connects the board mounting positions of the component mounting apparatuses, and the component supply tables of the component mounting apparatuses are arranged on both sides of the board mounting positions in the board transfer path.

According to a sixth aspect of the present invention, there is provided a component mounting equipment comprising:

a plurality of component mounting apparatuses each of which is claimed in the second aspect,

wherein a board transfer path along which the board is supplied to the board mounting position of the apparatus and discharged from the board mounting position of the apparatus by a board transfer device is provided so that the board transfer path connects the board mounting positions of the component mounting apparatuses, and the component supply tables of the component mounting apparatuses are arranged on both sides of the board mounting positions in the board transfer path.

According to a seventh aspect of the present invention, there is provided the component mounting equipment as claimed in the fifth aspect, wherein the components to be mounted onto the single board are all

distributed into groups by type, and the components of the groups are accommodated in the component supply tables of the component mounting apparatuses as assigned thereto.

According to an eighth aspect of the present invention, there is provided the component mounting equipment as claimed in the sixth aspect, wherein the components to be mounted onto the single board are all distributed into groups by type, and the components of the groups are accommodated in the component supply tables of the component mounting apparatuses as assigned thereto.

According to a ninth aspect of the present invention, there is provided a component mounting method comprising steps of:

picking up by a first mounting head section components from one of a pair of component supply tables on which the components are accommodated and which are arranged on both sides of a board mounting position where a board is positioned, the first mounting head section successively picking up the components at one of the component supply tables;

thereafter successively mounting the components picked up by the first mounting head section onto the board;

picking up by a second mounting head section components from the other of the pair of component supply

tables, the second mounting head section successively picking up the components at the other of the component supply tables; and

thereafter successively mounting the components picked up by the second mounting head section onto the board,

wherein the picking-up and mounting steps of the first mounting head section and the picking-up and mounting steps of the second mounting head section are independently carried out.

According to a tenth aspect of the present invention, there is provided the component mounting method as claimed in the ninth aspect, wherein the picking-up step of the first mounting head section and the mounting step of the second mounting head section are carried out at the same time, and the mounting step of the first mounting head section and the picking-up step of the second mounting head section are carried out at the same time.

According to an eleventh aspect of the present invention, there is provided the component mounting method as claimed in the ninth aspect, wherein in a component mounting equipment comprising a plurality of component mounting apparatuses each of which comprises the first and second mounting head sections and the pair of component supply tables between which a board transfer path along

which the board is supplied to the board mounting position of the apparatus and discharged from the board mounting position of the apparatus by a board transfer device is provided so that the board transfer path connects the board mounting positions of the component mounting apparatuses, and the component supply tables of the component mounting apparatuses are arranged on both sides of the board mounting positions in the board transfer path,

the picking-up and mounting steps of the first mounting head section and the picking-up and mounting steps of the second mounting head section are sequentially carried out.

According to a twelfth aspect of the present invention, there is provided the component mounting method as claimed in the eleventh aspect, wherein the picking-up step of each of the first mounting head sections and the mounting step of each of the corresponding second mounting head sections are carried out at the same time, and the mounting step of each of the first mounting head sections and the picking-up step of each of the corresponding second mounting head sections are carried out at the same time.

According to a thirteenth aspect of the present invention, there is provided the component mounting equipment as claimed in the eleventh aspect, wherein the components to be mounted onto the single board are all

distributed into groups by type, and the components of the groups are accommodated in the component supply tables of the component mounting apparatuses as assigned thereto.

According to a fourteenth aspect of the present invention, there is provided the component mounting equipment as claimed in the twelfth aspect, wherein the components to be mounted onto the single board are all distributed into groups by type, and the components of the groups are accommodated in the component supply tables of the component mounting apparatuses as assigned thereto.

With the above arrangement, the component supply table is installed fixedly, and therefore, it becomes free of vibration regardless of the number of mounted component supply means which can be mounted thereon. The mounting head section is a robot type which sucks a plurality of components from the component supply table at one time and thereafter successively mounts the components to specified portions of the board. Therefore, even when the number of components to be mounted on a board increases, the component mounting operation speed can be remarkably increased further than in the conventional apparatus in which the component supply table is fed at a pitch with respect to the rotary type mounting head section.

Furthermore, components can be mounted by the two of the first and second mounting head sections onto the

board positioned in a single board mounting position, and therefore, the component mounting operation speed can be further increased.

With the above arrangement of the fifth and sixth aspects and the eleventh and twelfth aspects, by mounting different components on the component supply tables installed at each of the component mounting apparatuses, the component supply tables are inevitably arranged on both sides of the board transfer path along it even when the types and the number of components to be mounted onto the board increase. Therefore, the equipment does not dimensionally increase as a whole without expanding significantly in the direction of the board transfer path. Furthermore, the mounting head sections of the component mounting apparatuses operate at high speed and the component supply tables are fixedly installed, and therefore, the component mounting operation speed can be increased.

With the above arrangement of the thirteenth and fourteenth aspects, when the types of boards are increased, the equipment can cope with it only by replacing a specified one of the component supply tables installed at the respective component mounting apparatuses with a component supply table mounted with components of the required type.

BRIEF DESCRIPTION OF THE DRAWINGS

These and other objects and features of the present invention will become clear from the following description taken in conjunction with the preferred embodiments thereof with reference to the accompanying drawings, in which:

Fig. 1 is a schematic plan view schematically showing a component mounting equipment according to an embodiment of the present invention;

Fig. 2 is a perspective view of an embodiment of the component mounting apparatus of the present invention, the apparatus being a part of the above equipment;

Fig. 3 is a plan view of an operating mechanism section of the above apparatus;

Fig. 4 is a flow chart of the above apparatus;

Fig. 5 is a block diagram showing construction for performing the control operation of the apparatus;

Fig. 6 is a perspective view of a conventional component mounting apparatus; and

Fig. 7 is a schematic plan view of the above conventional apparatus.

DETAILED DESCRIPTION OF THE EMBODIMENTS

Before the description of the present invention proceeds, it is to be noted that like parts are designated by like reference numerals throughout the accompanying

drawings.

An embodiment of the present invention will be described below with reference to Figs. 1 through 4.

Fig. 1 is a schematic plan view schematically showing a component mounting equipment (component mounting line) according to an embodiment of the present invention. In the figure, four component mounting apparatuses 27A through 27D are provided along a board transfer path 21, and four board transfer means 22 are provided for the component mounting apparatuses 27A through 27D along the board transfer path 21 in the lateral direction so that each board transfer means 22 supplies a board to be mounted with components to a board mounting position of one of the component mounting apparatuses and discharges the board therefrom. The component mounting apparatuses 27A through 27D have an identical basic structure, and therefore, the component mounting apparatus 27D is taken as an example to be described below with reference to Fig. 2 that shows a perspective view of it and Fig. 3 that shows a plan view of its operating mechanism section.

In the component mounting apparatus 27D shown in Fig. 2, a laterally provided pair of inverted U-shaped support frames 29 are arranged in parallel to each other along the board transfer path 21 while allowing the board transfer path 21 to penetrate them. Between both the

support frames 29 are arranged two operating frames 30 in parallel to each other across the frames 29, and they are supported individually movably in a direction perpendicular to the board transfer path 21. To each operating frame 30 is mounted a mounting head section 31 movably along the operating frame 30. At the mounting head section 31, four component suction nozzles 33 are provided at regular intervals (at intervals of 90°) around a rotary member 32 that is rotatably supported around a horizontal axis. Upon rotating the rotary member 32 at a pitch equal to each interval of the component suction nozzles 33, the component suction nozzles 33 are selectively and sequentially directed downward to suck a component 34 from a component supply table 28A and mount the sucked component 34 onto a circuit board 37 located at the board mounting position where the board 37 is positioned by a board positioning section 24.

Between both the support frames 29 are inserted the component supply tables 28A from both depthwise sides as moved by casters 40, and thereafter they are fixedly installed in specified positions. The component supply table 28A is provided with component supply means 12 comprised of parts cassettes provided with the aforementioned reels 13. Other than this, as shown in Fig. 1, a component supply table 28B mounted with a stick-shaped

component supply means 38 at which components stored in a pipe member are successively fed to a take-out position, a component supply table 28C on which bulk components 39 are placed, and a tray-shaped component supply table 28D are installed at the component mounting apparatuses 27A through 27D. It is to be noted that the tray-shaped component supply table 28D is provided with a mounting head section 59 having a pivot arm shape for taking out the components thereof.

In Fig. 3, each operating frame 30 houses therein a head positioning mechanism section 41 for moving the mounting head section 31 in the lengthwise direction of the board transfer path 21.

The head positioning mechanism section 41 is comprised of a ball thread 43 that is rotatably supported across a pair of support plates 42 fixed to both ends of each operating frame 30, a step motor 47 for rotatively driving the ball thread 43 via a connecting means 44, and a moving member 49 in which a nut 48 meshed with the ball thread 43 is internally fixed and moved in accordance with the rotation of the ball thread 43. The mounting head section 31 is fixed to the moving member 49 via a head holder 50, and the head holder 50 is internally provided with a known head elevation mechanism section 51 for vertically moving the mounting head section 31.

Each of the support frames 29 houses therein a head feed mechanism section 52 for moving the head positioning mechanism section 41 via each operating frame 30 in a direction perpendicular to the board transfer path 21. The head feed mechanism section 52 is comprised of a ball thread 54 that is rotatably supported across a pair of support plates 53 fixed to both ends of each support frame 29, a step motor 56 for rotatively driving the ball thread 54 via a connecting means 55, a moving member 57 that is fixed to an end portion of each operating frame 30 as meshed with the ball thread 54 and operates to move the operating frame 30 in accordance with the rotation of the ball thread 54, and a guide shaft 58 that is fixed across the support plates 53 and operates to slidably support the operating frame 30 while allowing the guide shaft 58 to penetrate the other end of the operating frame 30. A controller 100 controls the operations of the apparatuses 27A-27D and the board transfer means 22, because it is connected to them as shown in Fig. 5 in which the connection structure of the apparatus 27B is shown as one example. The other connection structure of the apparatuses 27A, 27C, and 27D are similar to the apparatus 27B.

The operation of the aforementioned component mounting equipment will be described next with reference to a flowchart of Fig. 4. In the component mounting

apparatuses 27A through 27D, the mounting head sections 31 are controlled in accordance with a timing at which, while one mounting head section 31 is sucking components 34 from one of the component supply tables 28A through 28D, the other mounting head section 31 mounts the components 34 onto the circuit board 37. Since both the mounting head sections 31 execute an identical operation except for an operating timing shift, only the operation of one mounting head section 31 will be now described.

First, the mounting head section 31 is moved to a position just above the component 34 to be sucked by suction on one of the component supply tables 28A through 28D and then positioned (step S1). That is, upon rotating the step motor 47 of the head positioning mechanism section 41 by a specified angle in the required rotational direction, the moving member 49 moves in the lengthwise direction of the board transfer path 21 by the ball thread 43 that is rotating integrally with the step motor 47, and the mounting head section 31 is moved to a specified component take-out position on the one of the component supply tables 28A through 28D. In this stage, in regard to the other component supply tables 28A through 28C except for the tray-shaped component supply table 28D, the component take-out position is positioned in a straight line extending along the board transfer path 21.

Consequently, the mounting head section 31 does not move as positioned in the position until such components as the parts cassette or the stick fronting the mounting head section 31 deplete.

When the mounting head section 31 is positioned, the head elevation mechanism section 51 operates to move down the mounting head section 31, the component suction nozzle 33 sucks a component 34, and thereafter the mounting head section 31 is slightly moved up by the head elevation mechanism section 51 (step S2). Subsequently, the rotary member 32 of the mounting head section 31 is rotated by one pitch, and the next component suction nozzle 33 is made to front the component take-out position (step S3). In this stage, it is decided whether or not the mounting head section 31 has completed the suction of a specified number (four in this embodiment) of components 34 (step S4). When it has not been completed, the same operation as above will be repeated to suck the specified number of components 34.

When the suction of the specified number of components 34 has been completed, the step motor 56 of the head feed mechanism section 52 and the step motor 47 of the head positioning mechanism section 41 are simultaneously driven to move the mounting head section 31 onto the board positioning section 24 via the operating frame 30 in accordance with the rotation of the ball thread 54 and then

position it just above a specified component mounting position of the circuit board 37 by the head positioning mechanism section 41 (step S5). Then, the head elevation mechanism section 51 is driven to mount the components that have been held by the component suction nozzle 33 as sucked thereto onto the circuit board 37 (step S6). After the mounting head section 31 is slightly moved up by the head elevation mechanism section 51, the mounting head section 31 is moved to a position just above the next component mounting position of the circuit board 37 and then positioned by the operations of the head positioning mechanism section 41 and the head feed mechanism section 52, and the rotary member 32 is rotated by one pitch, so that the component to be mounted next is made to front the component mounting position (step S7).

In this stage, it is decided whether or not the mounting of all the components 34 that have been held by the mounting head section 31 as sucked thereto has been completed (step S8). When it has not been completed, the same operation as above will be repeated to mount all the components 34 onto the specified positions of the circuit board 37.

When the specified number of components has been completed at step S8, it is decided whether or not the mounting of all the components 34 distributed to the

component mounting apparatuses 27A through 27D for the circuit board 37 positioned in the board positioning section 24 has been completed (step S9). When it has not been completed, the mounting head sections 31 are moved again above the component supply tables 28A through 28D to repeat the suction of the components 34 from the component supply tables 28A through 28D and the mounting of the components 34 onto the circuit board 37 in a manner similar to the above until the mounting of all the components 34 onto the circuit board 37 will complete. When the mounting of all the components 34 onto the circuit board 37 is completed, each circuit board 37 positioned in the board transfer path 21 is fed by a specified pitch to be positioned in the board positioning sections 24 of the component mounting apparatuses 27A through 27D for the next process (step S10), and an operation similar to the above will be repeated.

In the above component mounting equipment, mutually different components can be mounted on the component supply tables 28A through 28D of the plurality (four in this embodiment) of component mounting apparatuses 27A through 27D provided in parallel to one another along the board transfer path 21. Therefore, when the types and the number of components 34 to be mounted onto the circuit board 37 increase, these components are mounted on the

component supply tables 28A through 28D as distributed into groups classified by type. With this arrangement, since the component supply tables 28A through 28D are mounted with only the components 34 of the respective groups, the tables are not dimensionally increased. Furthermore, since the component supply tables 28A through 28D are installed perpendicularly to the board transfer path 21 at the component mounting apparatuses 27A through 27D, the equipment is not dimensionally increased as a whole without significantly expanding in the direction of the board transfer path 21.

Furthermore, since the mounting head section 31 of the component mounting apparatuses 27A through 27D only operates and the component supply tables 28A through 28D are fixedly installed, the tables become free of vibration regardless of the number of mounted component supply means 12 and 38. Furthermore, the mounting head section 31 sucks at one time a plurality of components 34 from the component supply tables 28A through 28D and successively mounts the components 34 onto the specified portions of the circuit board 37. Furthermore, the component mounting apparatuses 27A through 27D are each provided with a pair of mounting head sections 31 and controls the mounting head sections 31 so that, while one is sucking components 34, the components 34 that are held by the other as sucked thereto are mounted

to the circuit board 37. With the above arrangement, even when the types and the number of components 34 to be mounted onto the circuit board 37 increase, the component mounting operation speed can be remarkably increased further than in the conventional apparatus in which the component supply table is fed at a pitch with respect to the rotary type mounting head section.

When the types of circuit boards 37 increase, it can be coped with only by replacing a part of the component supply tables 28A through 28D installed at the component mounting apparatuses 27A through 27D with component supply tables 28A through 28D mounted with required components 34. It is to be noted that the component mounting apparatuses 27A through 27D can be also used singly.

According to the present invention as described above, there is provided a robot type mounting head section in which the component supply tables are installed fixedly, and a plurality of components are sucked at one time from the component supply tables and thereafter transferred to be successively mounted onto the specified portions of the board. With this arrangement, even when the number of components to be mounted onto the board increases, the component mounting operation speed can be remarkably increased further than in the conventional structure in which the component supply table is fed at a pitch with

respect to the rotary type mounting head section. Furthermore, since the laterally provided pair of first and second mounting head sections are mutually controlled in operation in accordance with a timing at which, when one is located on the component supply table, the other is located on the board positioning section. With this arrangement, components can be mounted onto single board by a plurality of mounting head sections, and therefore, the component mounting operation speed can be further increased.

Furthermore, according to the component mounting equipment of the present invention, by mounting mutually different components onto the component supply tables of the component mounting apparatuses arranged in parallel to one another, even when the types and the number of components to be mounted onto the circuit board increase, the equipment is not dimensionally increased as a whole without significantly expanding in the direction of the board transfer path. Furthermore, the component mounting operation speed can be further increased. In this case, there may be provided the structure in which all the components to be mounted onto single board are distributed into groups by type and the components of each group are mounted on component supply tables as assigned to them installed at the respective component mounting apparatuses. With this arrangement, when the types of boards increase,

it can be coped with only by replacing a part of the component supply tables of the component mounting apparatuses with component supply tables mounted with the required components.

Although the present invention has been fully described in connection with the preferred embodiments thereof with reference to the accompanying drawings, it is to be noted that various changes and modifications are apparent to those skilled in the art. Such changes and modifications are to be understood as included within the scope of the present invention as defined by the appended claims unless they depart therefrom.

CLAIMS

1. A component mounting apparatus comprising:

a pair of component supply tables (28A-28D) on which components (34) are accommodated and which are arranged on both sides of a board mounting position where a board (37) is positioned;

a first mounting head section (31,59) for successively picking up the components at one of the component supply tables and thereafter successively mounting the picked-up components onto the board; and

a second mounting head section (31,59) for successively picking up the components at the other of the component supply tables and thereafter successively mounting the picked-up components onto the board,

wherein the first and second mounting head sections are independently operated.

2. The component mounting apparatus as claimed in claim 1, wherein the first and second mounting head sections are controlled mutually in operation in accordance with a timing at which, when one of them carries out a component picking-up operation for picking up the components from the component supply table, the other of them carries out a component mounting operation for mounting the picked-up components onto the board.

3. The component mounting apparatus as claimed in

claim 1, wherein one of the first and second mounting head section has component suction nozzles (33) sucking the components at one time.

4. The component mounting apparatus as claimed in claim 2, wherein one of the first and second mounting head section has component suction nozzles (33) sucking the components at one time.

5. A component mounting equipment comprising:

a plurality of component mounting apparatuses each of which is claimed in Claim 1,

wherein a board transfer path (21) along which the board is supplied to the board mounting position of the apparatus and discharged from the board mounting position of the apparatus by a board transfer device (22) is provided so that the board transfer path connects the board mounting positions of the component mounting apparatuses, and the component supply tables of the component mounting apparatuses are arranged on both sides of the board mounting positions in the board transfer path.

6. A component mounting equipment comprising:

a plurality of component mounting apparatuses each of which is claimed in Claim 2,

wherein a board transfer path (21) along which the board is supplied to the board mounting position of the apparatus and discharged from the board mounting position

of the apparatus by a board transfer device (22) is provided so that the board transfer path connects the board mounting positions of the component mounting apparatuses, and the component supply tables of the component mounting apparatuses are arranged on both sides of the board mounting positions in the board transfer path.

7. The component mounting equipment as claimed in Claim 5, wherein the components to be mounted onto the single board are all distributed into groups by type, and the components of the groups are accommodated in the component supply tables of the component mounting apparatuses as assigned thereto.

8. The component mounting equipment as claimed in Claim 6, wherein the components to be mounted onto the single board are all distributed into groups by type, and the components of the groups are accommodated in the component supply tables of the component mounting apparatuses as assigned thereto.

9. A component mounting method comprising steps of:

picking up by a first mounting head section (31,59) components (34) from one of a pair of component supply tables (28A-28D) on which the components (34) are accommodated and which are arranged on both sides of a board mounting position where a board (37) is positioned, the first mounting head section (31,59) successively

13. The component mounting equipment as claimed in Claim 11, wherein the components to be mounted onto the single board are all distributed into groups by type, and the components of the groups are accommodated in the component supply tables of the component mounting apparatuses as assigned thereto.

14. The component mounting equipment as claimed in Claim 12, wherein the components to be mounted onto the single board are all distributed into groups by type, and the components of the groups are accommodated in the component supply tables of the component mounting apparatuses as assigned thereto.

Fig. 1

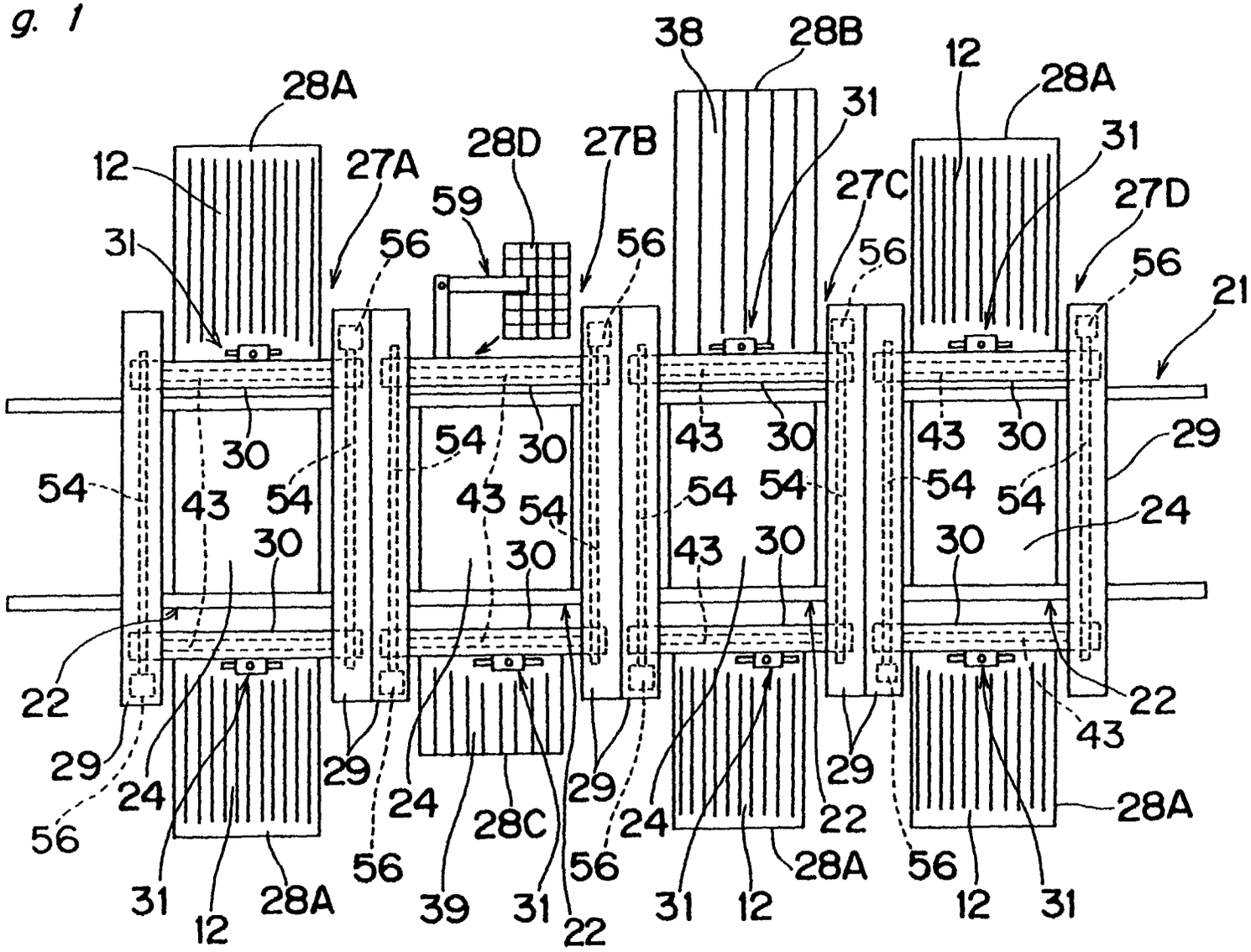

38
28B
12
28A
31
28A
12
27A
28D
27B
31
27C
27D
59
56
56
56
56
21
30
54
30
43
30
43
30
29
54
43
54
43
54
54
54
54
54
24
30
30
43
30
30
22
22
43
29
29
29
29
24
24
24
24
28A
56
28C
56
56
56
31
12
28A
39
31
22
31
12
28A
12
31

Fig. 2

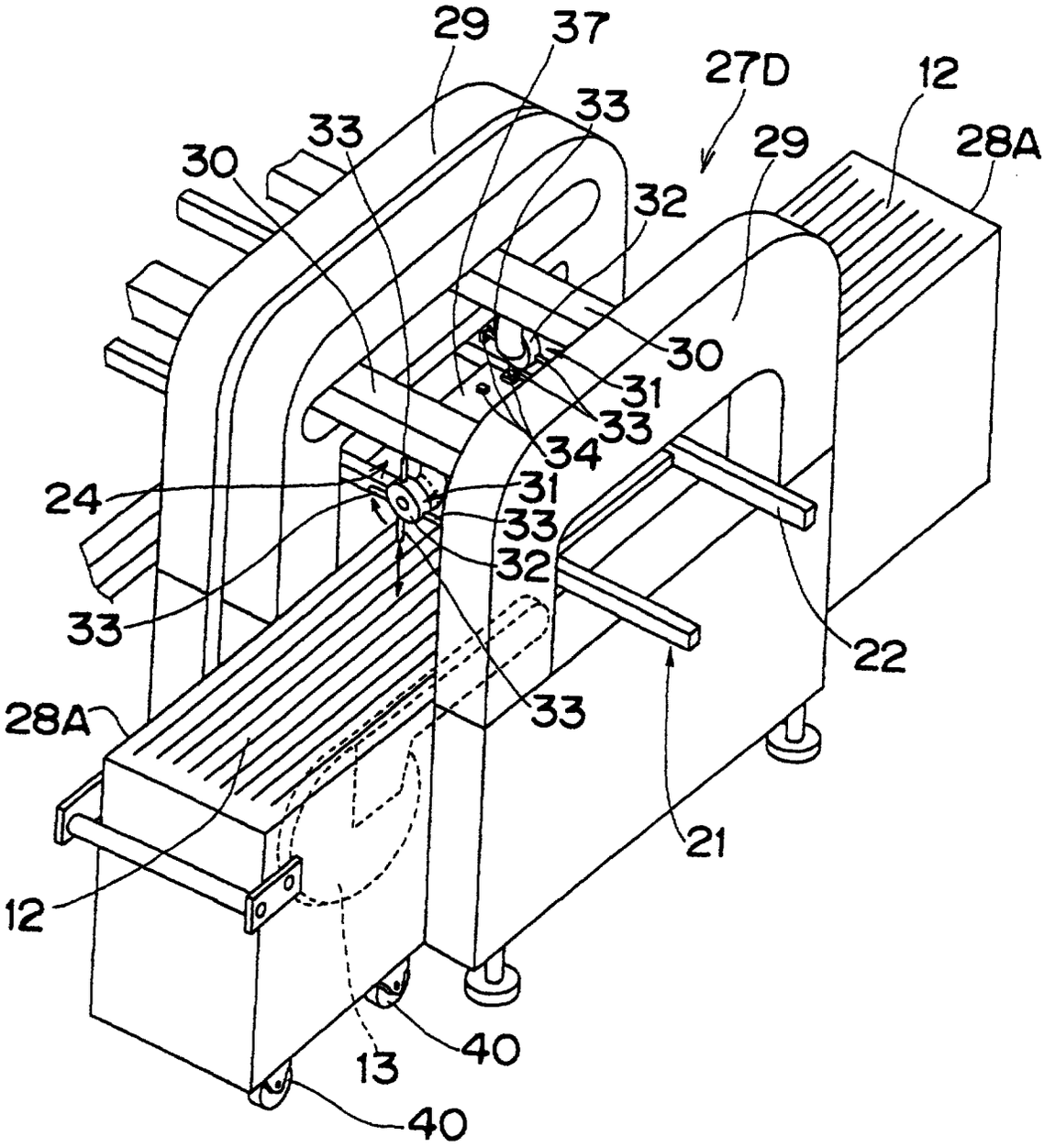
29
37
27D
12
33
33
29
28A
30
32
30
31
33
34
24
31
33
32
33
22
33
28A
21
12
40
13
40

Fig. 3

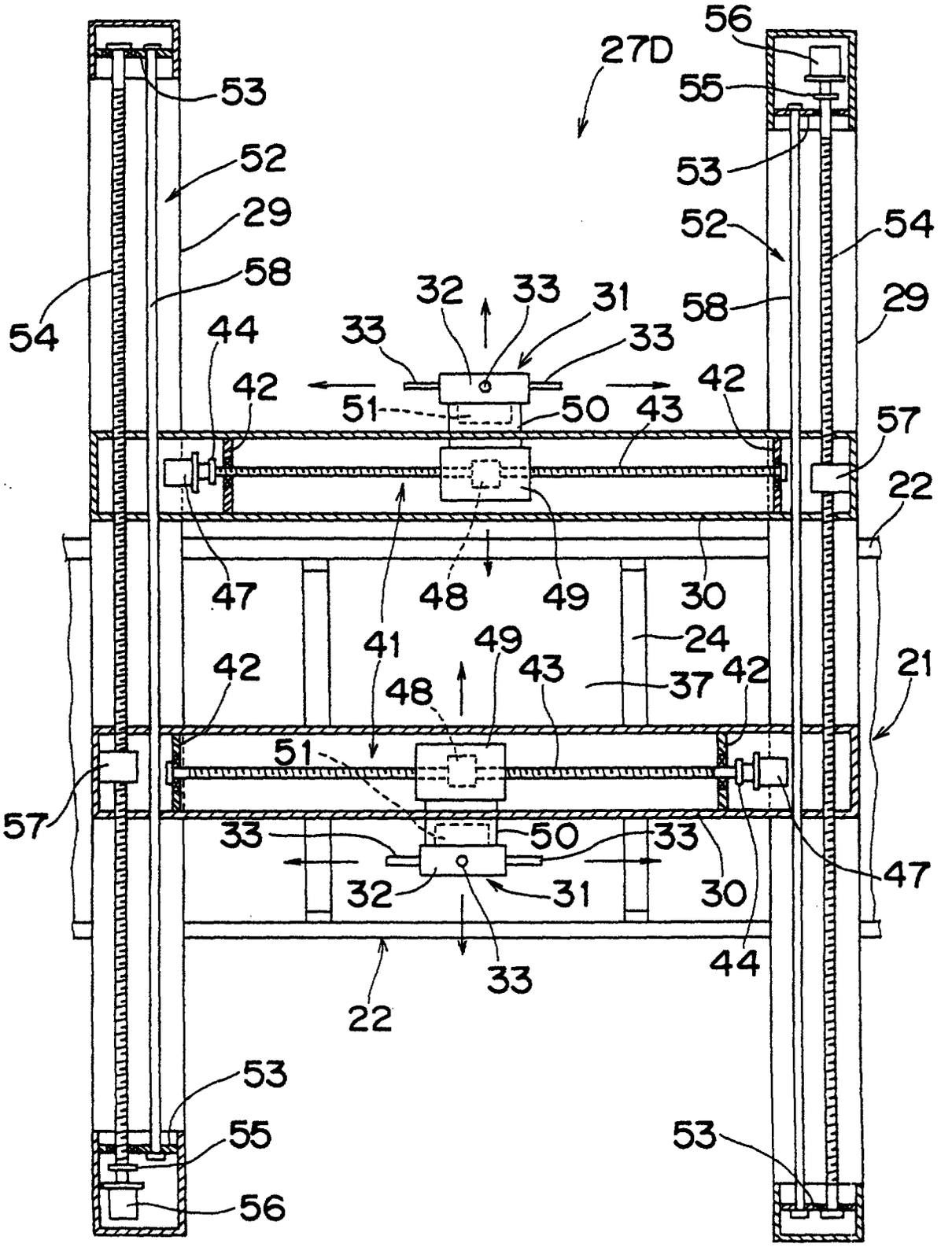
27D
56
55
53
52
29
58
54
32
33
31
44
42
51
50
43
57
22
47
48
49
30
24
41
37
21

Fig.4

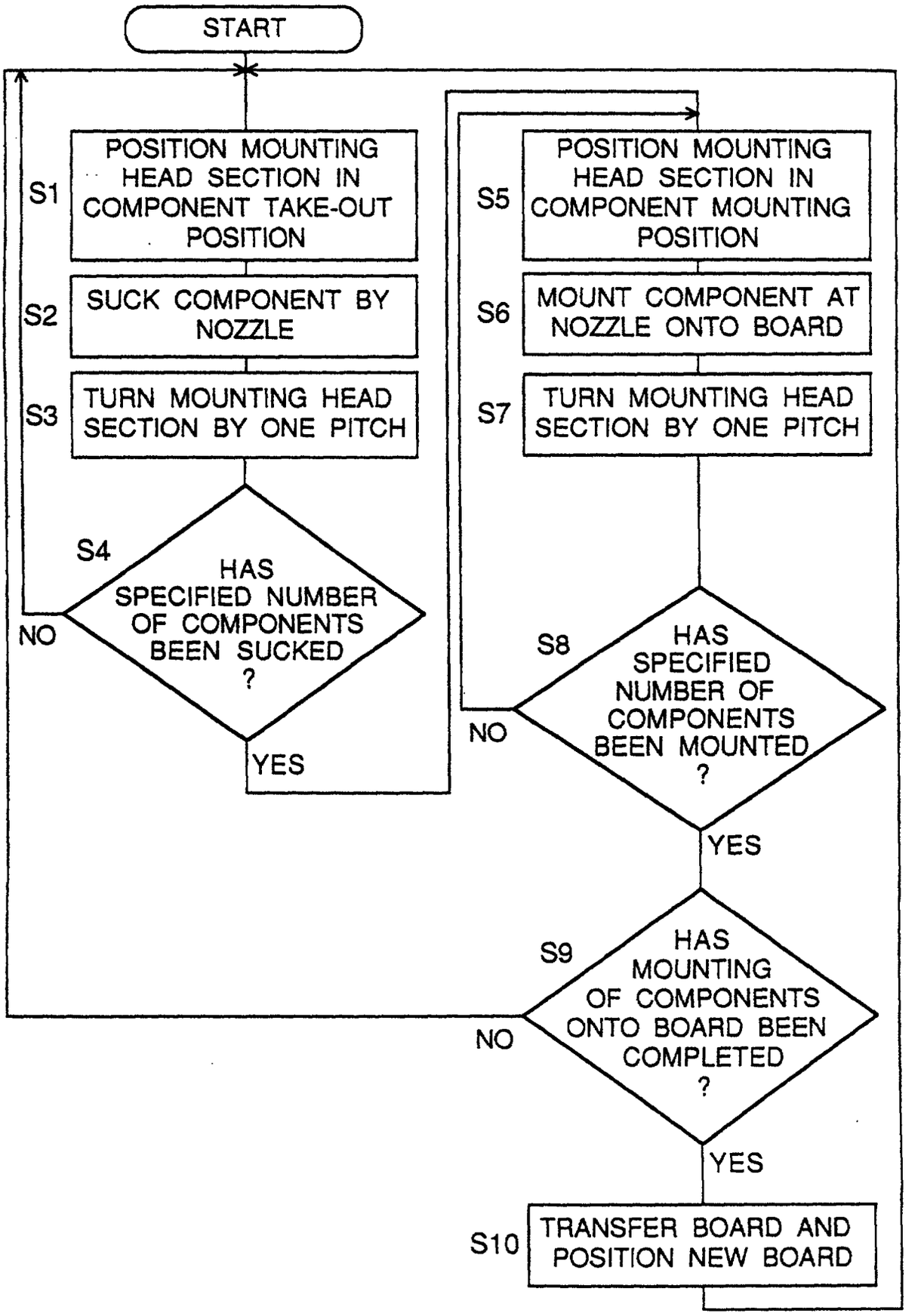
START
S1
POSITION MOUNTING HEAD SECTION IN COMPONENT TAKE-OUT POSITION
S2
SUCK COMPONENT BY NOZZLE
S3
TURN MOUNTING HEAD SECTION BY ONE PITCH
S4
HAS SPECIFIED NUMBER OF COMPONENTS BEEN SUCKED ?
NO
YES
S5
POSITION MOUNTING HEAD SECTION IN COMPONENT MOUNTING POSITION
S6
MOUNT COMPONENT AT NOZZLE ONTO BOARD
S7
TURN MOUNTING HEAD SECTION BY ONE PITCH
S8
HAS SPECIFIED NUMBER OF COMPONENTS BEEN MOUNTED ?
NO
YES
S9
HAS MOUNTING OF COMPONENTS ONTO BOARD BEEN COMPLETED ?
NO
YES
S10
TRANSFER BOARD AND POSITION NEW BOARD

*Fig.5*

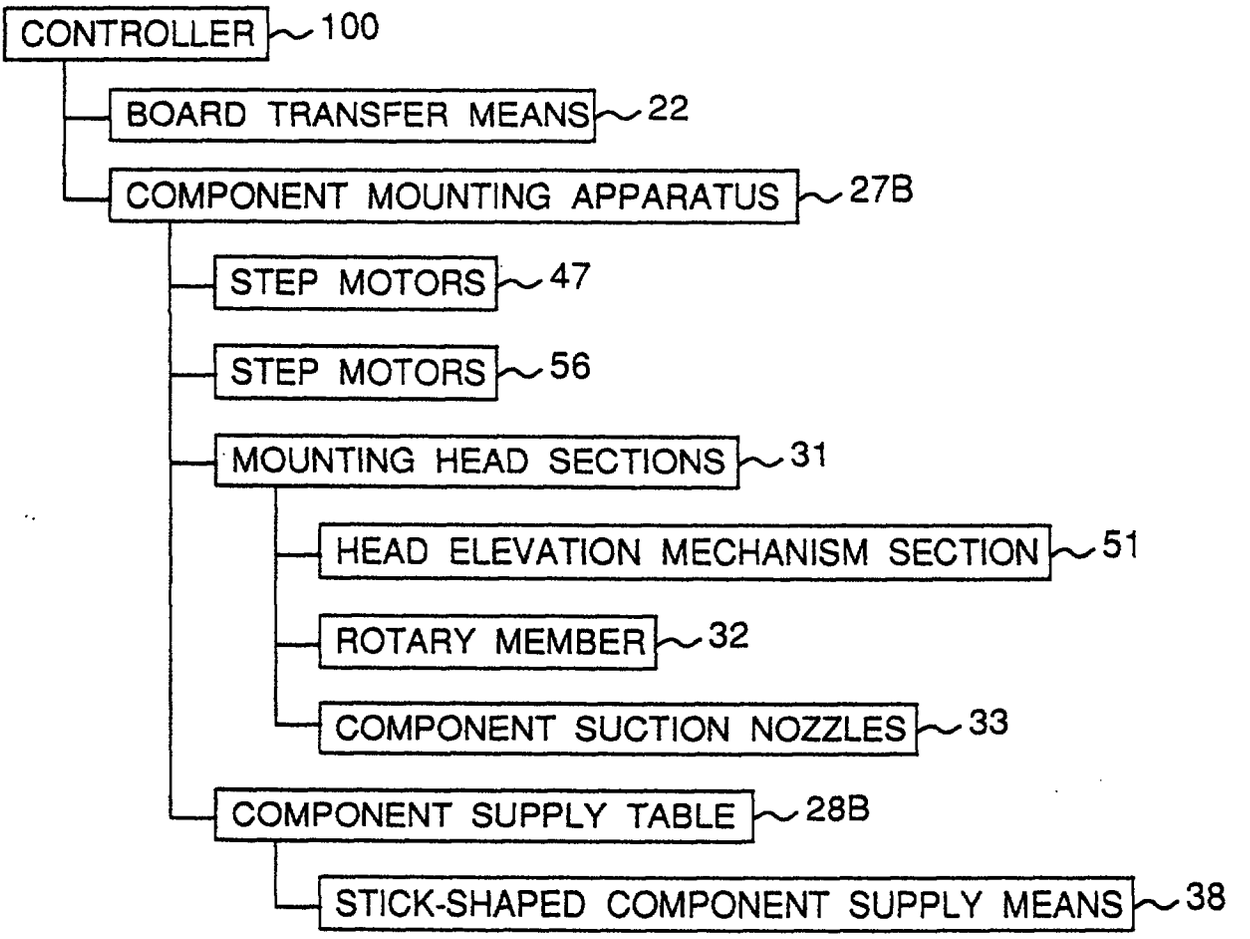
CONTROLLER
100
BOARD TRANSFER MEANS
22
COMPONENT MOUNTING APPARATUS
27B
STEP MOTORS
47
STEP MOTORS
56
MOUNTING HEAD SECTIONS
31
HEAD ELEVATION MECHANISM SECTION
51
ROTARY MEMBER
32
COMPONENT SUCTION NOZZLES
33
COMPONENT SUPPLY TABLE
28B
STICK-SHAPED COMPONENT SUPPLY MEANS
38

Fig. 6 PRIOR ART

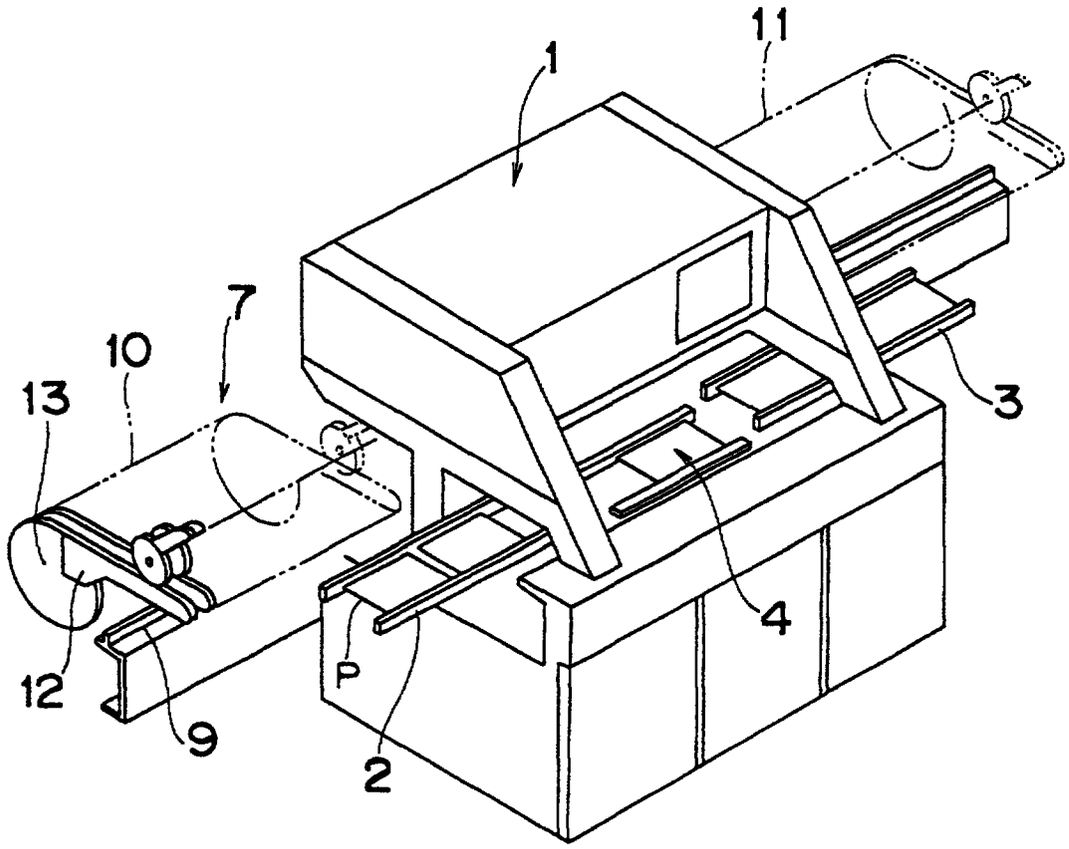

Fig. 7 PRIOR ART

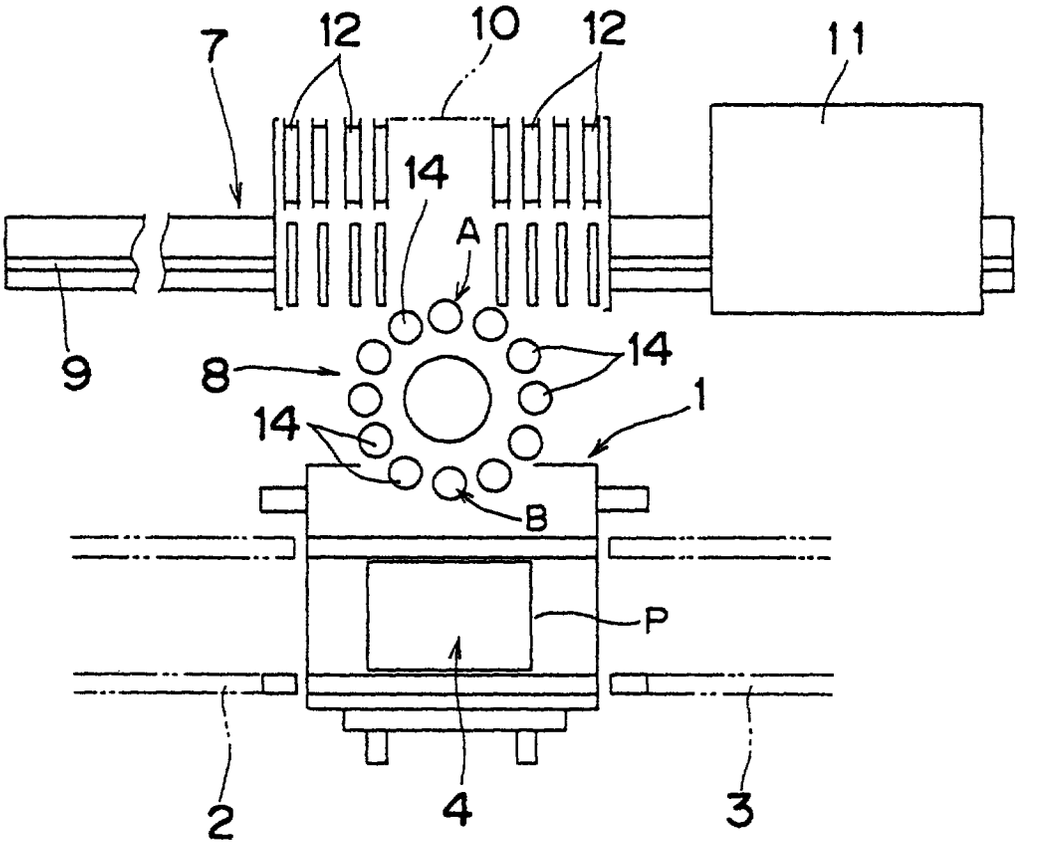

ABSTRACT OF THE DISCLOSURE

TITLE OF THE INVENTION

COMPONENT MOUNTING APPARATUS AND METHOD, AND COMPONENT MOUNTING EQUIPMENT

There is provided a plurality of component mounting apparatuses for sucking a plurality of components by a mounting head section and successively mounting the components onto a board located at a board positioning section. By arranging the component mounting apparatuses in parallel to one another, and a board transfer path is provided so that it penetrates the component mounting apparatuses. Even when the number of components to be mounted onto the board increases, the components are mounted on the component supply tables of the component mounting apparatuses as distributed thereto, and therefore, the whole apparatus is not dimensionally increased. The component supply tables are fixedly installed to become free of vibration, and the mounting head section executes the suction and the mounting of the plurality of components. Therefore, the component mounting operation speed can be remarkably increased.

(Figure 1)

This Sheet Has Been Replaced

SEARCH REPORT

Application No. **9611033-3**

**EXT OF THE ABSTRACT**

COMPONENT MOUNTING APPARATUS AND METHOD, AND COMPONENT MOUNTING EQUIPMENT

There is provided a plurality of component mounting apparatuses (27A, 27B, 27C, 27D) for sucking a plurality of components by mounting head section and successively mounting the components onto a board located at a board positioning section. By arranging the component mounting apparatuses in parallel to one another, and a board transfer path (21) is provided so that it penetrates the component mounting apparatuses (27). Even when the number of components to be mounted onto the board increases, the components are mounted on the component supply tables of the component mounting apparatuses (27) as distributed thereto, and therefore, the whole apparatus is not dimensionally increased. The component supply tables (28) are fixedly installed to become free of vibration, and the mounting head section (31) executes the suction and the mounting of the plurality of components. Therefore, the component mounting operation speed can be remarkable increased.

Fig. 1

REPLACEMENT SHEET

29 FEB 2000

REPLACEMENT SHEETS SG
☐ Description : paged ..... to paged .....
☑ Claim(s) : paged 32 to paged 32
☐ Drawing(s) : paged ..... to paged .....
☐ Abstract : paged ..... to paged .....
DATE OF ENTRY 10/6/24
[NEW CLAIMS FOR AMENDMENT]



15. A component mounting apparatus comprising:

a pair of component supply tables (28A-28D) for accommodating a plurality of components (34), said component supply tables being arranged on opposite sides of a board mounting position;

a first mounting head section (31) having a rotary member (32) rotatably supported around a horizontal axis, the first mounting head section successively picking up the plural components at one of the component supply tables while the rotating member is rotated and stopped, thereafter moving to a board positioned at the board mounting position, and thereafter successively mounting the plural picked-up components onto the board while moving in first and second directions which are perpendicular to each other and while the rotating member is rotated and stopped,

wherein the first direction is perpendicular to a direction in which the board is transferred, and the second direction is located along the board transfer direction,

a second mounting head section (31,59) for successively picking up the plural components at the other of the component supply tables, thereafter moving to the board positioned at the board mounting position, and thereafter successively mounting the plural picked-up components onto the board while moving in third and fourth directions which are perpendicular to each other,

This is the replacement sheet

Date: 10 JUN 2000

wherein the third direction is parallel to the first direction, and the fourth direction is parallel to the second direction but is not necessarily the same as the second direction,

wherein each of the first and second mounting head sections is independently movable between the component supply table and the board.

16. A component mounting apparatus comprising:

a pair of component supply tables (28A-28D) for accommodating a plurality of components (34), said component supply tables being arranged on opposite sides of a board mounting position, the component supply tables (28A) being inserted between support frames (29) from both depthwise sides as moved by casters (40), and thereafter the component supply tables are fixedly installed in specified positions;

a first mounting head section (31) for successively picking up the plural components at one of the component supply tables, thereafter moving to a board positioned at the board mounting position, and thereafter successively mounting the plural picked-up components onto the board while moving in first and second directions which are perpendicular to each other,

wherein the first direction is perpendicular to a direction in which the board is transferred, and the second direction is located along the board transfer direction,

a second mounting head section (31,59) for

This is the replacement sheet

Date: 10 JUN 2000

successively picking up the plural components at the other of the component supply tables, thereafter moving to the board positioned at the board mounting position, and thereafter successively mounting the plural picked-up components onto the board while moving in third and fourth directions which are perpendicular to each other,

wherein the third direction is parallel to the first direction, and the fourth direction is parallel to the second direction but is not necessarily the same as the second direction,

wherein each of the first and second mounting head sections is independently movable between the component supply table and the board.

This is the replacement sheet

Date: 10 JUN 2000