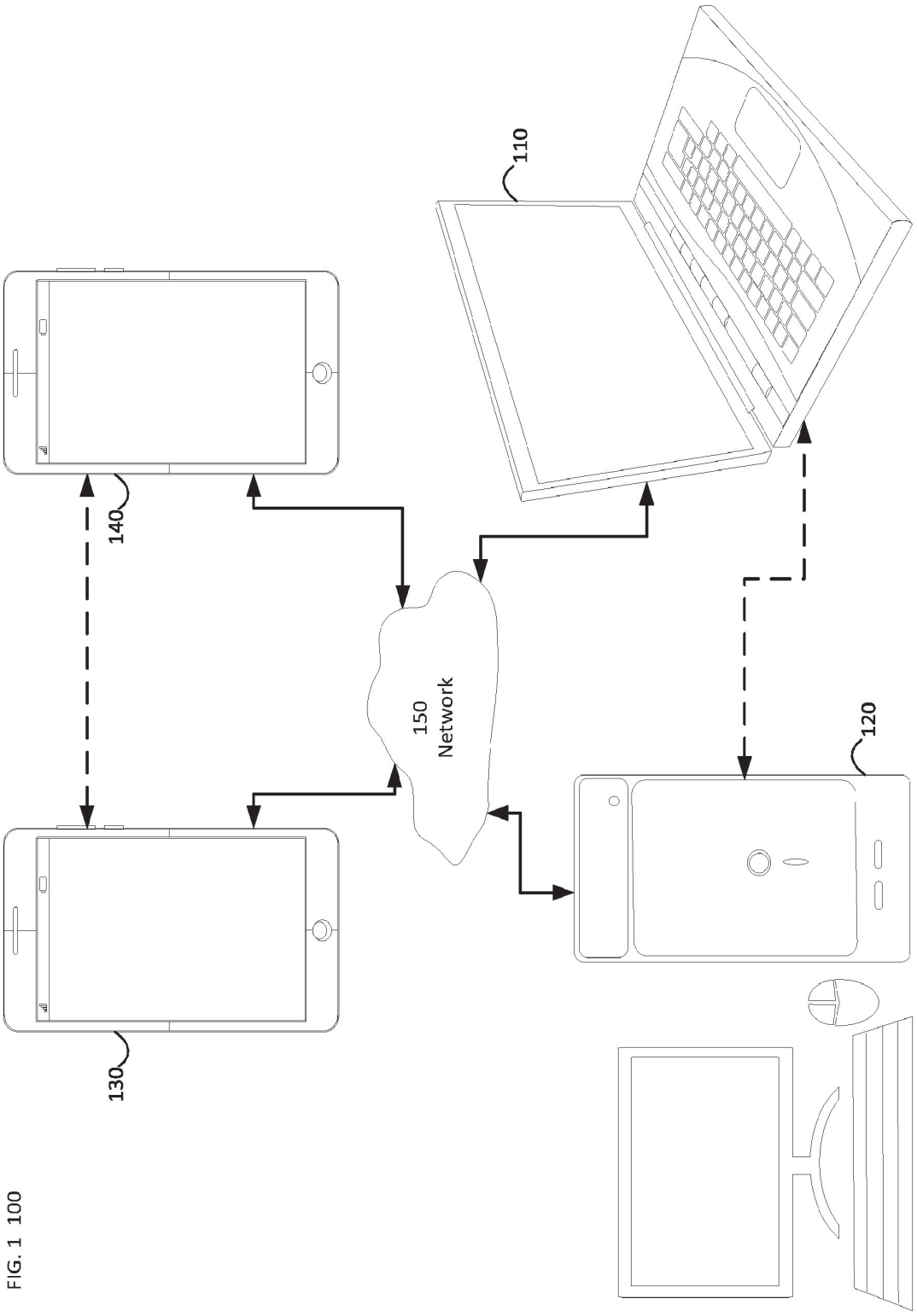

FIG. 1 100

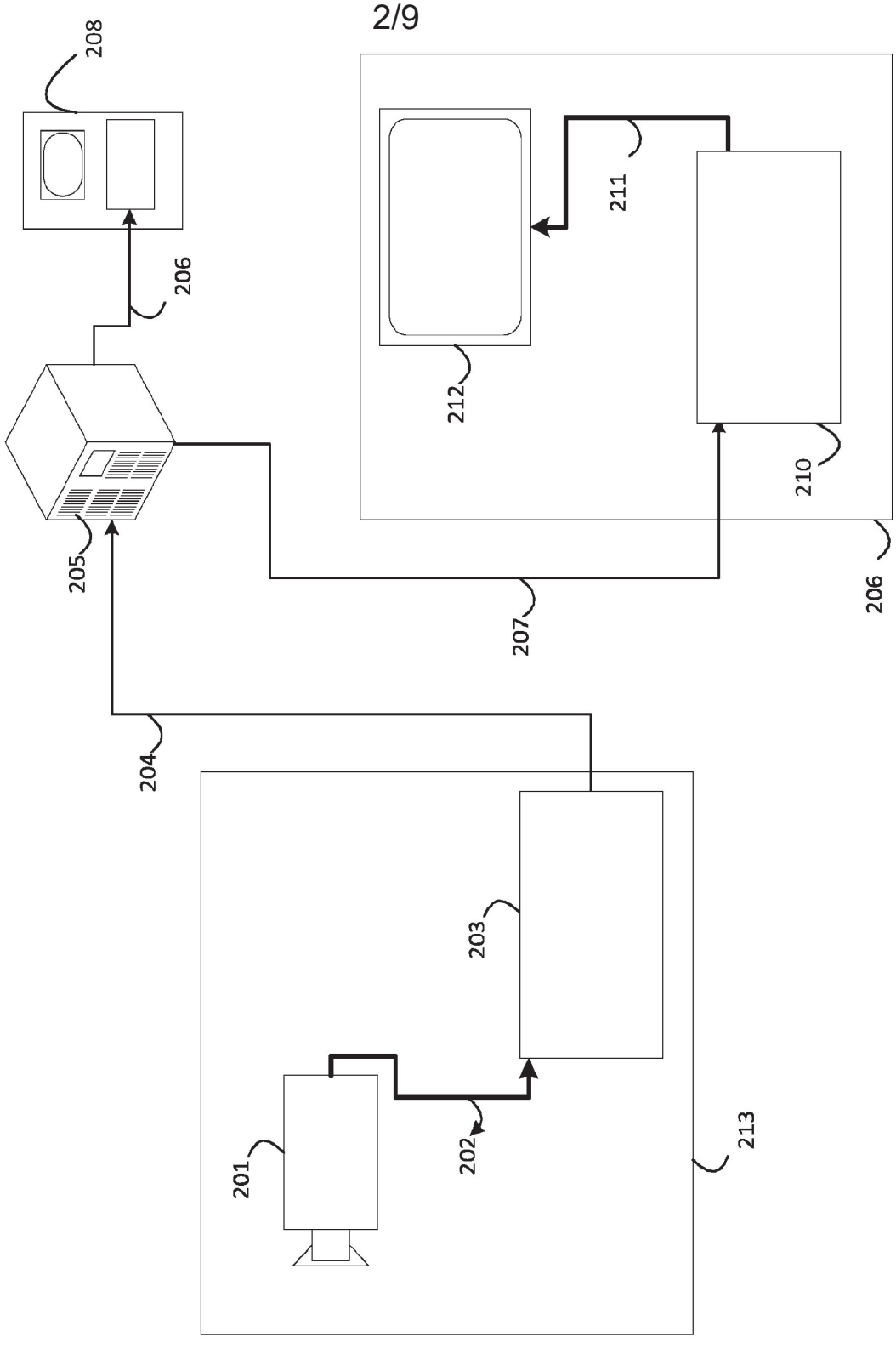

FIG. 2

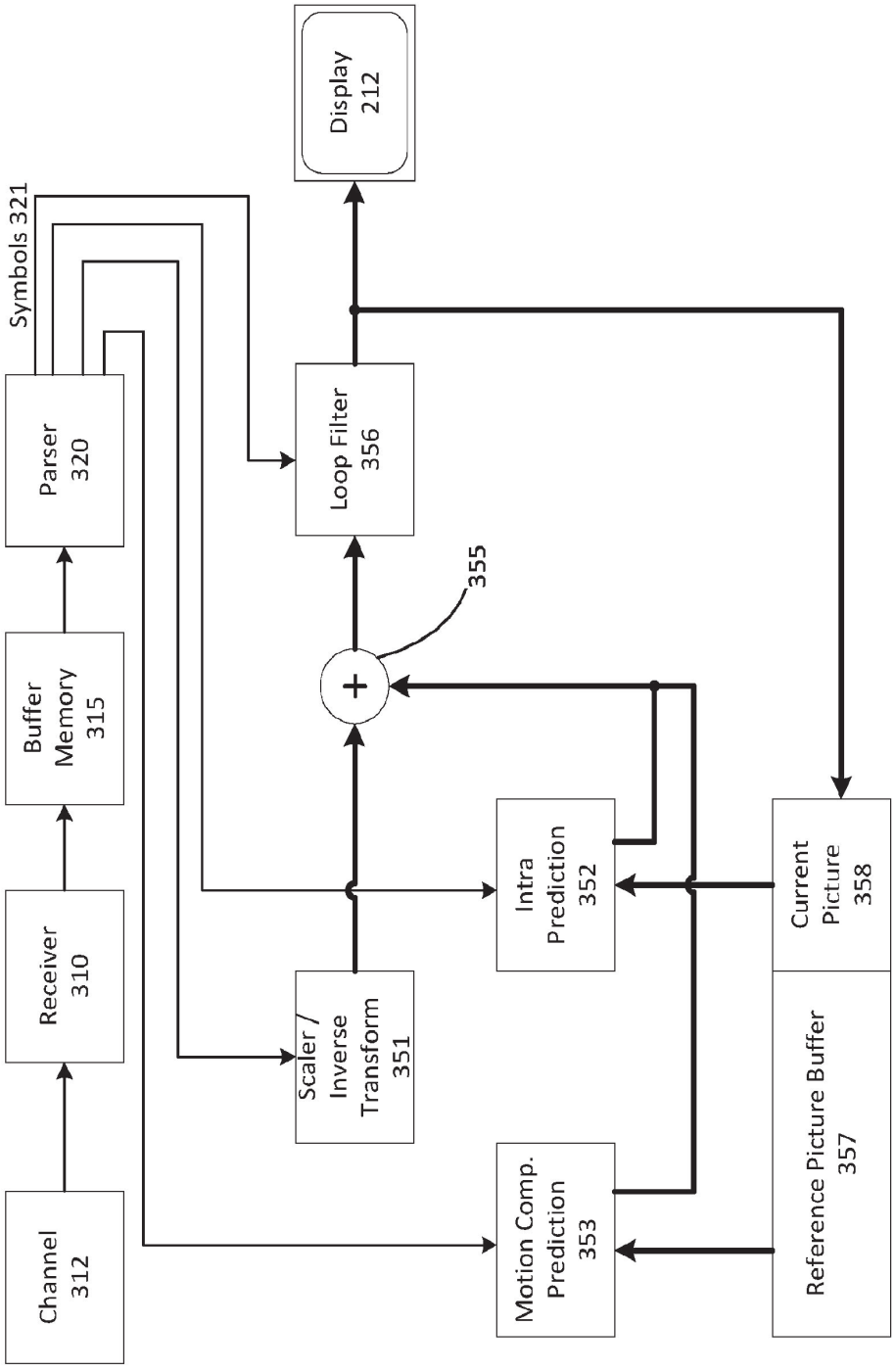

FIG. 3 Decoder 210

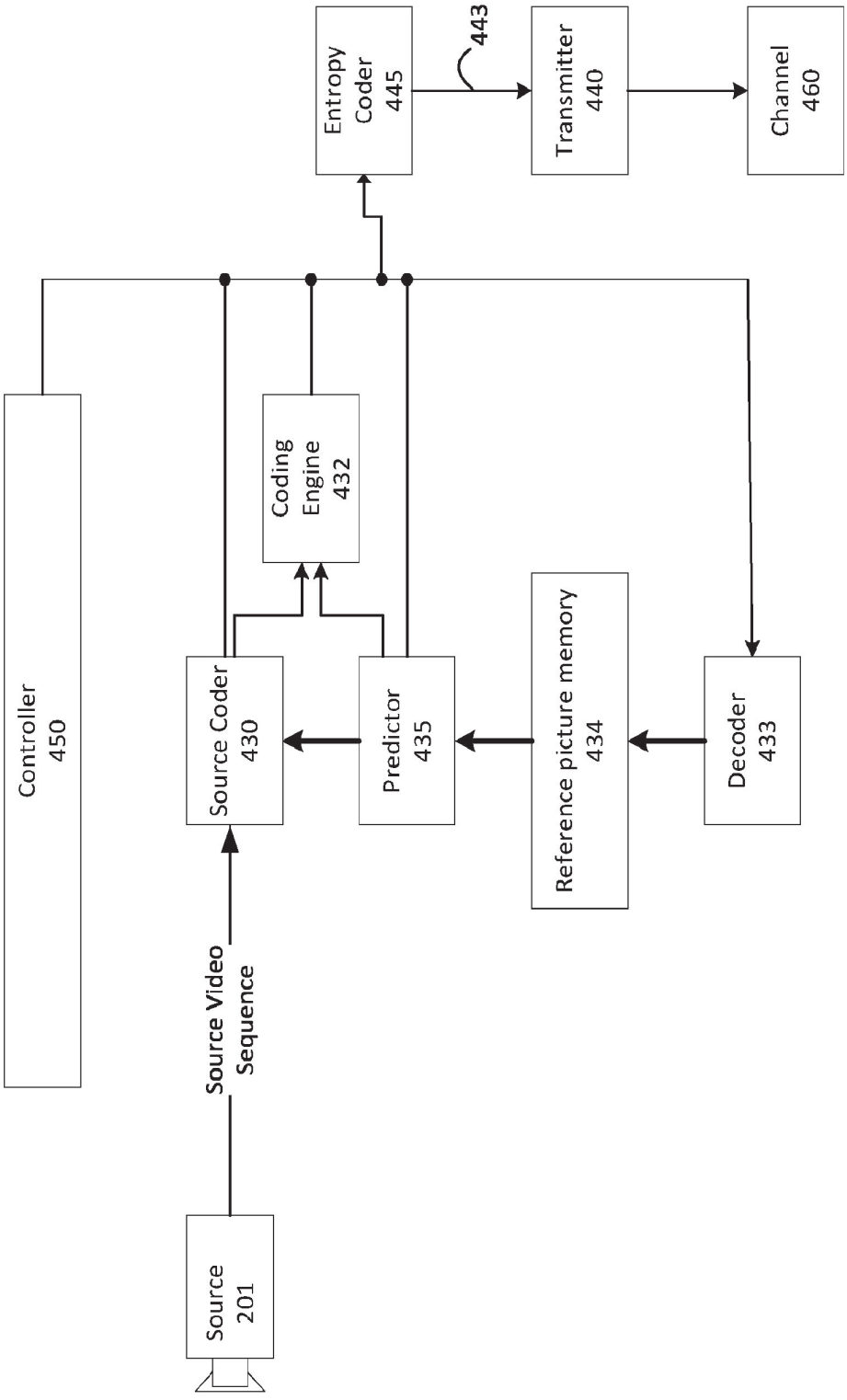

FIG. 4 Encoder 203

FIG. 5

pic_parameter_set_rbsp( ) {	Descriptor
...	
all_pic_coding_info_present_in_ph_flag	u(1)
if(all_pic_coding_info_present_in_ph_flag) {	
rpl_info_in_ph_flag	u(1)
if(deblocking_filter_override_enabled_flag)	
dbf_info_in_ph_flag	u(1)
sao_info_in_ph_flag	u(1)
alf_info_in_ph_flag	u(1)
if((pps_weighted_pred_flag || pps_weighted_bipred_flag) && rpl_info_in_ph_flag)	
wp_info_in_ph_flag	u(1)
qp_delta_info_in_ph_flag	u(1)
}	
...	
}	

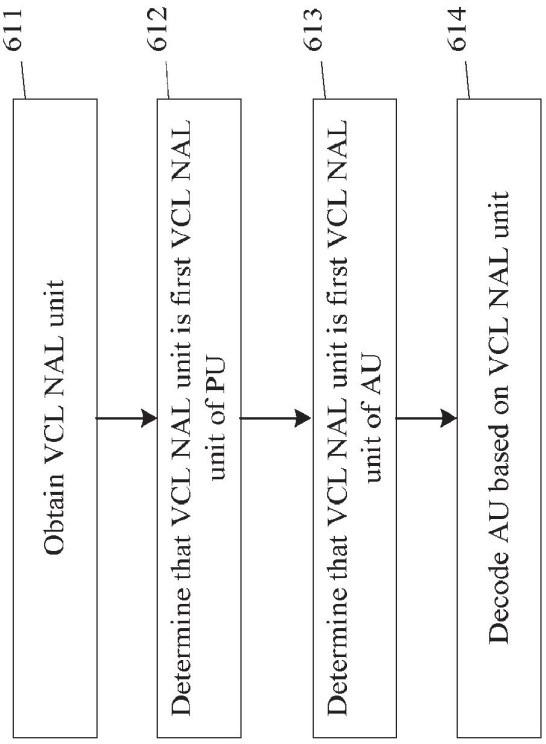
611
Obtain VCL NAL unit
612
Determine that VCL NAL unit is first VCL NAL unit of PU
613
Determine that VCL NAL unit is first VCL NAL unit of AU
614
Decode AU based on VCL NAL unit

FIG. 6A 600A

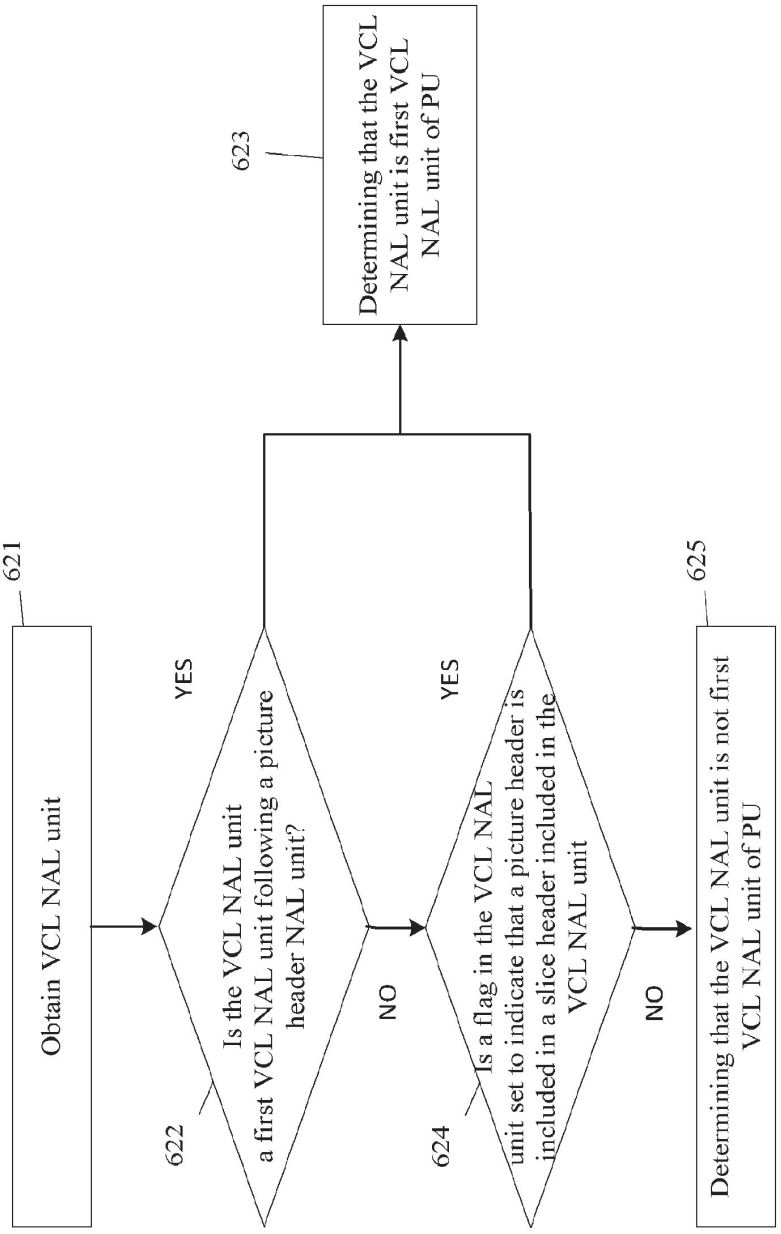
621
Obtain VCL NAL unit
622
Is the VCL NAL unit a first VCL NAL unit following a picture header NAL unit?
YES
623
Determining that the VCL NAL unit is first VCL NAL unit of PU
NO
624
Is a flag in the VCL NAL unit set to indicate that a picture header is included in a slice header included in the VCL NAL unit
YES
NO
625
Determining that the VCL NAL unit is not first VCL NAL unit of PU

FIG. 6B 600B

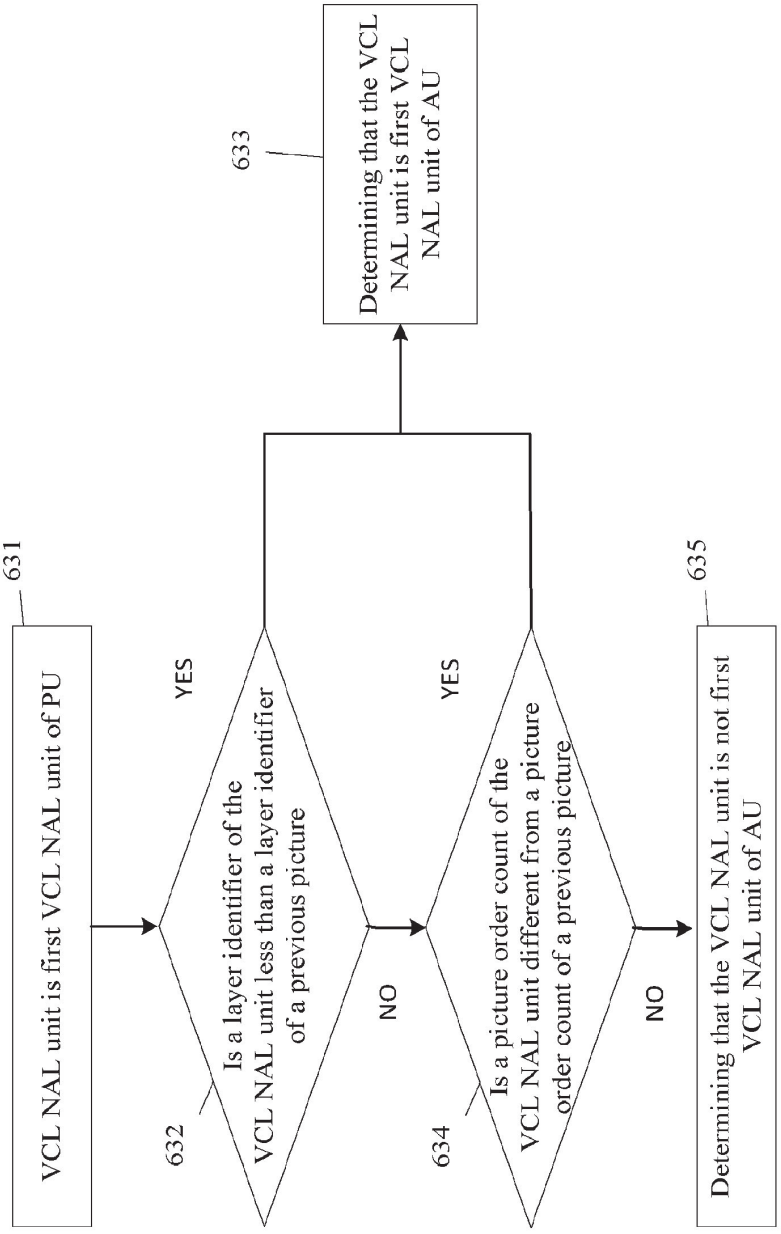
631
VCL NAL unit is first VCL NAL unit of PU
632
Is a layer identifier of the VCL NAL unit less than a layer identifier of a previous picture
YES
633
Determining that the VCL NAL unit is first VCL NAL unit of AU
NO
634
Is a picture order count of the VCL NAL unit different from a picture order count of a previous picture
YES
NO
635
Determining that the VCL NAL unit is not first VCL NAL unit of AU

FIG. 6C 600C

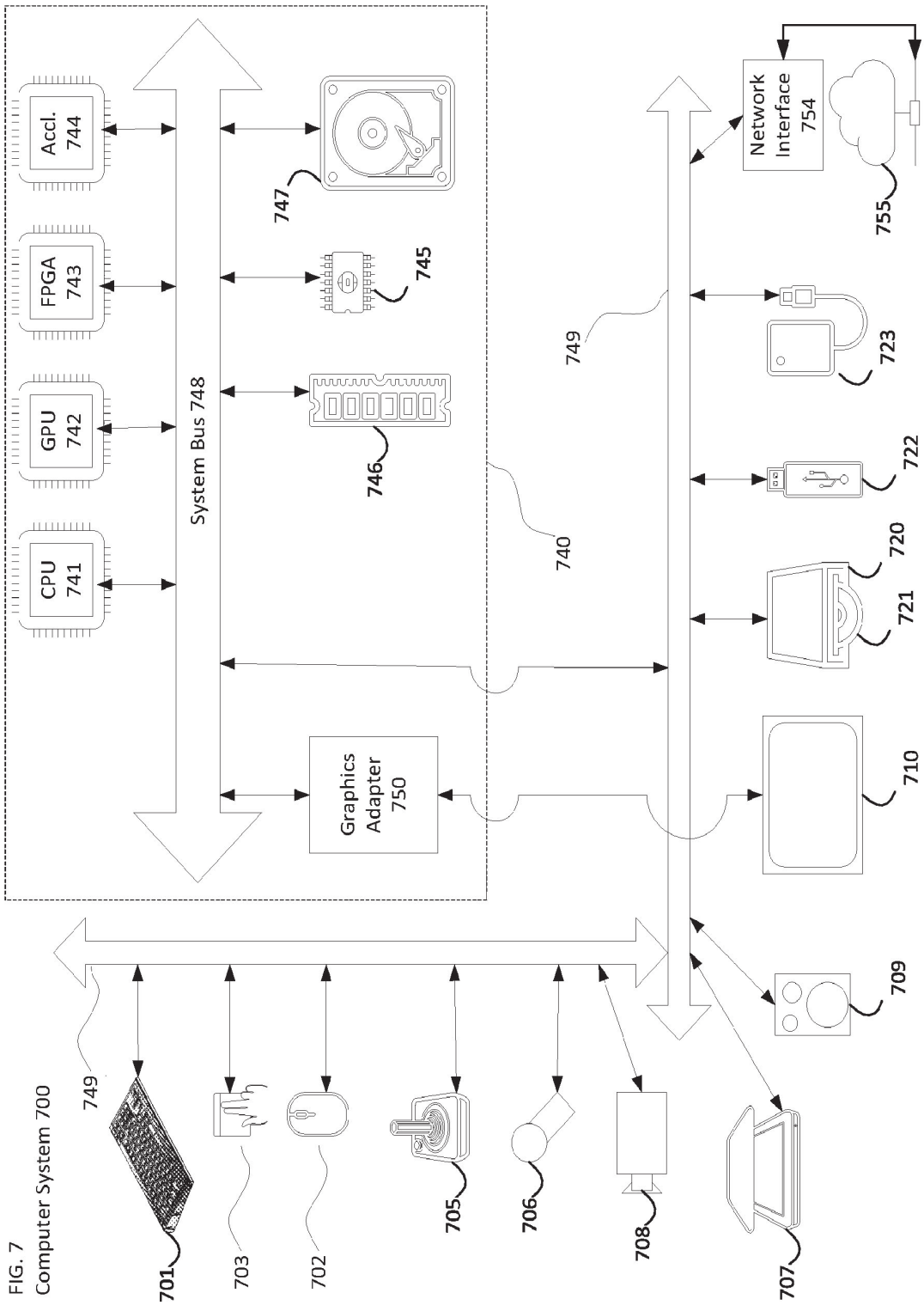
Computer System 700
CPU 741
GPU 742
FPGA 743
Accl. 744
System Bus 748
Graphics Adapter 750
740
746
745
747
749
Network Interface 754
755
723
722
720
721
710
709
707
708
706
705
701
703
702

FIG. 7