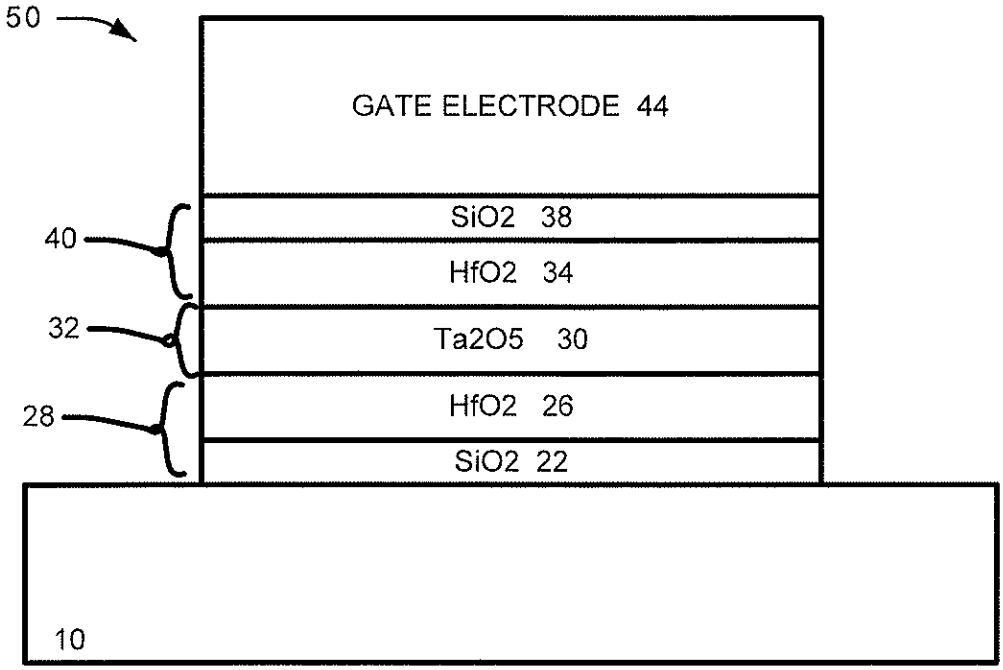

FIGURE 1

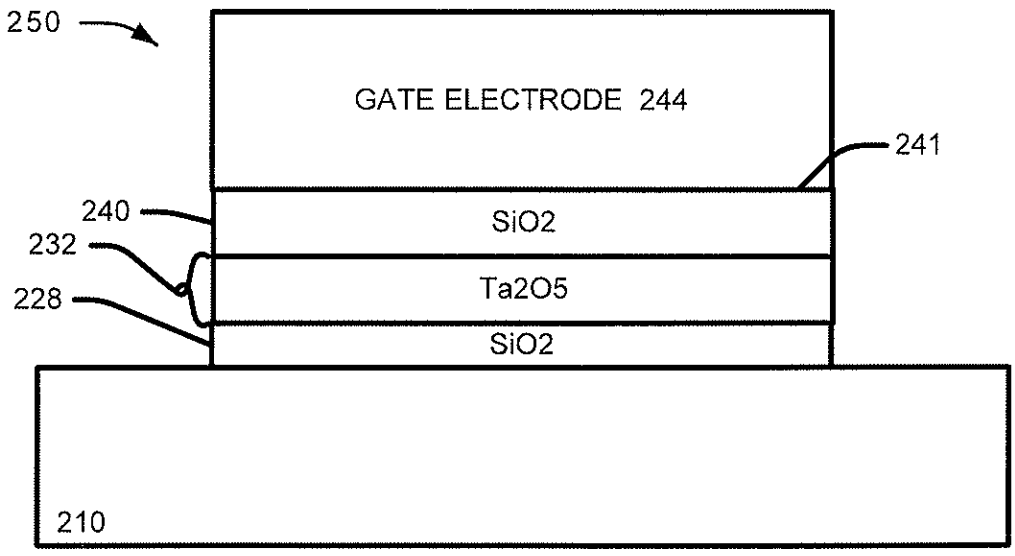

FIGURE 2

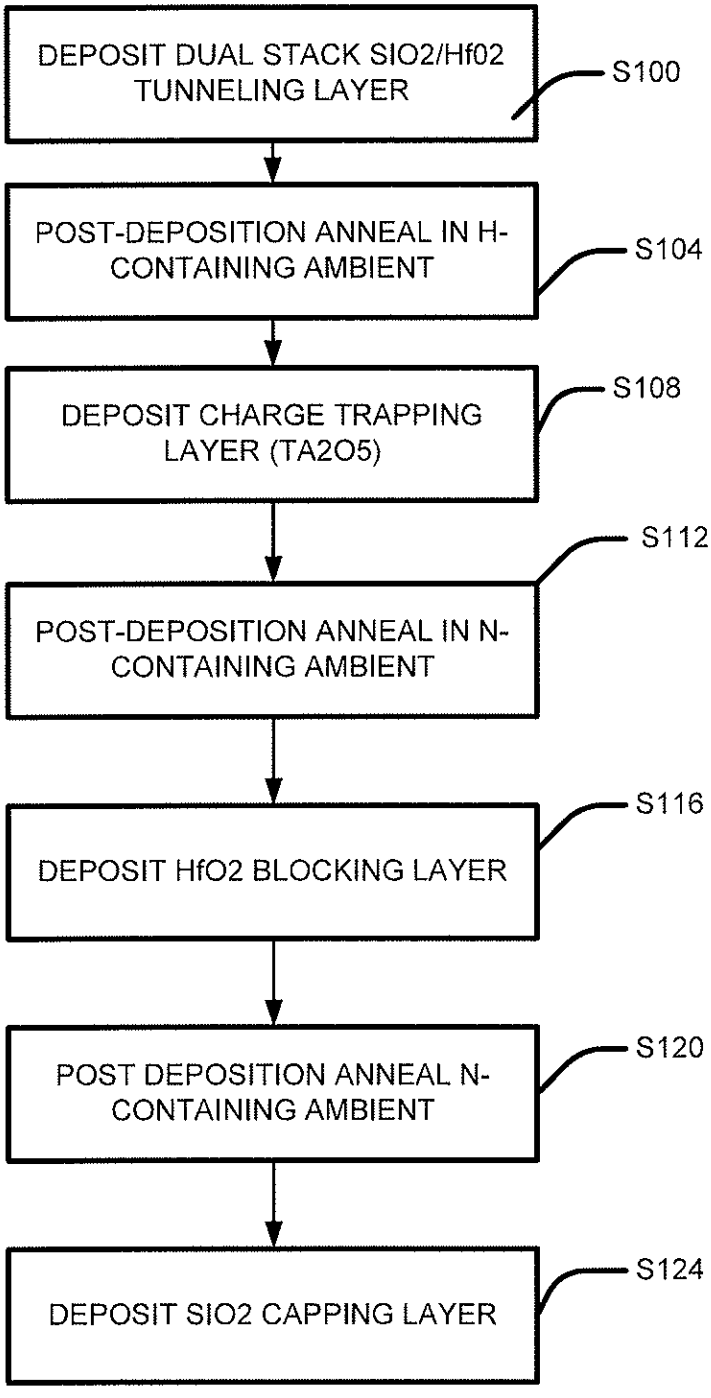
DEPOSIT DUAL STACK SIO2/Hf02 TUNNELING LAYER
S100
POST-DEPOSITION ANNEAL IN H-CONTAINING AMBIENT
S104
DEPOSIT CHARGE TRAPPING LAYER (TA2O5)
S108
POST-DEPOSITION ANNEAL IN N-CONTAINING AMBIENT
S112
DEPOSIT HfO2 BLOCKING LAYER
S116
POST DEPOSITION ANNEAL N-CONTAINING AMBIENT
S120
DEPOSIT SIO2 CAPPING LAYER
S124

FIGURE 3

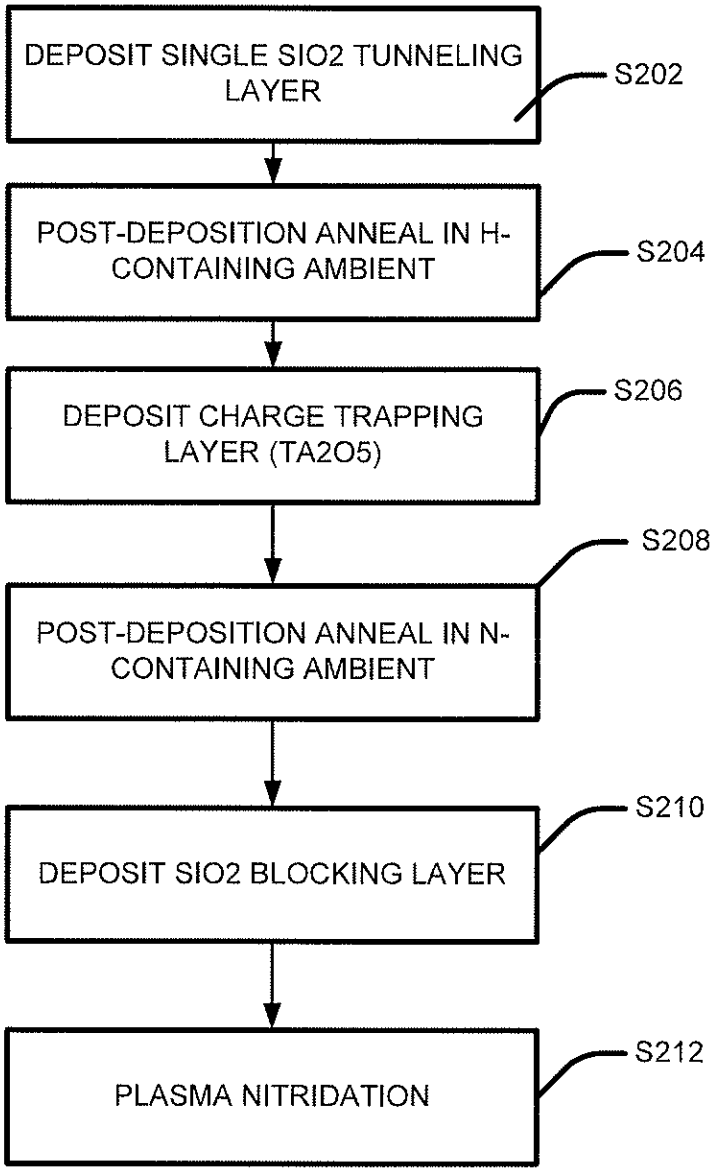
DEPOSIT SINGLE SIO2 TUNNELING LAYER
S202
POST-DEPOSITION ANNEAL IN H-CONTAINING AMBIENT
S204
DEPOSIT CHARGE TRAPPING LAYER (TA2O5)
S206
POST-DEPOSITION ANNEAL IN N-CONTAINING AMBIENT
S208
DEPOSIT SIO2 BLOCKING LAYER
S210
PLASMA NITRIDATION
S212

FIGURE 4