Figure 1

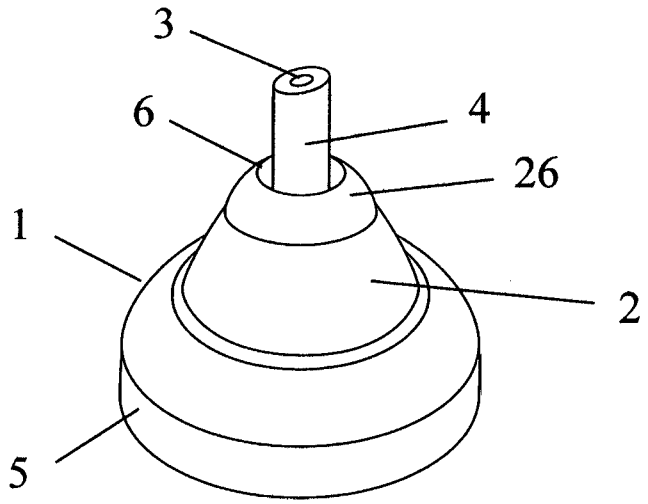

Figure 2

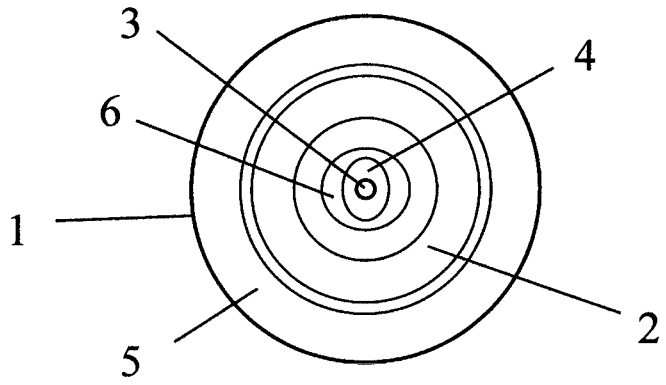

Figure 3A

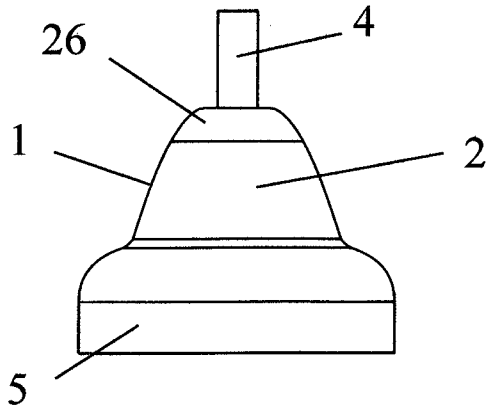

Figure 3B

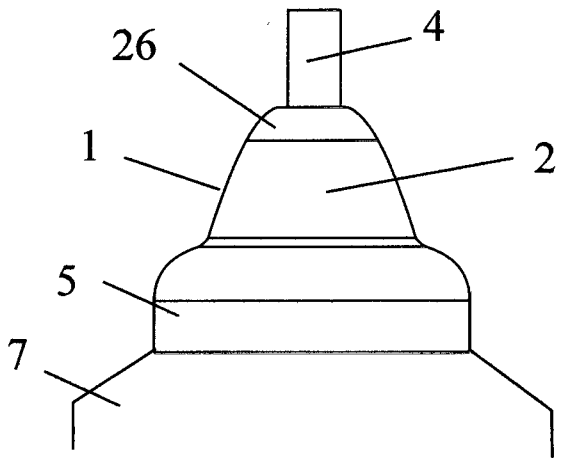

Figure 4

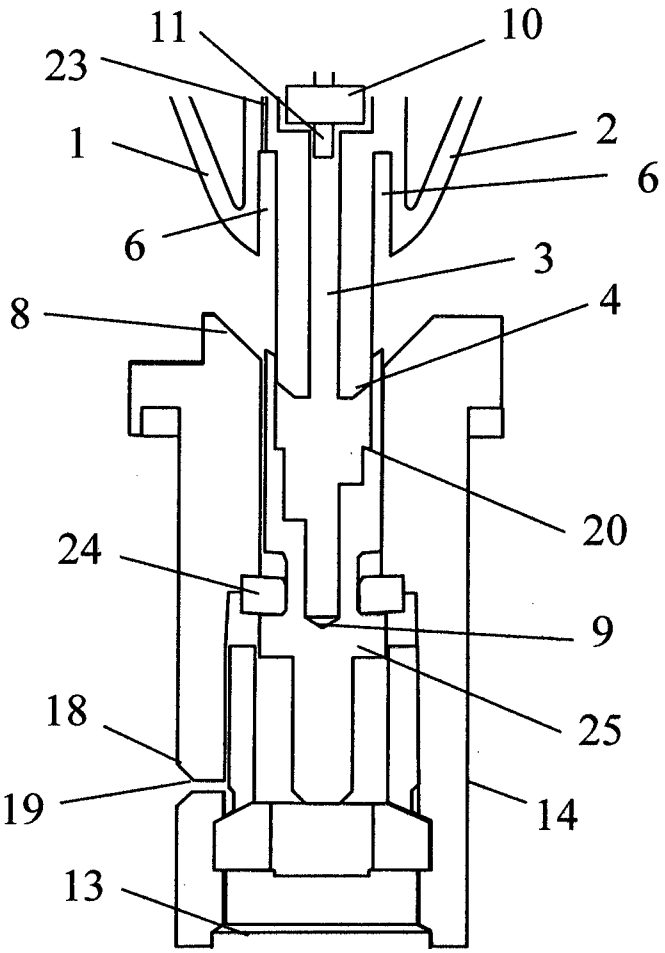

Figure 5

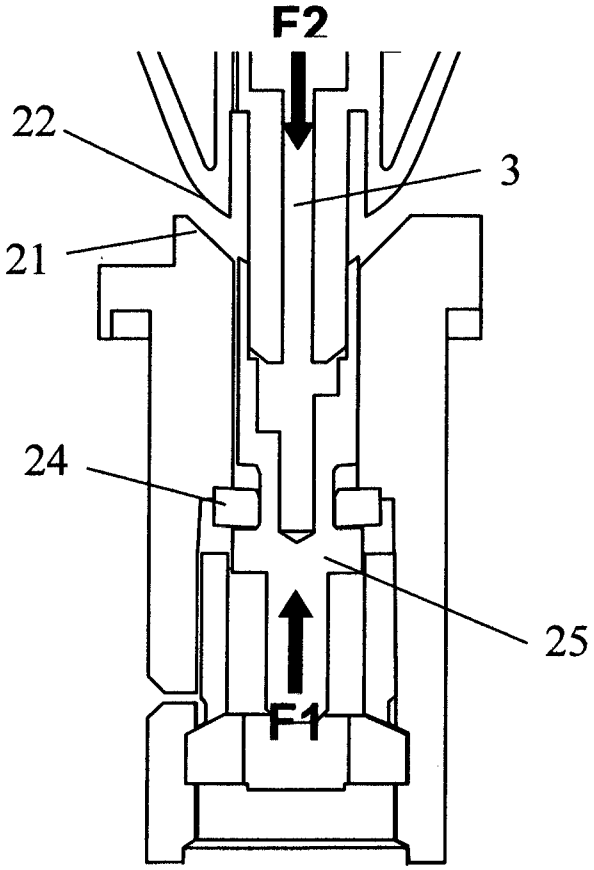

Figure 6

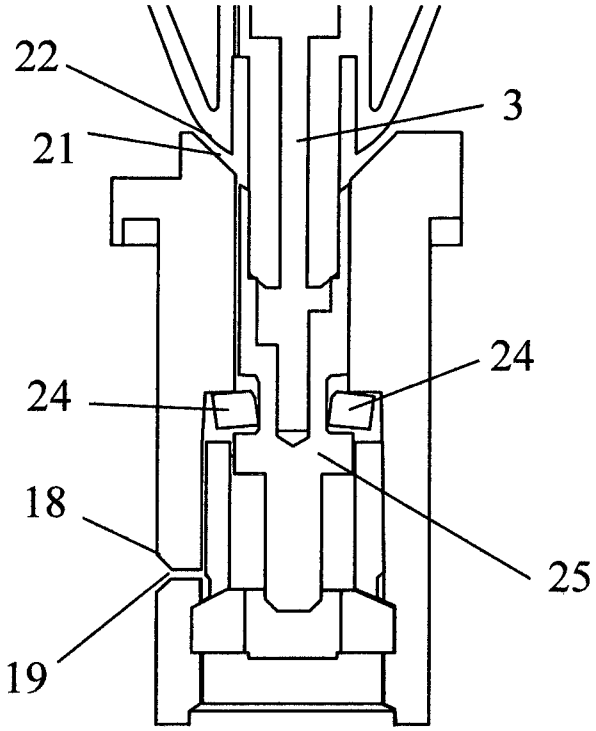

Figure 7

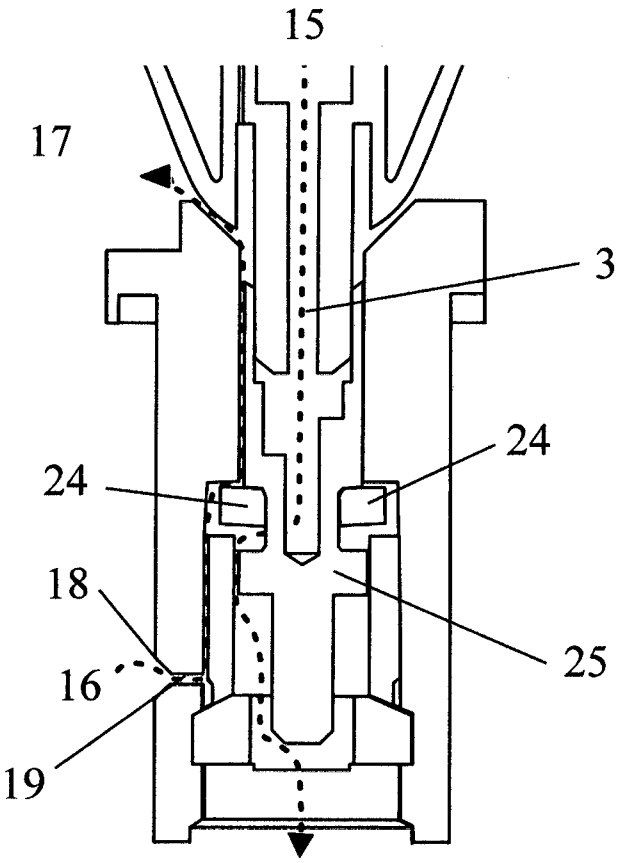

Figure 8

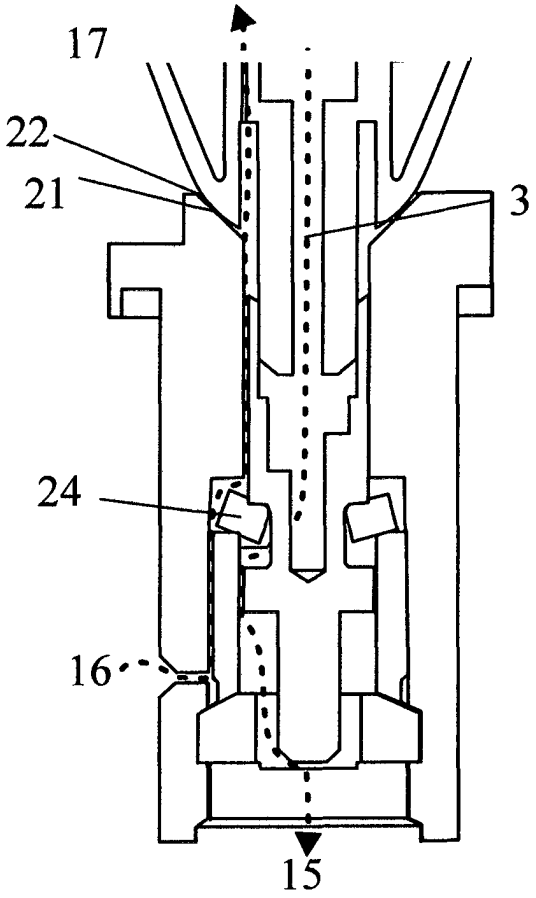

Figure 9

