FIG 1

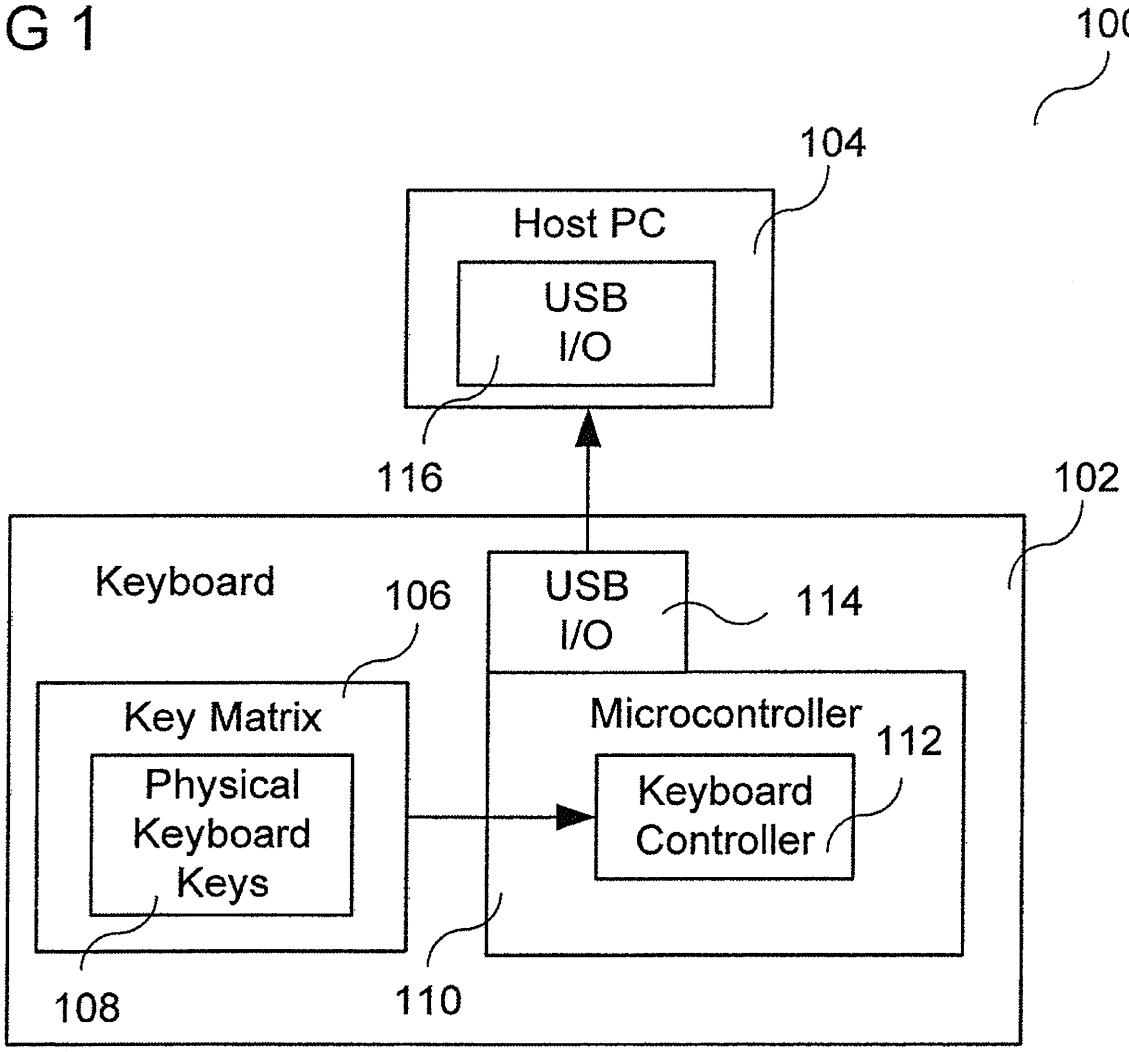
100
104
Host PC
USB
I/O
116
102
Keyboard
106
USB
I/O
114
Key Matrix
Physical
Keyboard
Keys
Microcontroller
112
Keyboard
Controller
108
110

FIG 2

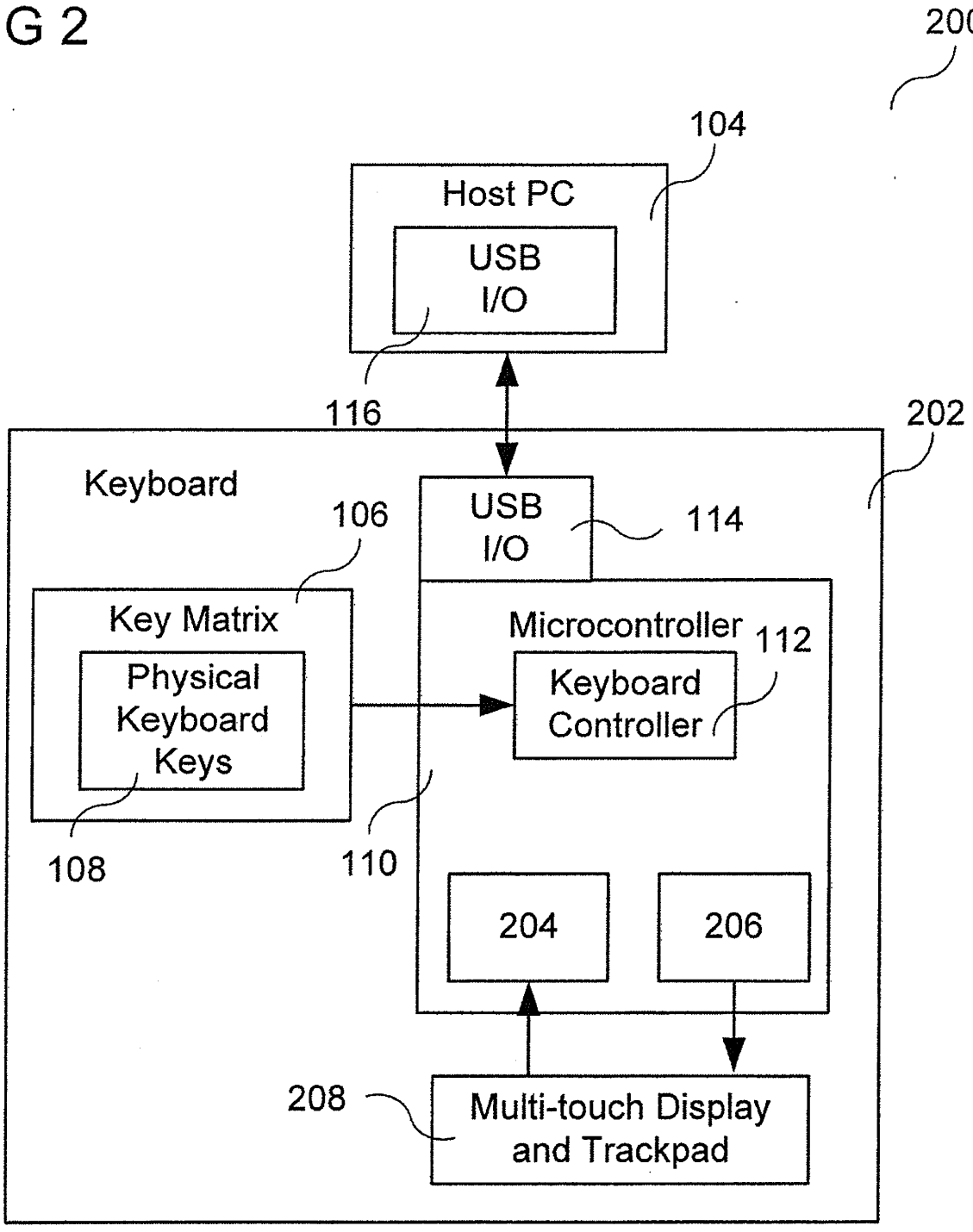
200
104
Host PC
USB
I/O
116
202
Keyboard
106
USB
I/O
114
Key Matrix
Physical
Keyboard
Keys
108
Microcontroller
112
Keyboard
Controller
110
204
206
208
Multi-touch Display
and Trackpad

FIG 3

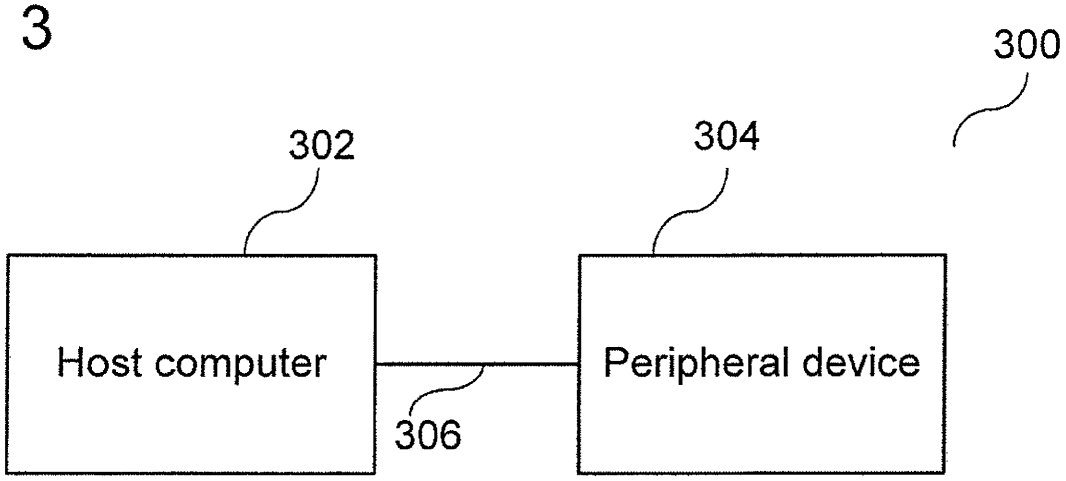
300
302
304
Host computer
Peripheral device
306

FIG 4

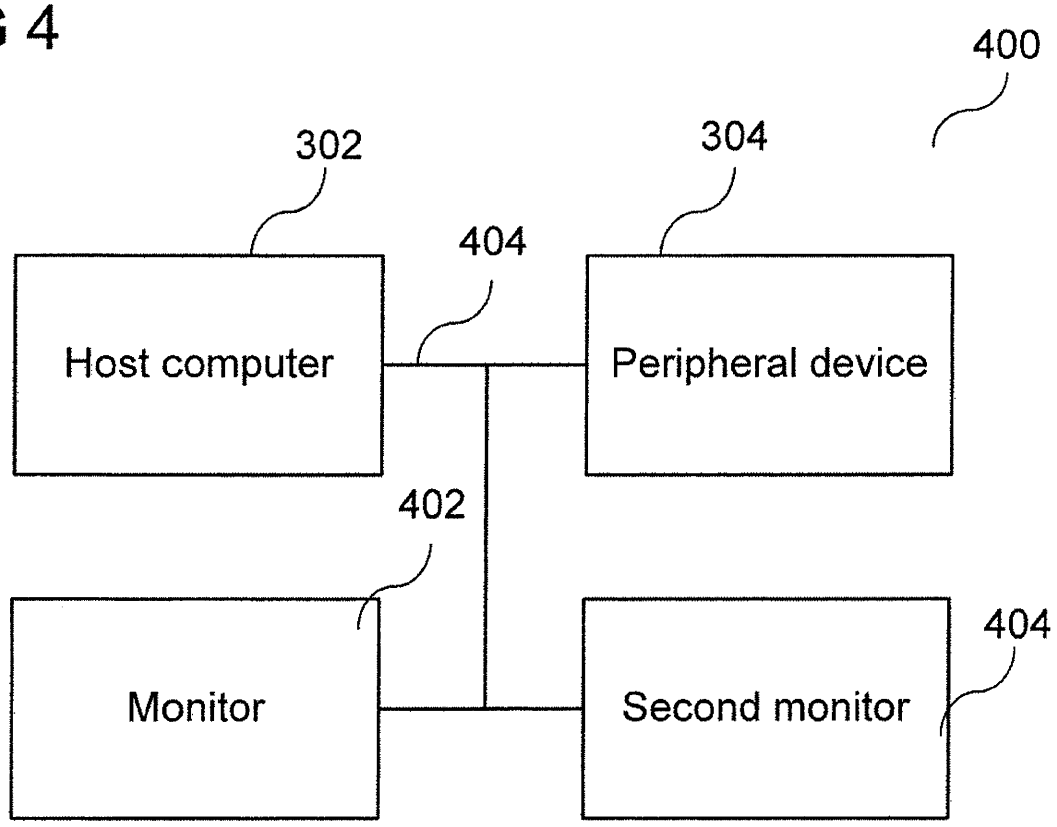
400
302
304
404
Host computer
Peripheral device
402
Monitor
Second monitor
404

FIG 5

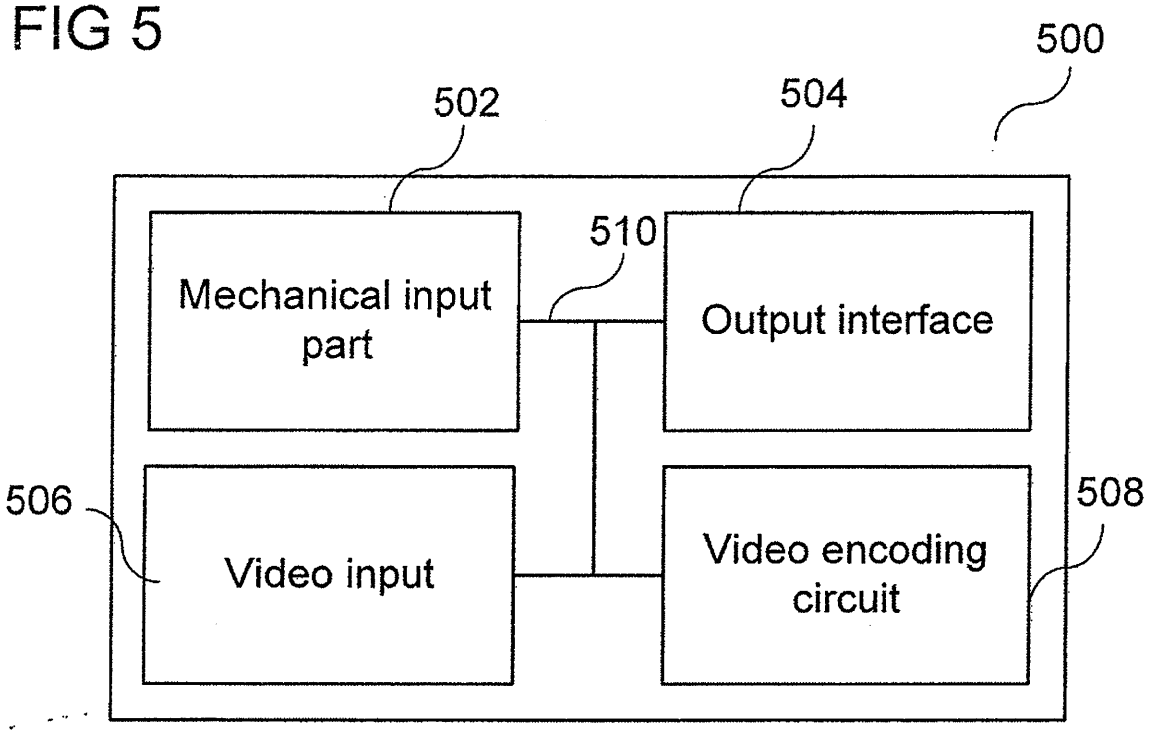
500
502
504
510
Mechanical input part
Output interface
506
Video input
Video encoding circuit
508

FIG 7

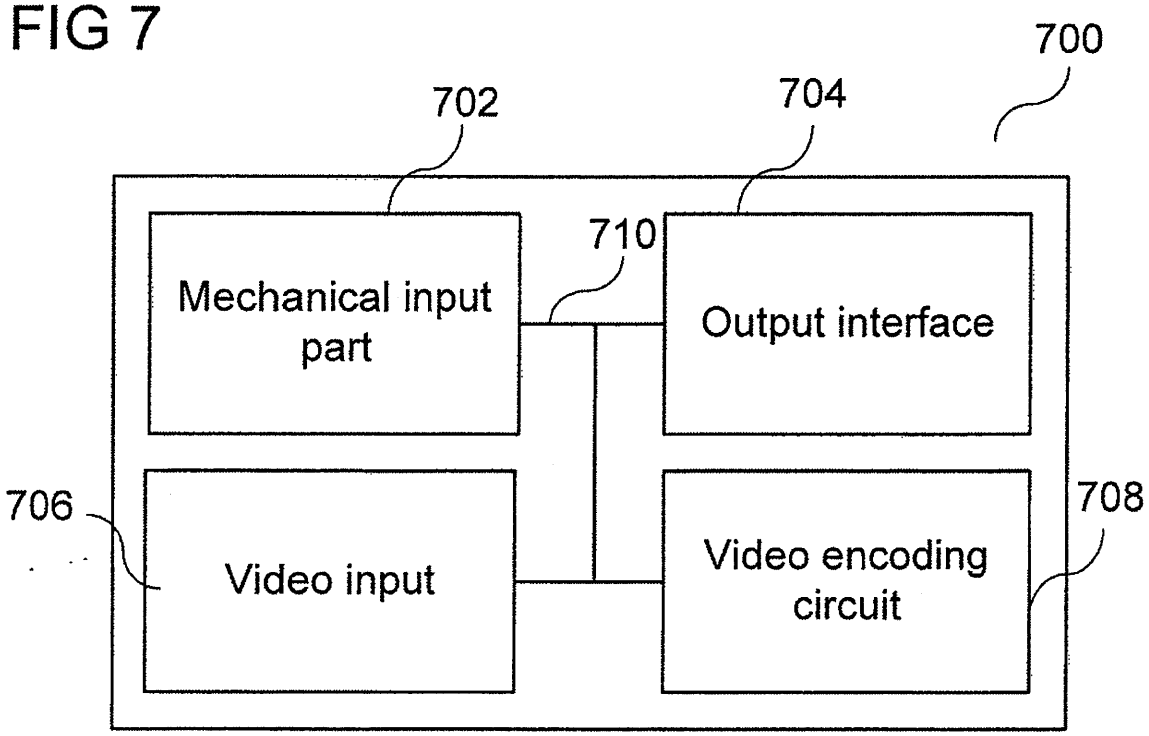
700
702
704
710
Mechanical input part
Output interface
706
Video input
Video encoding circuit
708

FIG 6

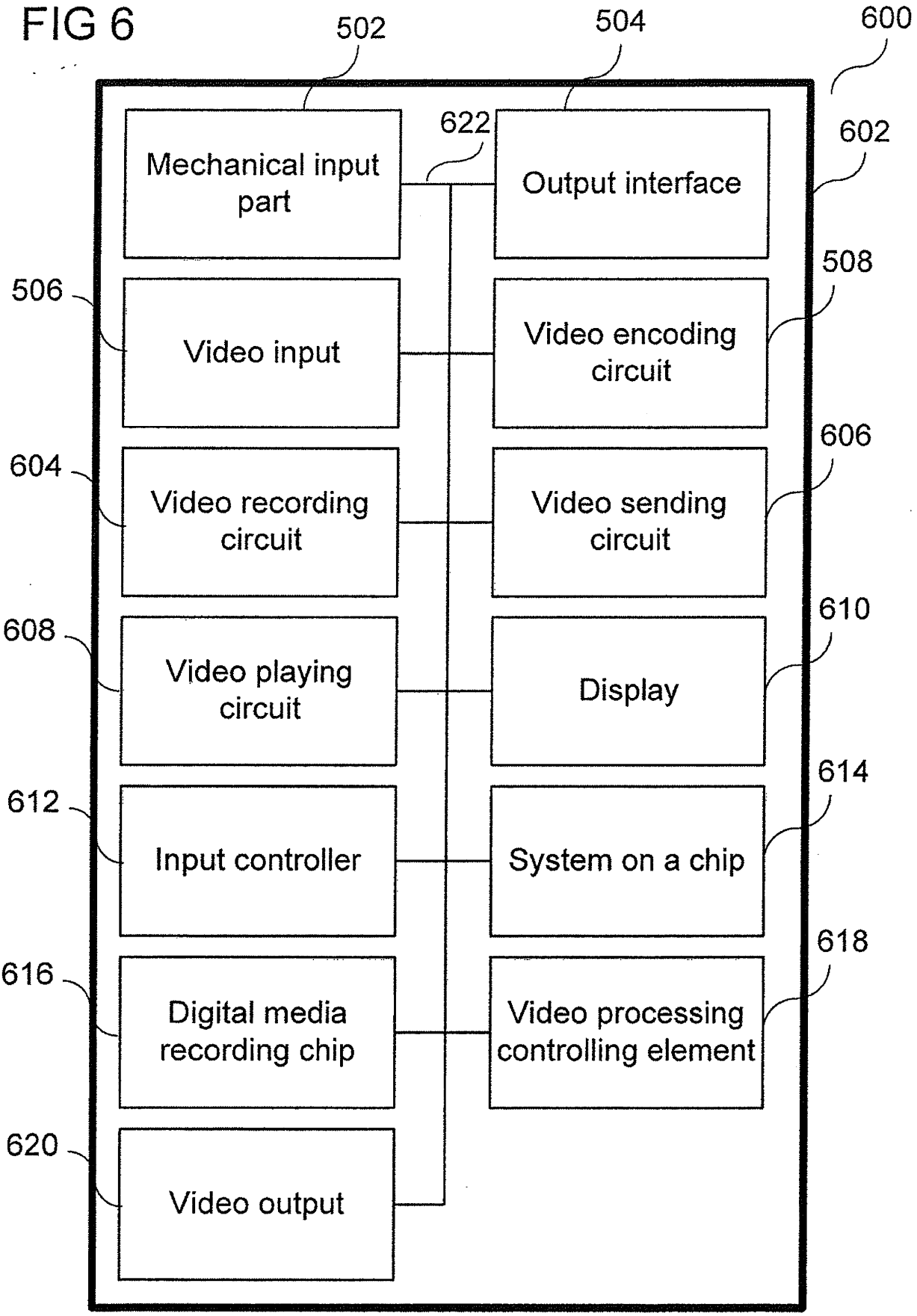
502
504
600
622
602
Mechanical input part
Output interface
508
506
Video input
Video encoding circuit
606
604
Video recording circuit
Video sending circuit
610
608
Video playing circuit
Display
614
612
Input controller
System on a chip
618
616
Digital media recording chip
Video processing controlling element
620
Video output

FIG 8

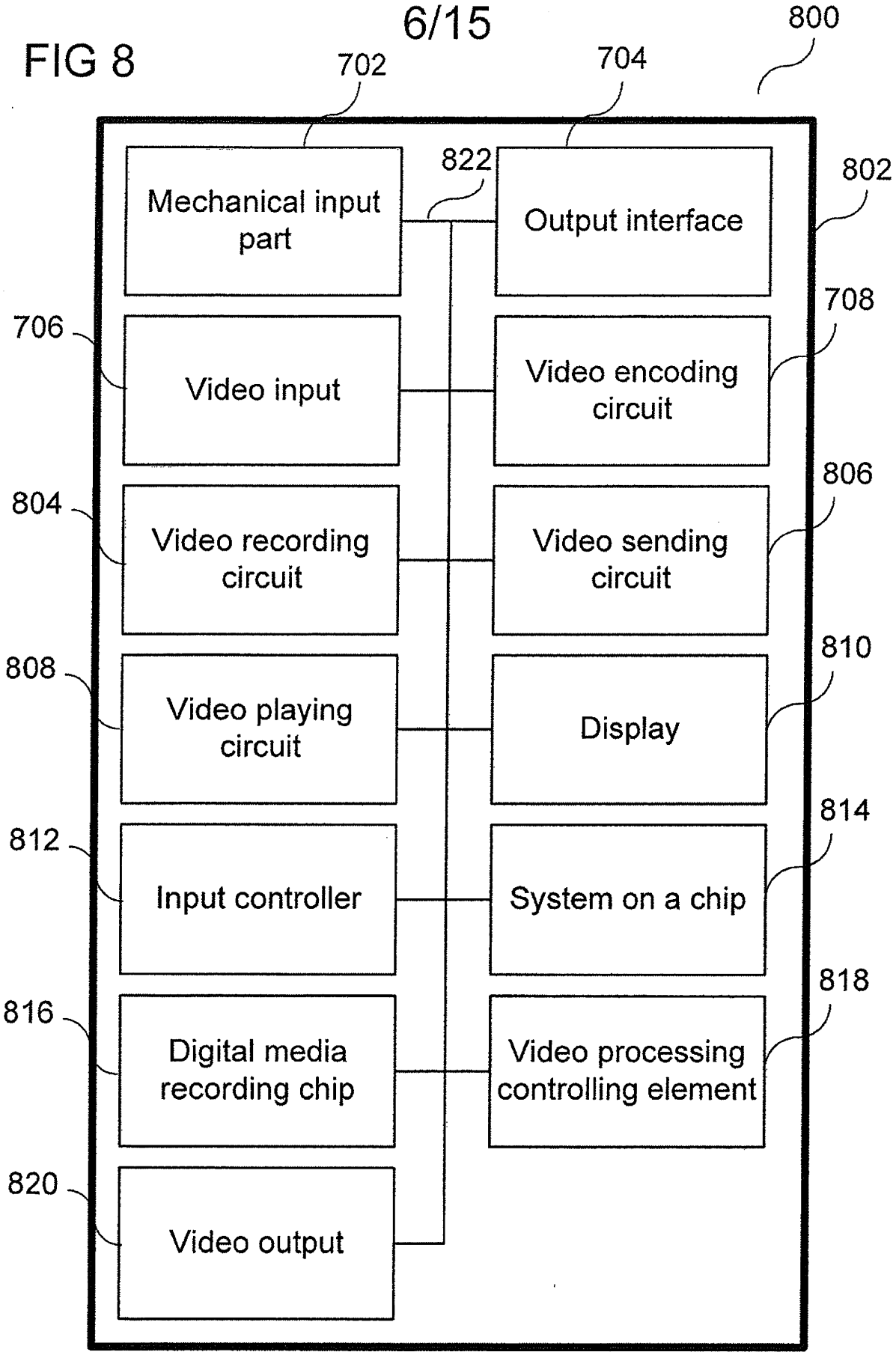
800
702
704
822
802
Mechanical input part
Output interface
706
708
Video input
Video encoding circuit
804
806
Video recording circuit
Video sending circuit
808
810
Video playing circuit
Display
812
814
Input controller
System on a chip
816
818
Digital media recording chip
Video processing controlling element
820
Video output

FIG 9

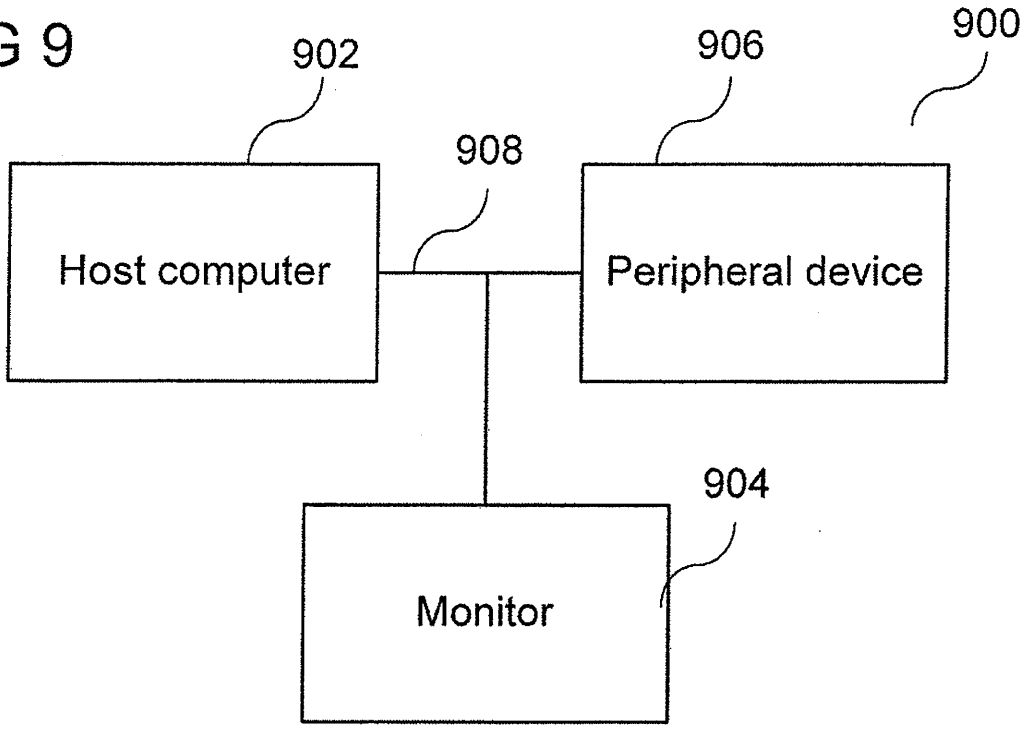
902
906
900
908
Host computer
Peripheral device
904
Monitor

FIG 10

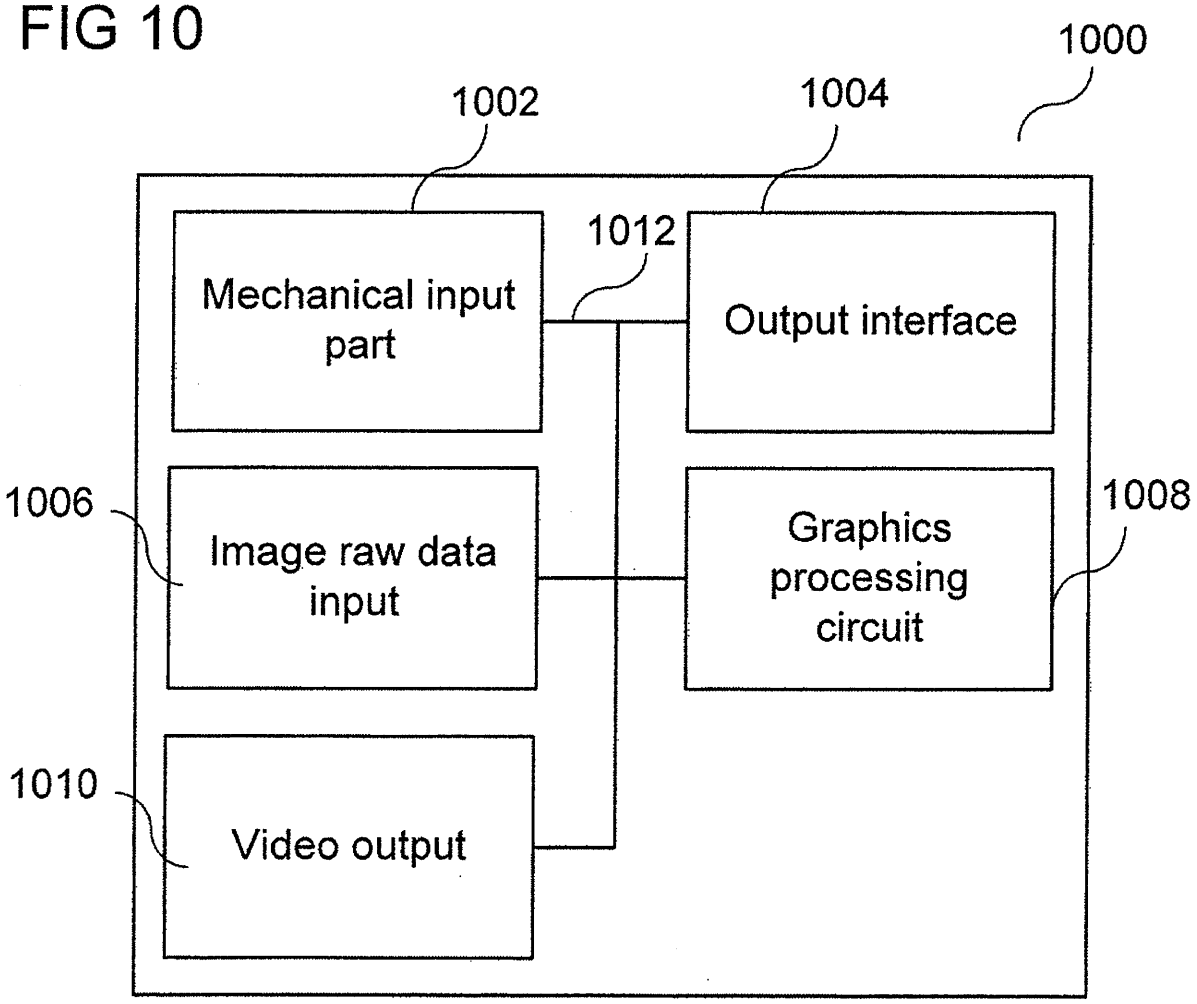
1000
1002
1004
1012
Mechanical input part
Output interface
1006
Image raw data input
Graphics processing circuit
1008
1010
Video output

FIG 11

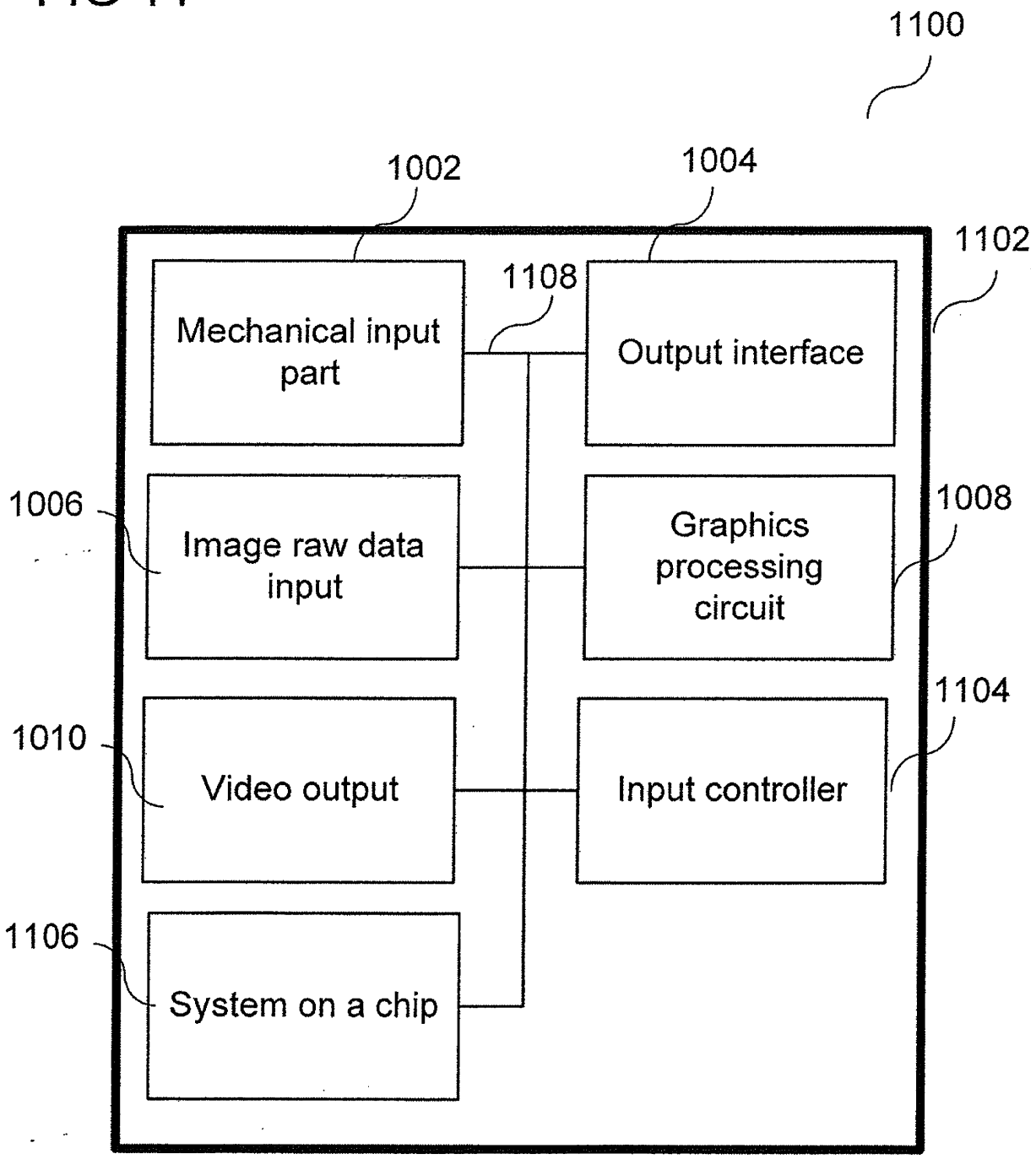
1100
1002
1004
1102
1108
Mechanical input part
Output interface
1006
Image raw data input
Graphics processing circuit
1008
1010
Video output
Input controller
1104
1106
System on a chip

FIG 12

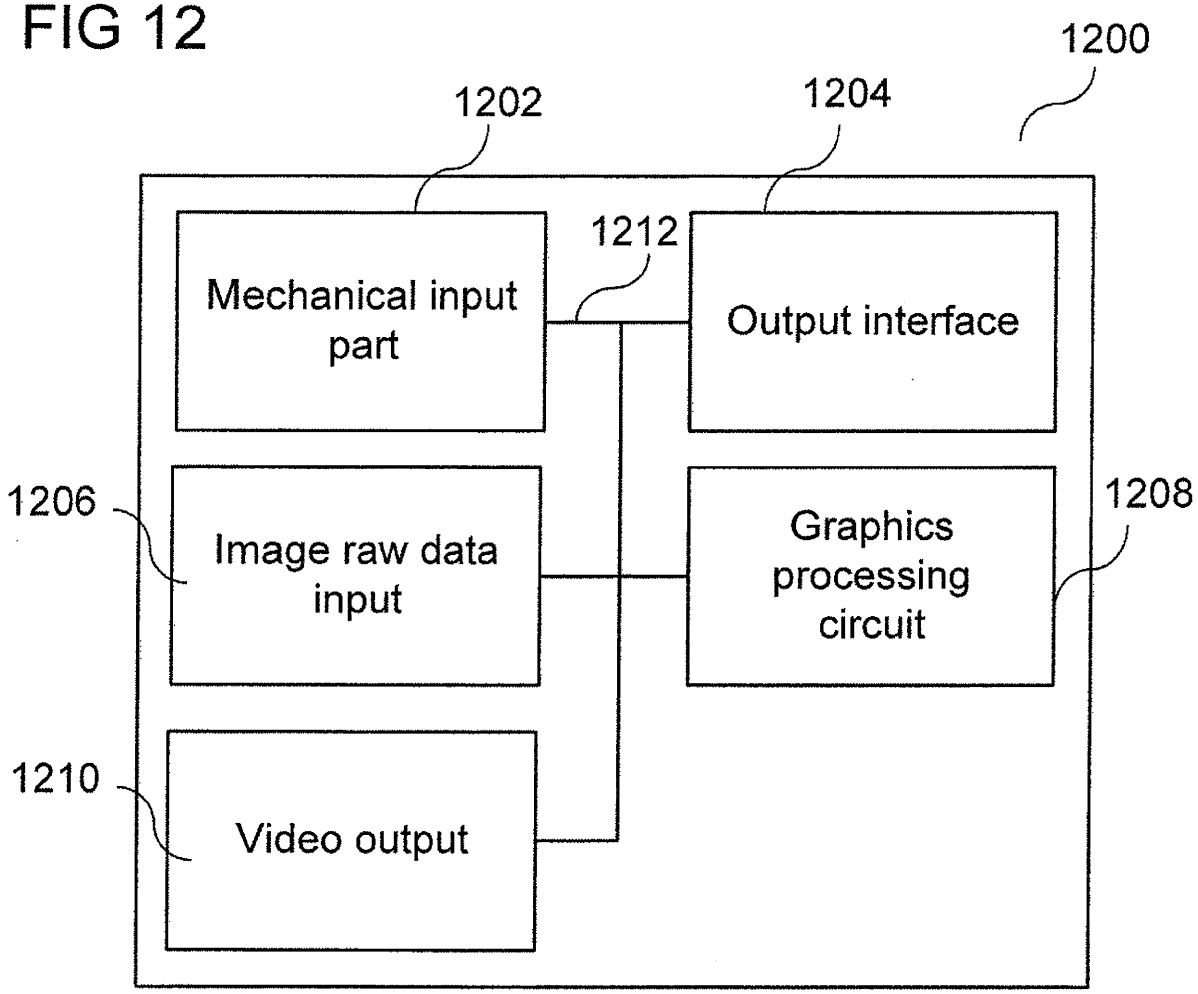
1200
1202
1204
1212
Mechanical input part
Output interface
1206
Image raw data input
Graphics processing circuit
1208
1210
Video output

FIG 13

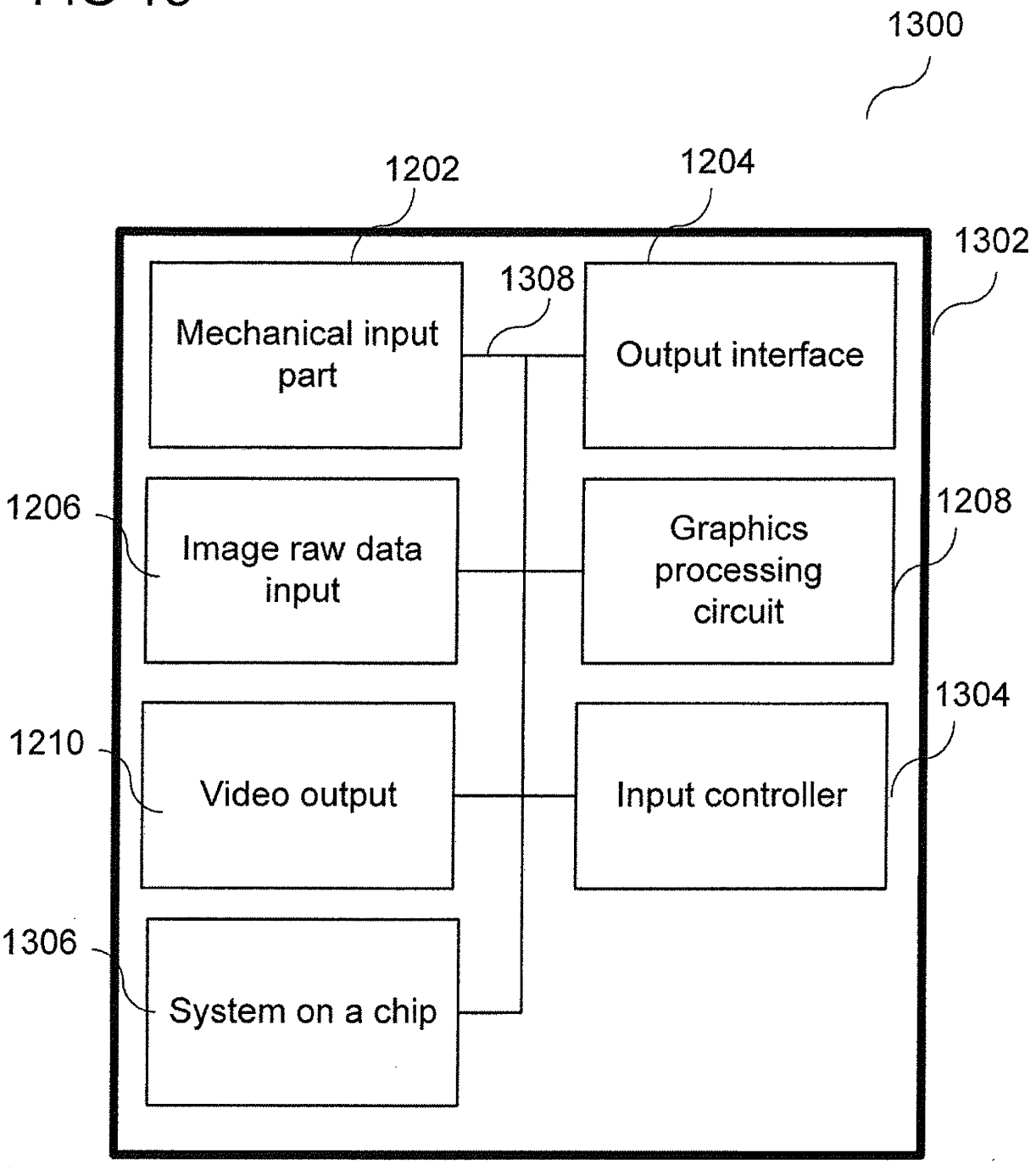
1300
1202
1204
1302
1308
Mechanical input part
Output interface
1206
Image raw data input
Graphics processing circuit
1208
1210
Video output
Input controller
1304
1306
System on a chip

FIG 14

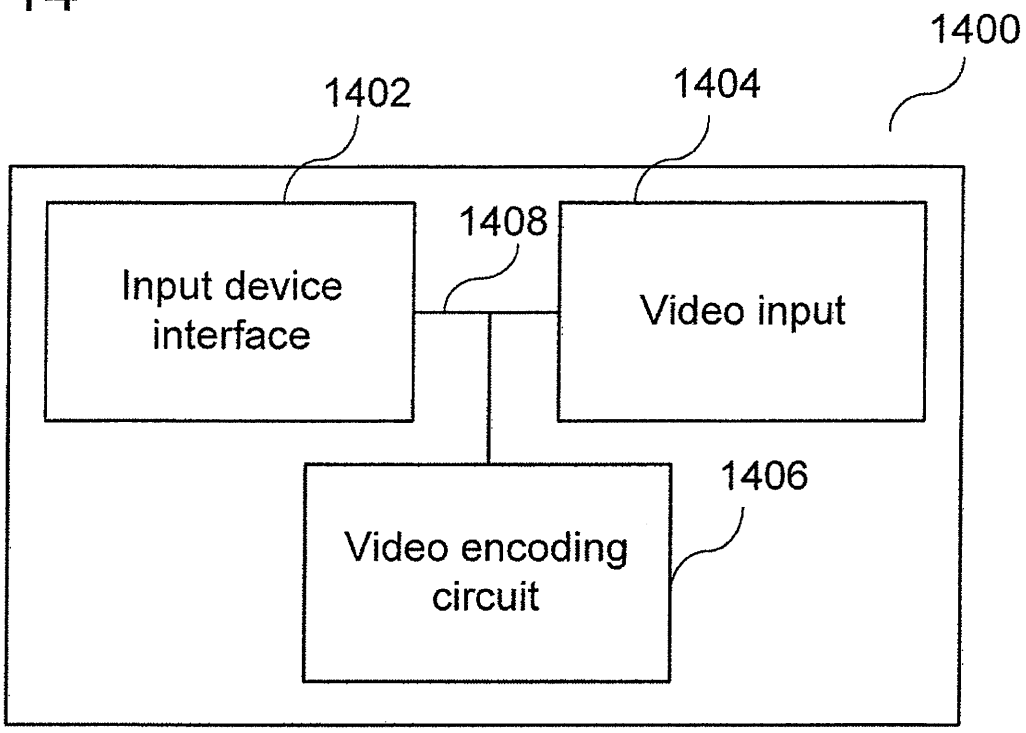
1400
1402
1404
1408
Input device interface
Video input
1406
Video encoding circuit

FIG 15

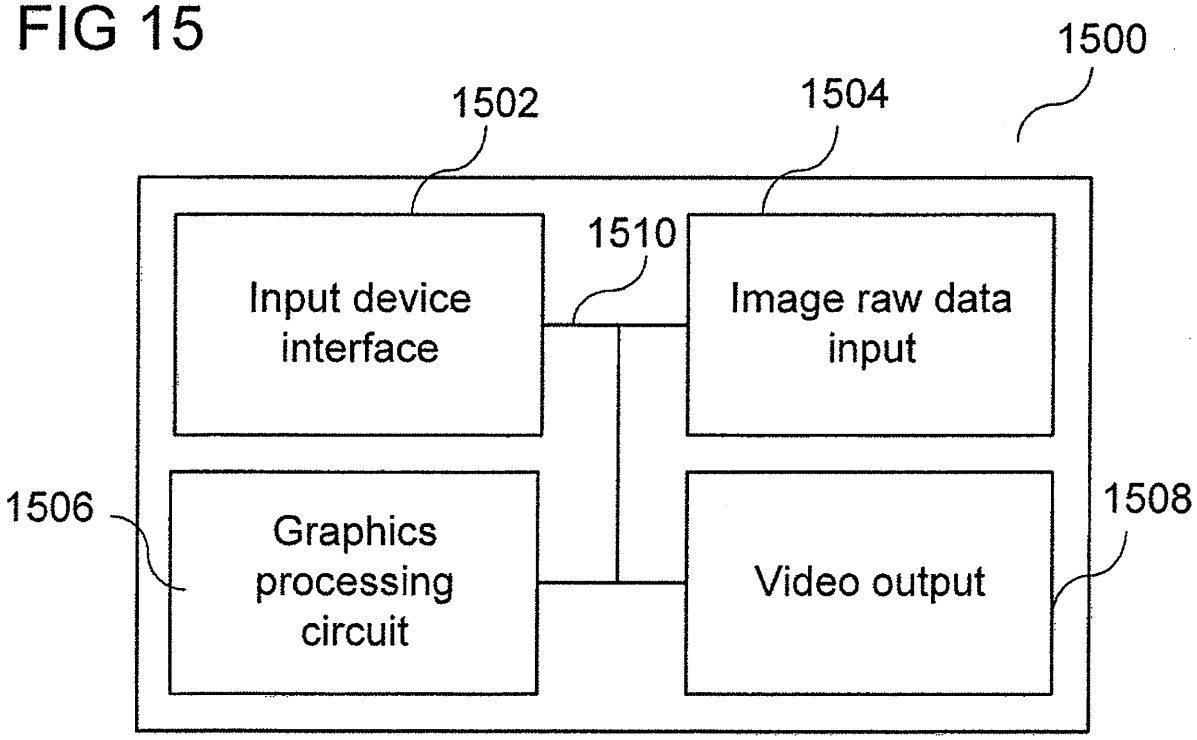
1500
1502
1504
1510
Input device interface
Image raw data input
1506
Graphics processing circuit
Video output
1508

FIG 16

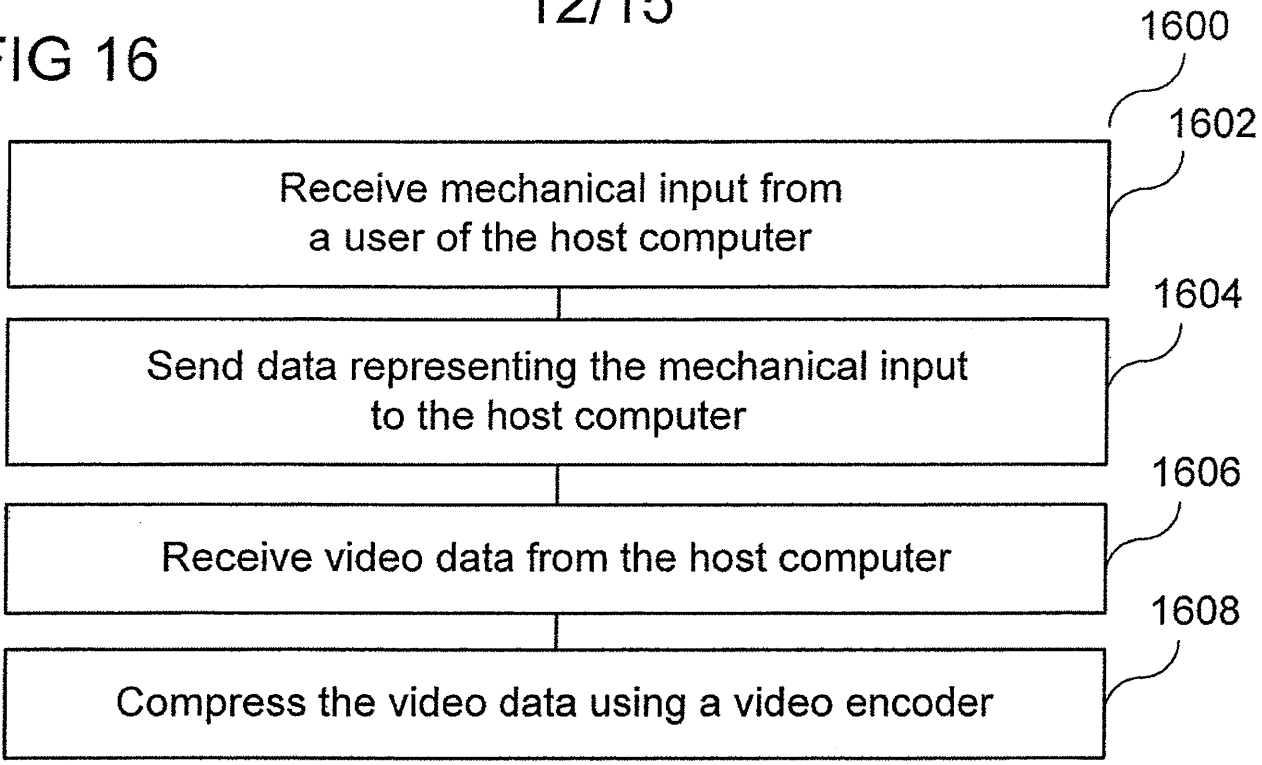
1600
1602
Receive mechanical input from a user of the host computer
1604
Send data representing the mechanical input to the host computer
1606
Receive video data from the host computer
1608
Compress the video data using a video encoder

FIG 17

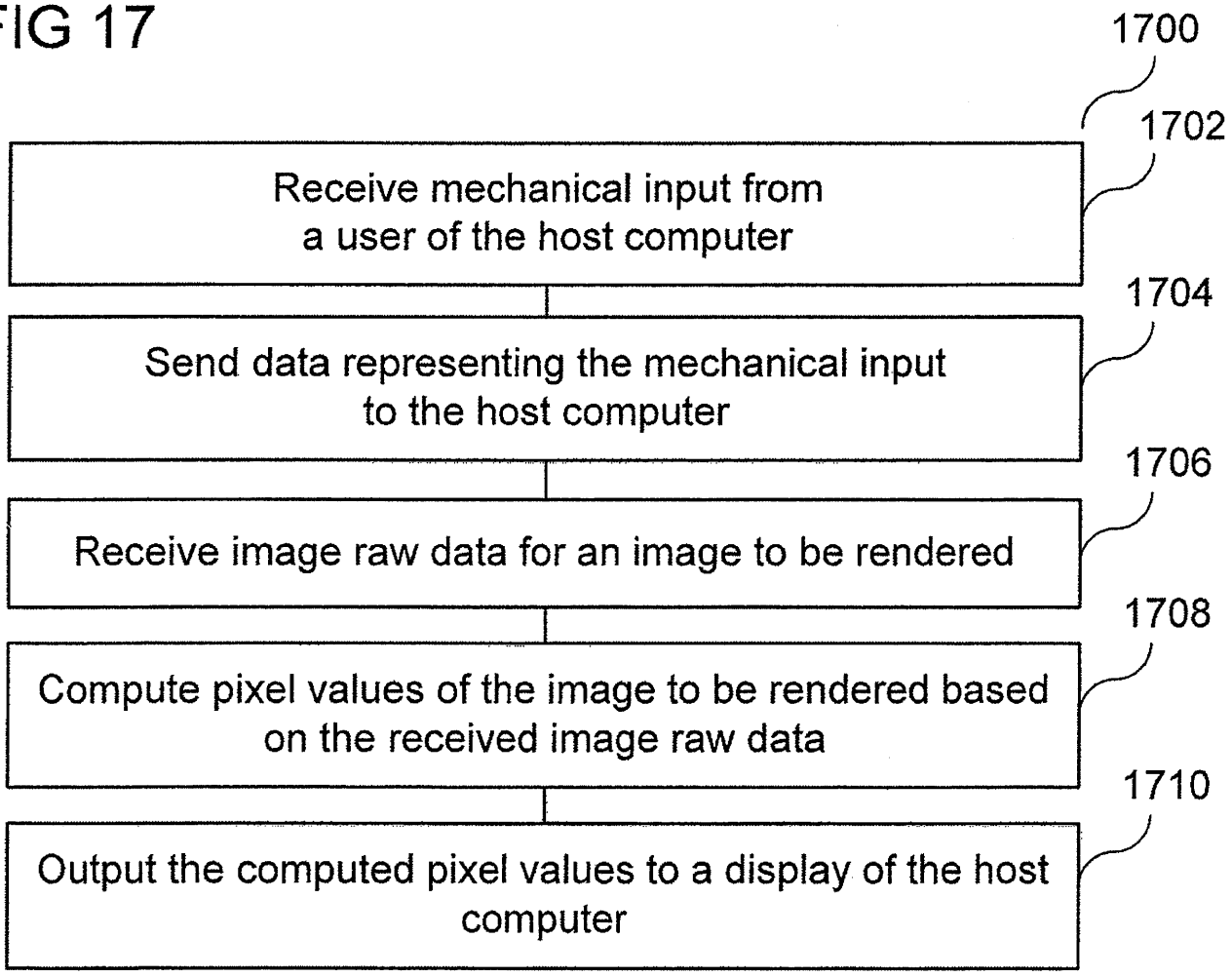
1700
1702
Receive mechanical input from a user of the host computer
1704
Send data representing the mechanical input to the host computer
1706
Receive image raw data for an image to be rendered
1708
Compute pixel values of the image to be rendered based on the received image raw data
1710
Output the computed pixel values to a display of the host computer

FIG 18

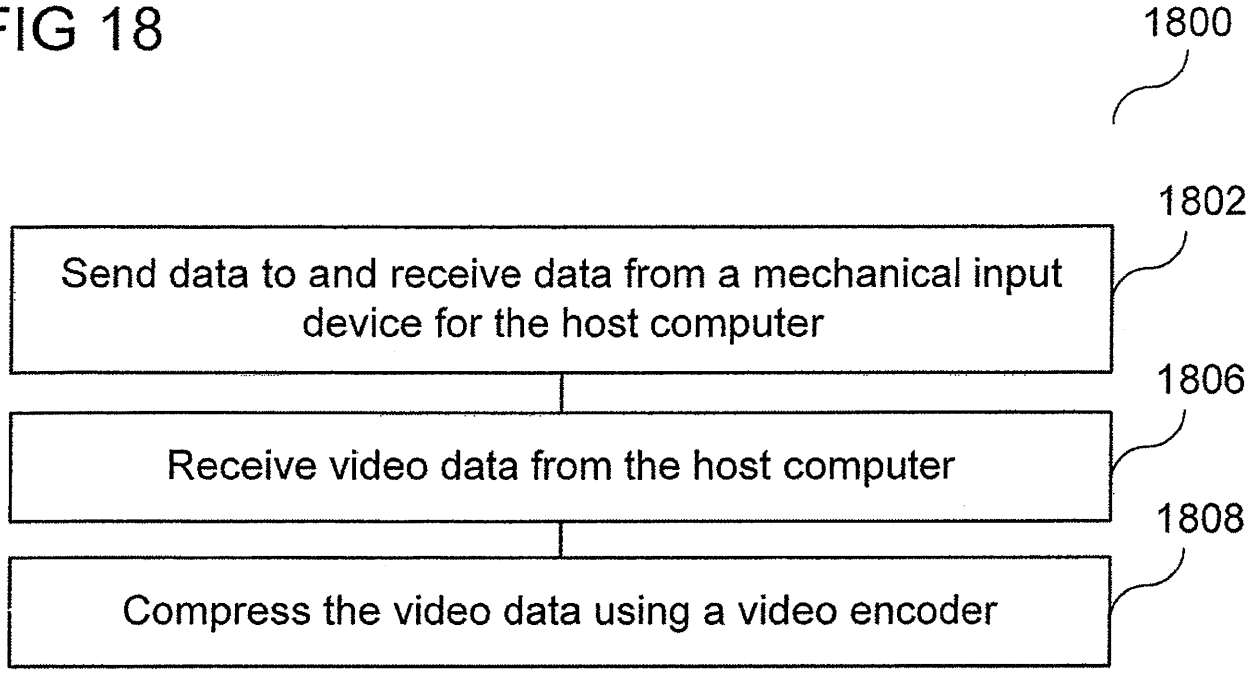
1800
1802
Send data to and receive data from a mechanical input device for the host computer
1806
Receive video data from the host computer
1808
Compress the video data using a video encoder

FIG 19

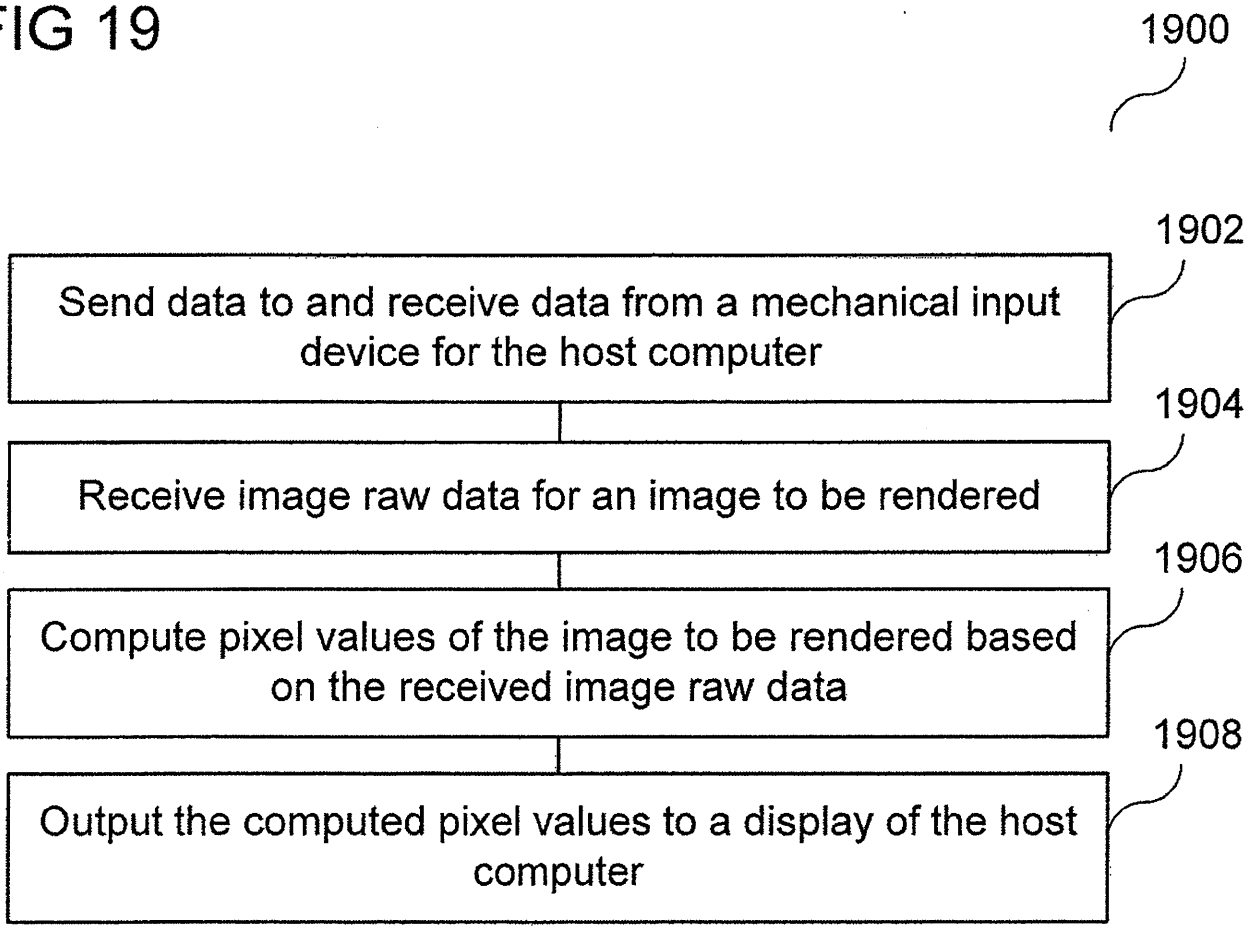
1900
1902
Send data to and receive data from a mechanical input device for the host computer
1904
Receive image raw data for an image to be rendered
1906
Compute pixel values of the image to be rendered based on the received image raw data
1908
Output the computed pixel values to a display of the host computer

FIG 20

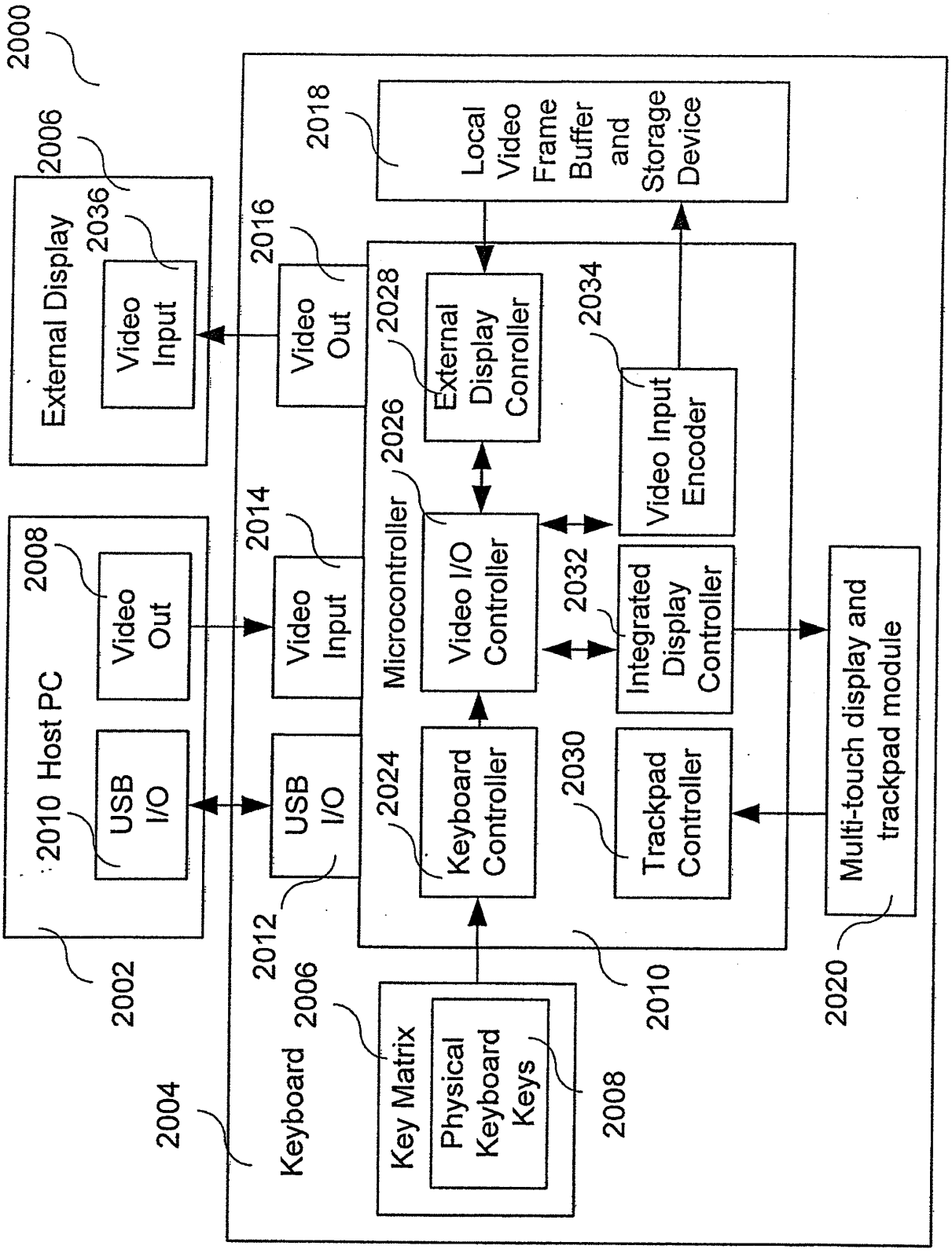
2000
2006
External Display
2036
Video Input
2016
Video Out
2018
Local Video Frame Buffer and Storage Device
2028
External Display Conroller
2034
Video Input Encoder
2026
Microcontroller
Video I/O Controller
2032
Integrated Display Controller
2014
Video Input
2008
Video Out
2010 Host PC
USB I/O
2012
USB I/O
2024
Keyboard Controller
2030
Trackpad Controller
Multi-touch display and trackpad module
2002
2004
Keyboard
2006
Key Matrix
Physical Keyboard Keys
2008
2010
2020

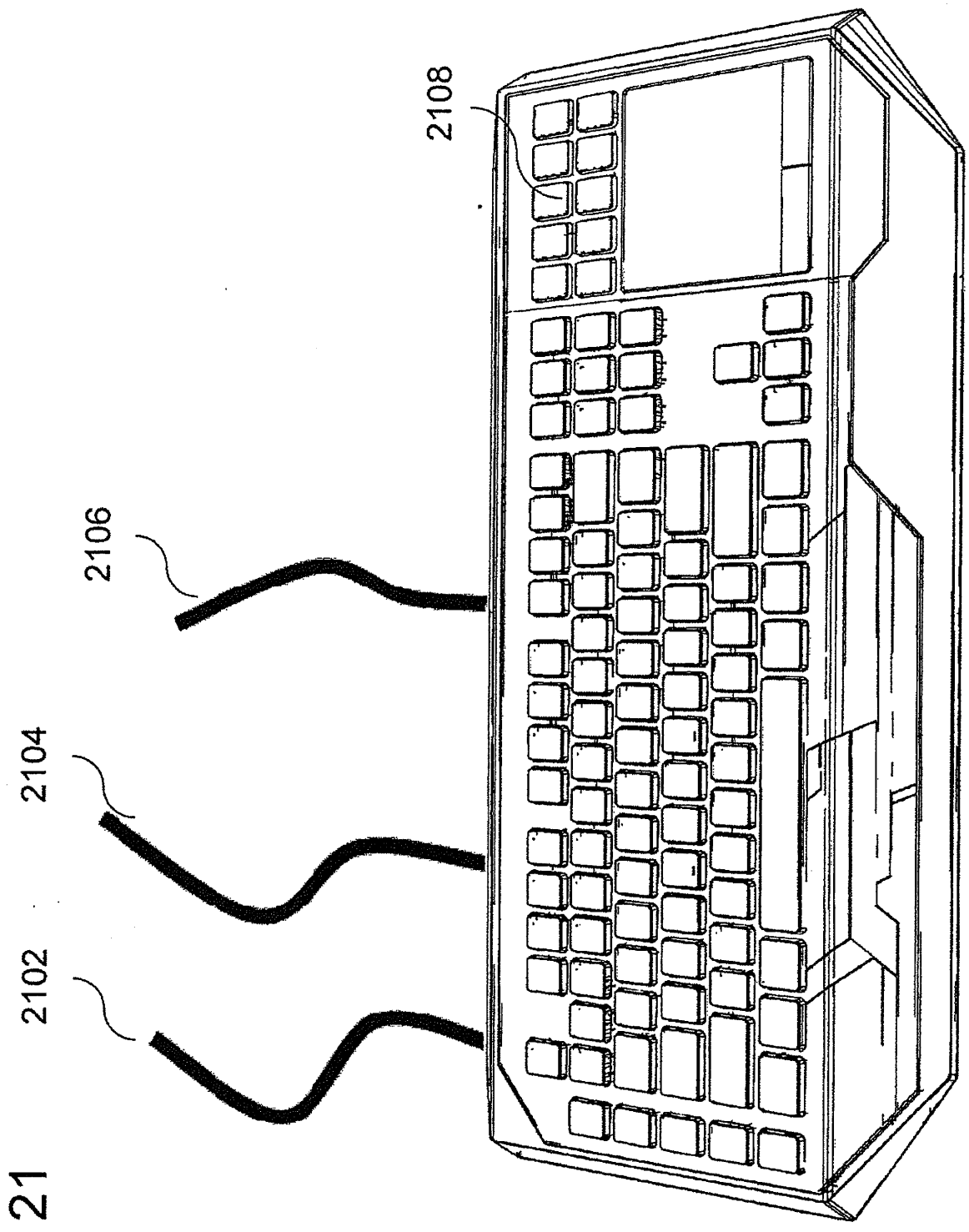

FIG 21