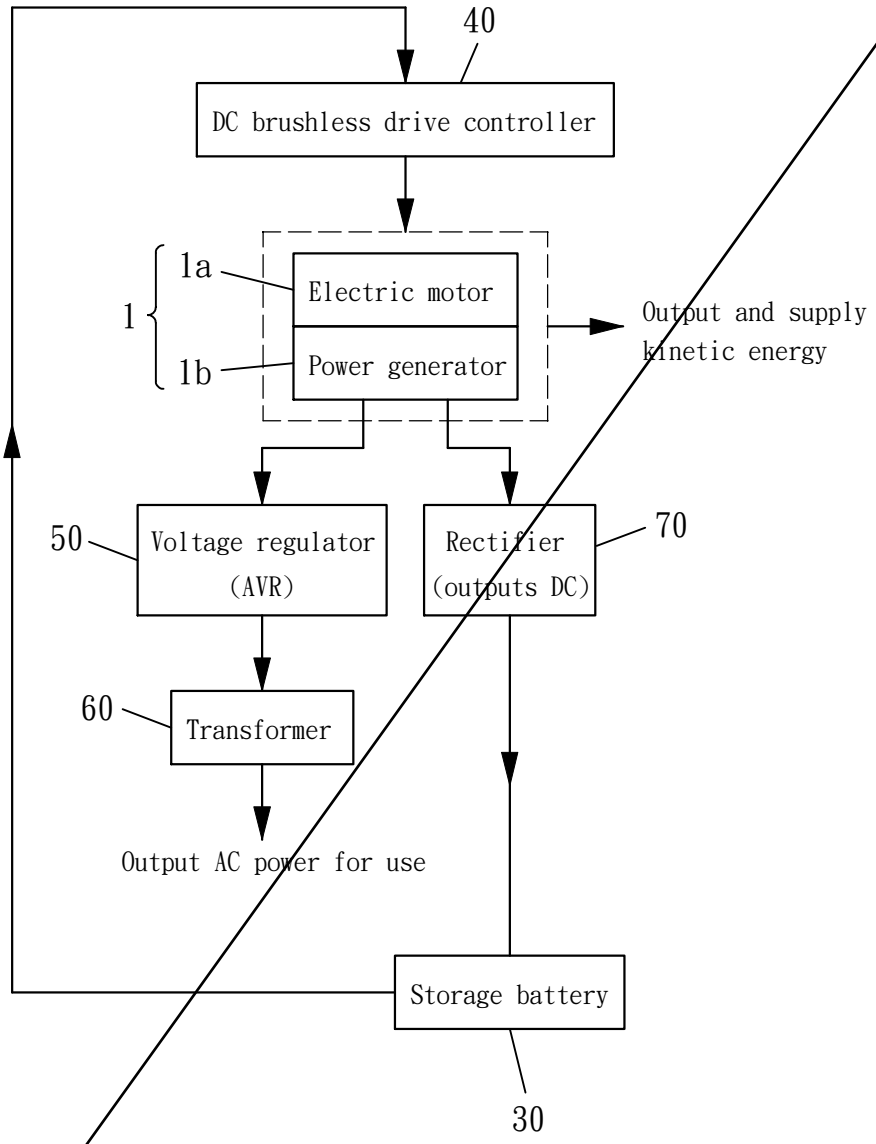
40
DC brushless drive controller
1
1a
Electric motor
1b
Power generator
Output and supply
kinetic energy
50
Voltage regulator
(AVR)
Rectifier
(outputs DC)
70
60
Transformer
Output AC power for use
Storage battery
30

FIG. 2

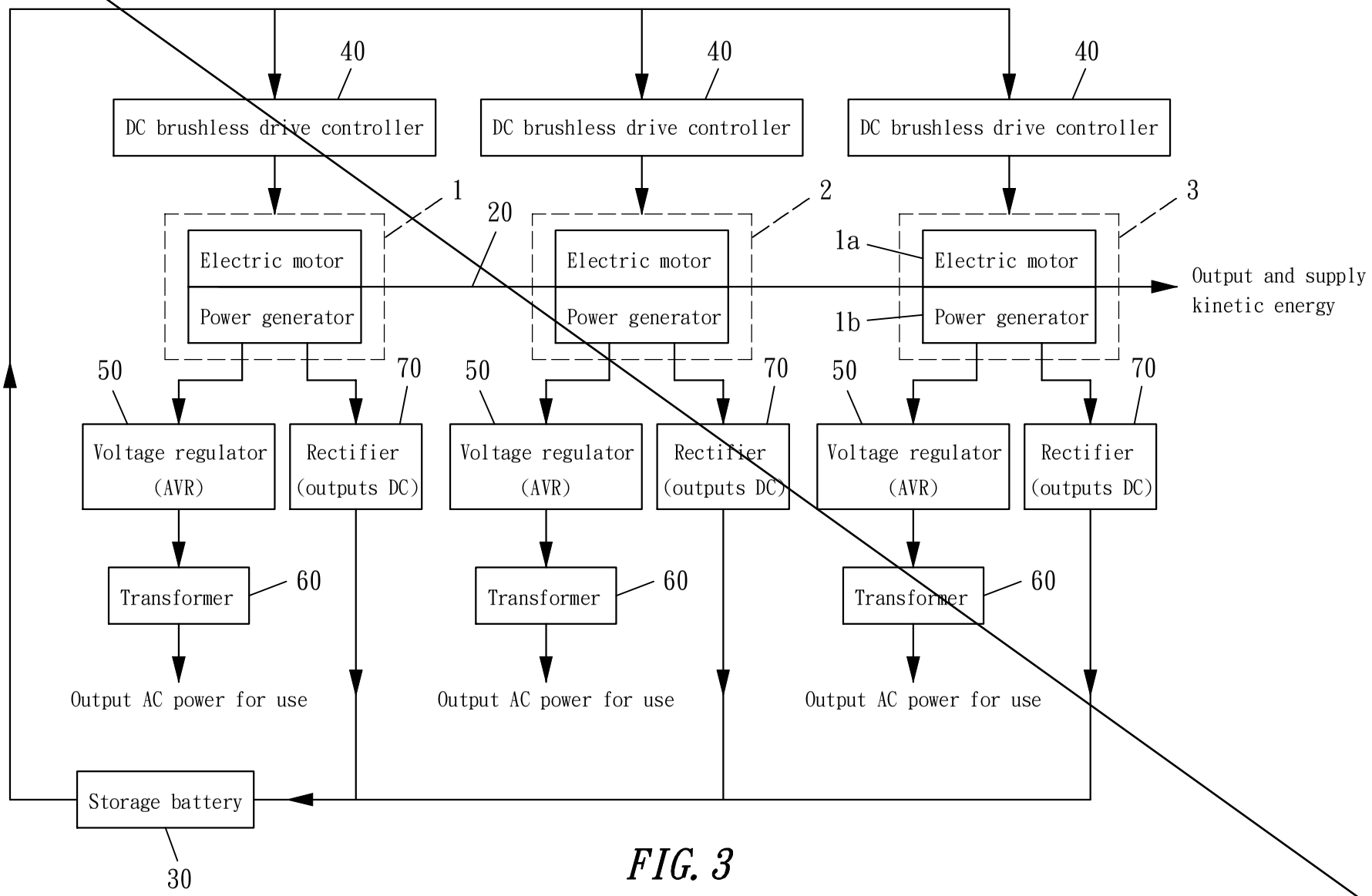
40
40
40
DC brushless drive controller
DC brushless drive controller
DC brushless drive controller
1
2
3
20
1a
1b
Electric motor
Power generator
Electric motor
Power generator
Electric motor
Power generator
Output and supply kinetic energy
50
70
50
70
50
70
Voltage regulator (AVR)
Rectifier (outputs DC)
Voltage regulator (AVR)
Rectifier (outputs DC)
Voltage regulator (AVR)
Rectifier (outputs DC)
Transformer
60
Transformer
60
Transformer
60
Output AC power for use
Output AC power for use
Output AC power for use
Storage battery
30

FIG. 3

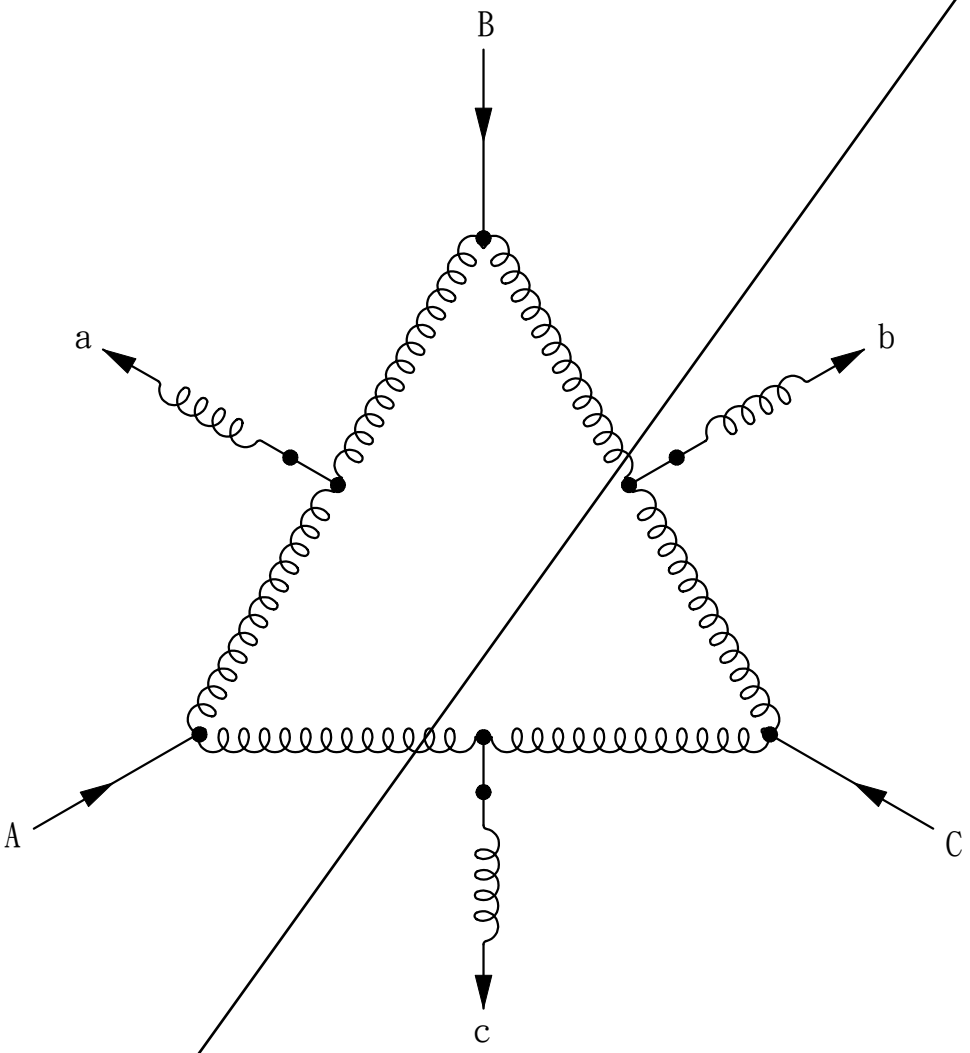

FIG. 4

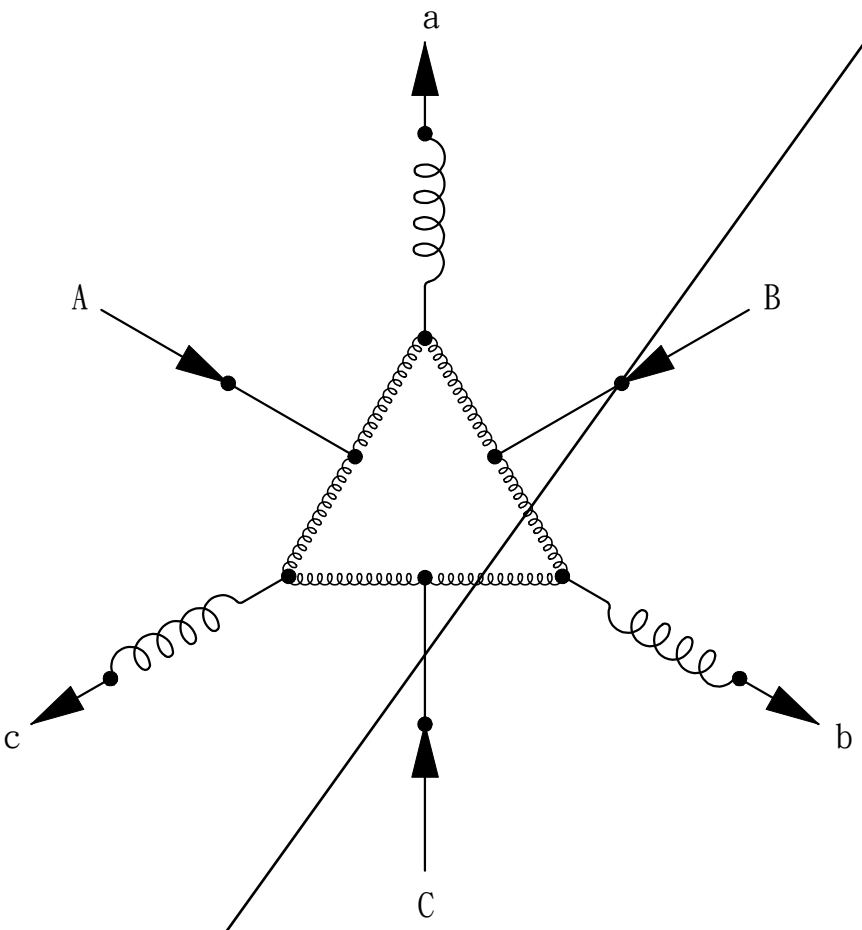

FIG. 5

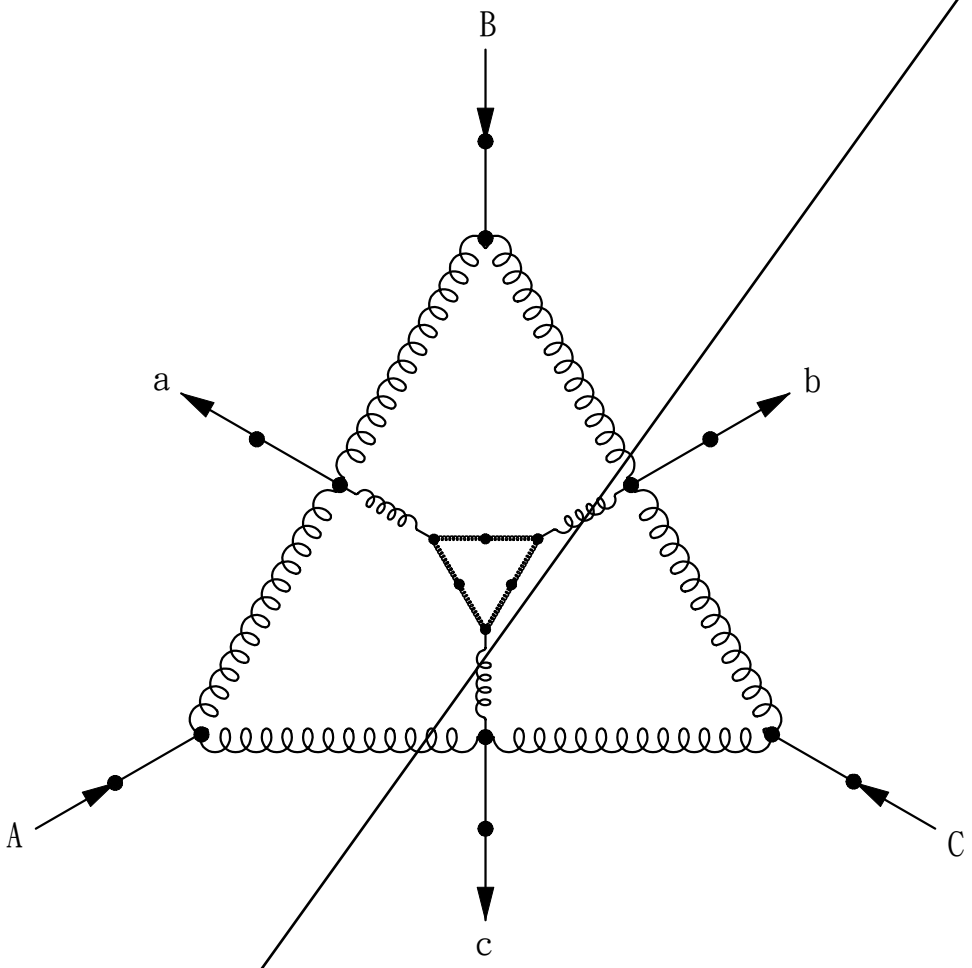

FIG. 6

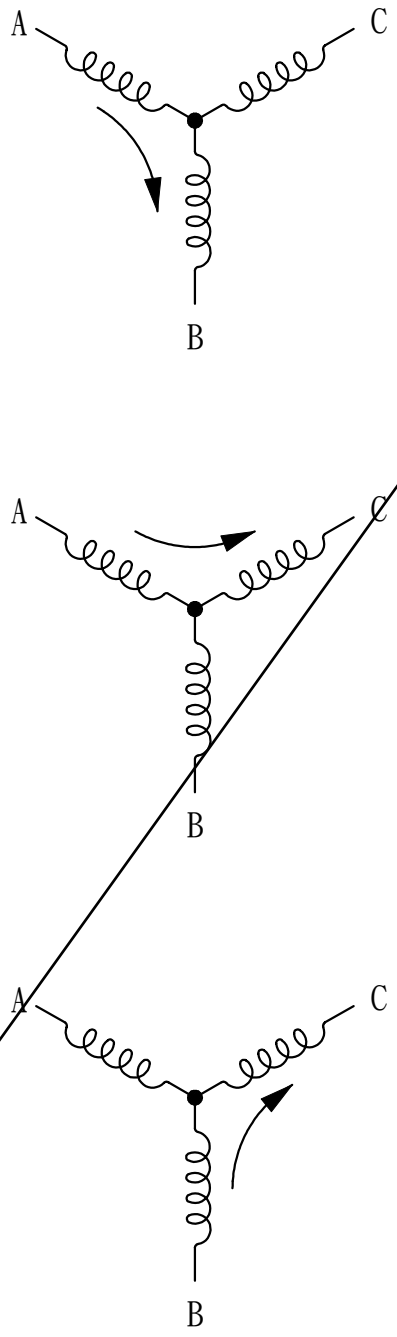

FIG. 7

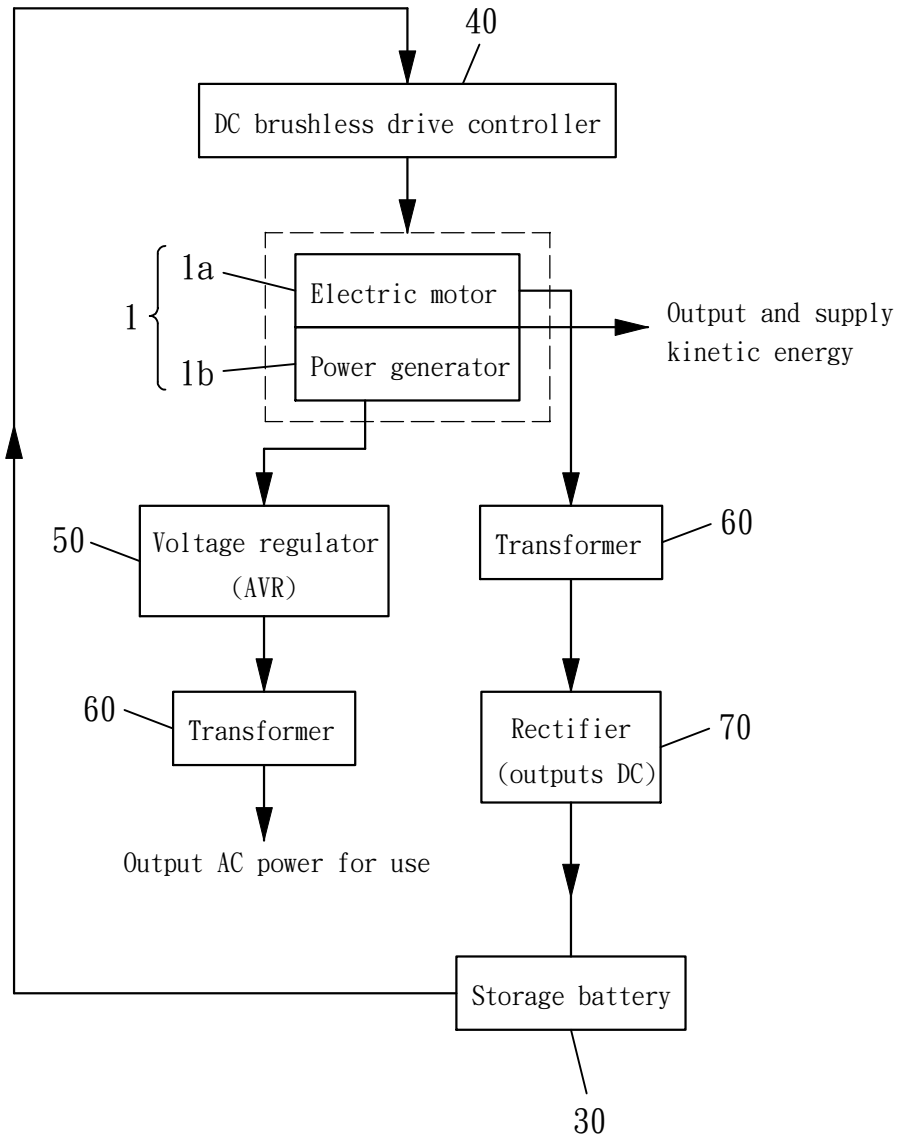
40
DC brushless drive controller
1
1a
Electric motor
1b
Power generator
Output and supply kinetic energy
50
Voltage regulator (AVR)
60
Transformer
60
Transformer
70
Rectifier (outputs DC)
Output AC power for use
Storage battery
30

FIG. 2

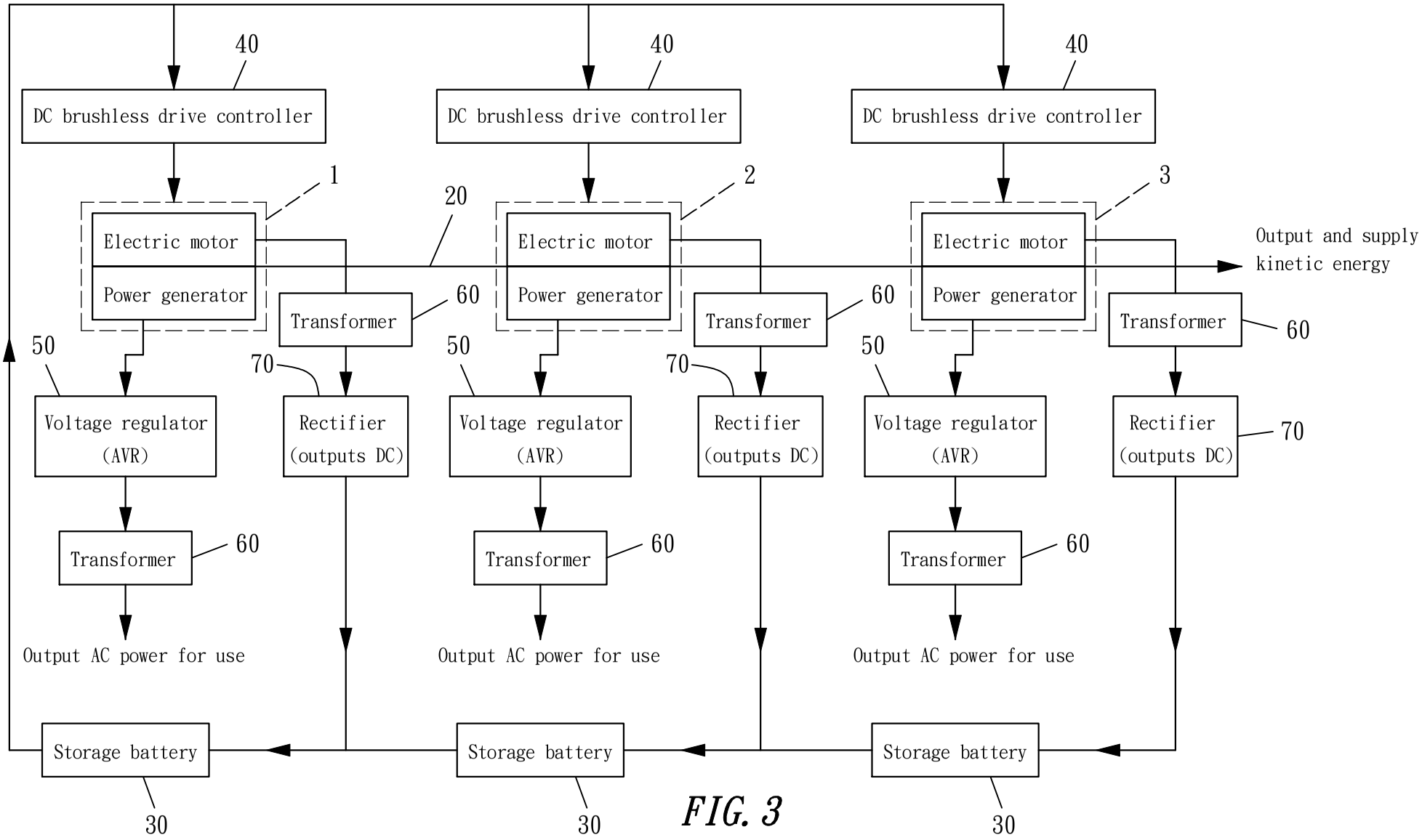
40
40
40
DC brushless drive controller
DC brushless drive controller
DC brushless drive controller
1
2
3
20
Electric motor
Power generator
Electric motor
Power generator
Electric motor
Power generator
Output and supply kinetic energy
Transformer
60
Transformer
60
Transformer
60
50
70
50
70
50
Voltage regulator (AVR)
Rectifier (outputs DC)
Voltage regulator (AVR)
Rectifier (outputs DC)
Voltage regulator (AVR)
Rectifier (outputs DC)
70
Transformer
60
Transformer
60
Transformer
60
Output AC power for use
Output AC power for use
Output AC power for use
Storage battery
Storage battery
Storage battery
30
30
30

FIG. 3

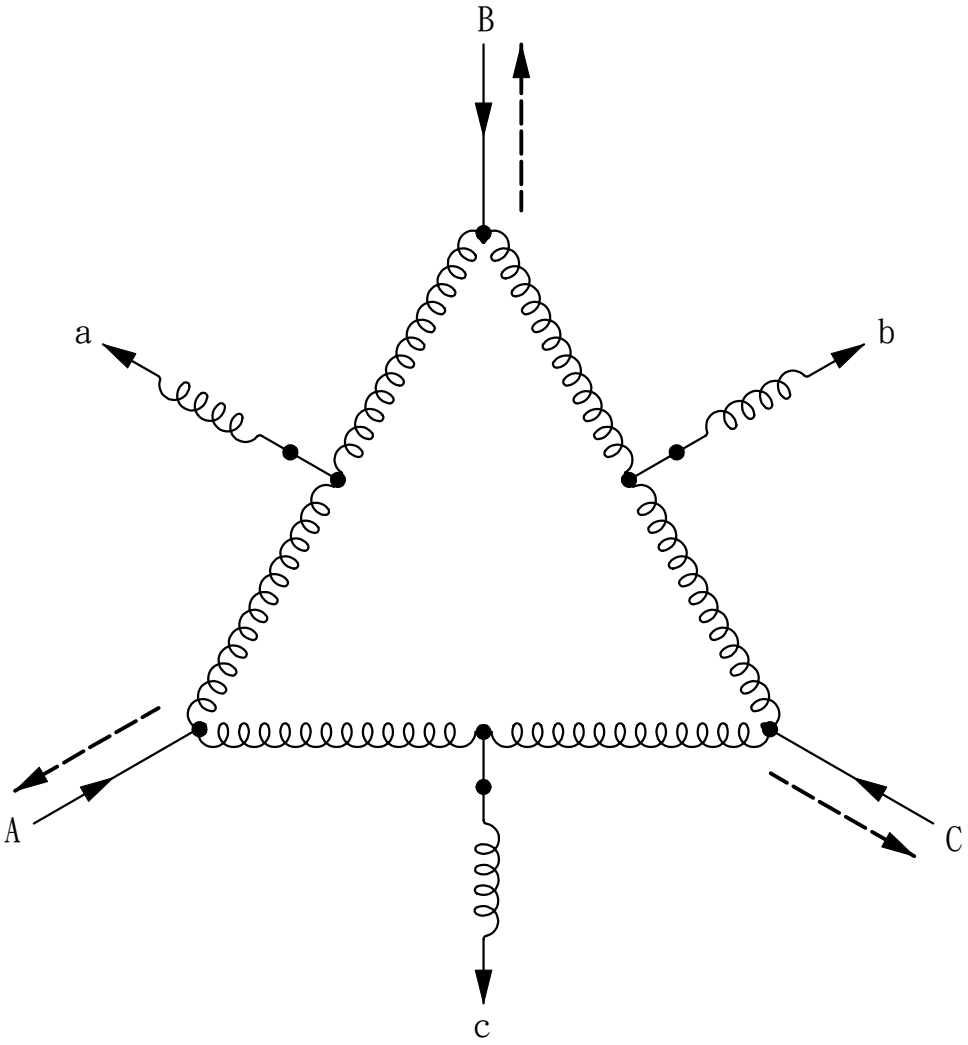

FIG. 4

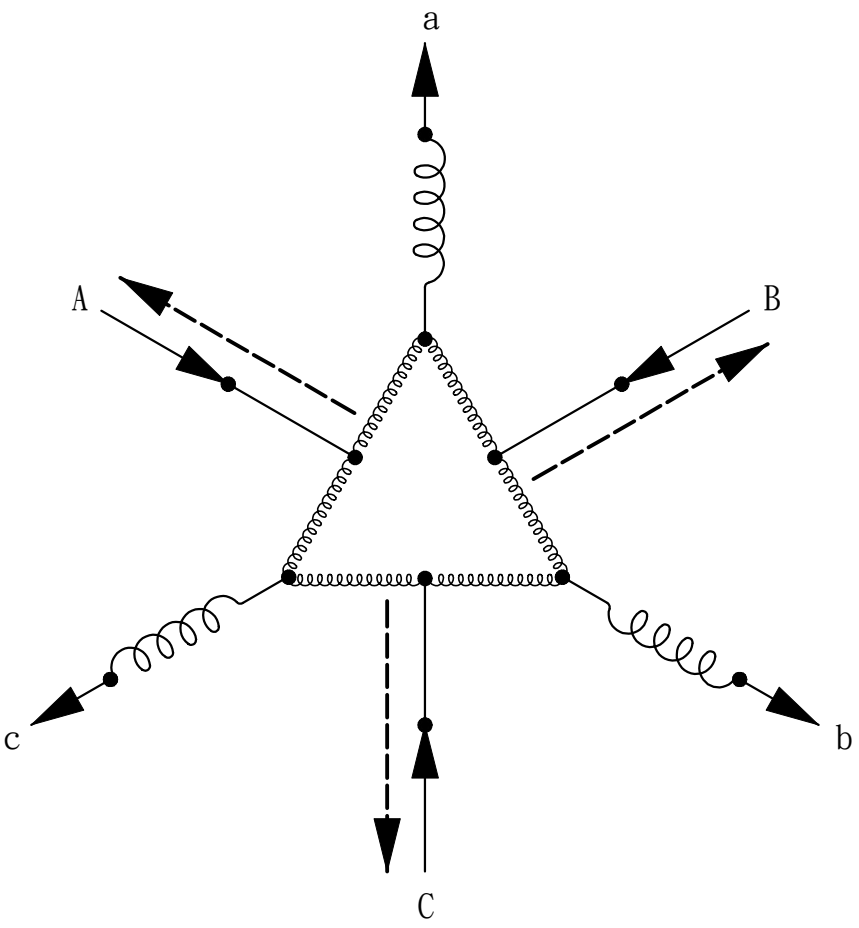

FIG. 5

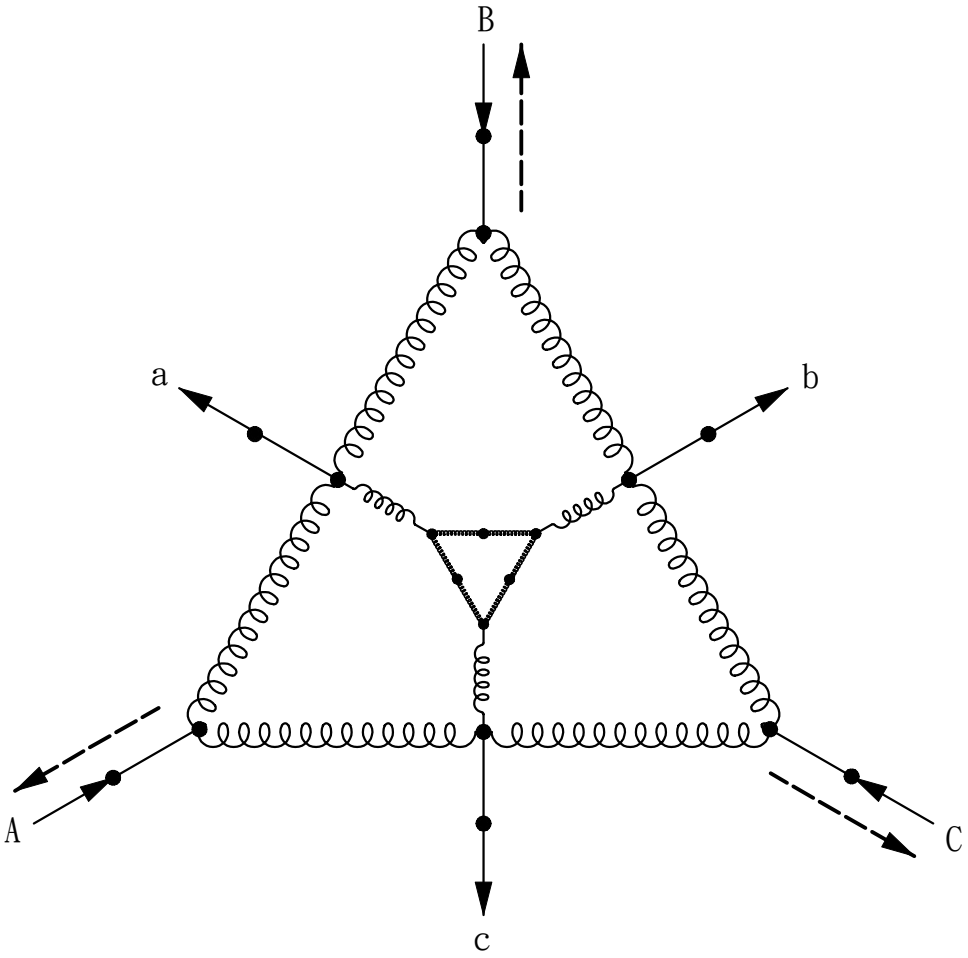

FIG. 6

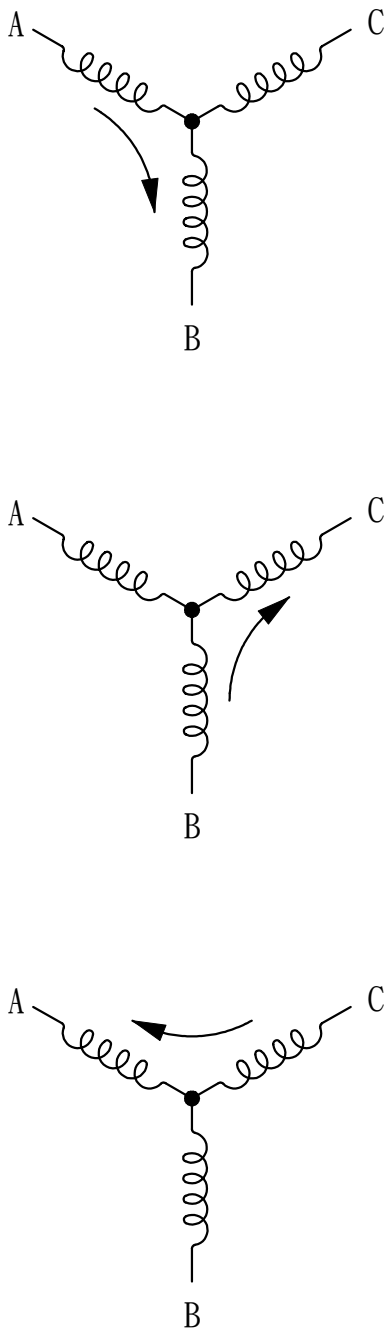

FIG. 7