(12) INTERNATIONAL APPLICATION PUBLISHED UNDER THE PATENT COOPERATION TREATY (PCT)

(19) World Intellectual Property Organization
International Bureau

(43) International Publication Date
18 March 2010 (18.03.2010)

PCT

(10) International Publication Number
WO 2010/030581 A1

(51) International Patent Classification:
G06F 21/00 (2006.01) *G06F 21/02* (2006.01)

(21) International Application Number:
PCT/US2009/056074

(22) International Filing Date:
4 September 2009 (04.09.2009)

(25) Filing Language: English

(26) Publication Language: English

(30) Priority Data:
12/208,626 11 September 2008 (11.09.2008) US

(71) Applicant *(for all designated States except US)*: **QUALCOMM Incorporated** [US/US]; Attn: International Ip Administration, 5775 Morehouse Drive, San Diego, California 92121 (US).

(72) Inventors; and

(75) Inventors/Applicants *(for US only)*: **SHIRLEN, Martyn Ryan** [US/US]; 5775 Morehouse Drive, San Diego, California 92121 (US). **HOFMANN, Richard Gerard** [US/US]; 5775 Morehouse Drive, San Diego, California 92121 (US).

(74) Agent: **KAMARCHIK, Peter**; 5775 Morehouse Drive, San Diego, California 92121 (US).

(81) Designated States *(unless otherwise indicated, for every kind of national protection available)*: AE, AG, AL, AM, AO, AT, AU, AZ, BA, BB, BG, BH, BR, BW, BY, BZ, CA, CH, CL, CN, CO, CR, CU, CZ, DE, DK, DM, DO, DZ, EC, EE, EG, ES, FI, GB, GD, GE, GH, GM, GT, HN, HR, HU, ID, IL, IN, IS, JP, KE, KG, KM, KN, KP, KR, KZ, LA, LC, LK, LR, LS, LT, LU, LY, MA, MD, ME, MG, MK, MN, MW, MX, MY, MZ, NA, NG, NI, NO, NZ, OM, PE, PG, PH, PL, PT, RO, RS, RU, SC, SD, SE, SG, SK, SL, SM, ST, SV, SY, TJ, TM, TN, TR, TT, TZ, UA, UG, US, UZ, VC, VN, ZA, ZM, ZW.

(84) Designated States *(unless otherwise indicated, for every kind of regional protection available)*: ARIPO (BW, GH, GM, KE, LS, MW, MZ, NA, SD, SL, SZ, TZ, UG, ZM, ZW), Eurasian (AM, AZ, BY, KG, KZ, MD, RU, TJ, TM), European (AT, BE, BG, CH, CY, CZ, DE, DK, EE, ES, FI, FR, GB, GR, HR, HU, IE, IS, IT, LT, LU, LV, MC, MK, MT, NL, NO, PL, PT, RO, SE, SI, SK, SM, TR), OAPI (BF, BJ, CF, CG, CI, CM, GA, GN, GQ, GW, ML, MR, NE, SN, TD, TG).

Declarations under Rule 4.17:

— *as to applicant's entitlement to apply for and be granted a patent (Rule 4.17(ii))*

— *as to the applicant's entitlement to claim the priority of the earlier application (Rule 4.17(iii))*

Published:

— *with international search report (Art. 21(3))*

(54) **Title**: METHOD FOR SECURELY COMMUNICATING INFORMATION ABOUT THE LOCATION OF A COMPROMISED COMPUTING DEVICE

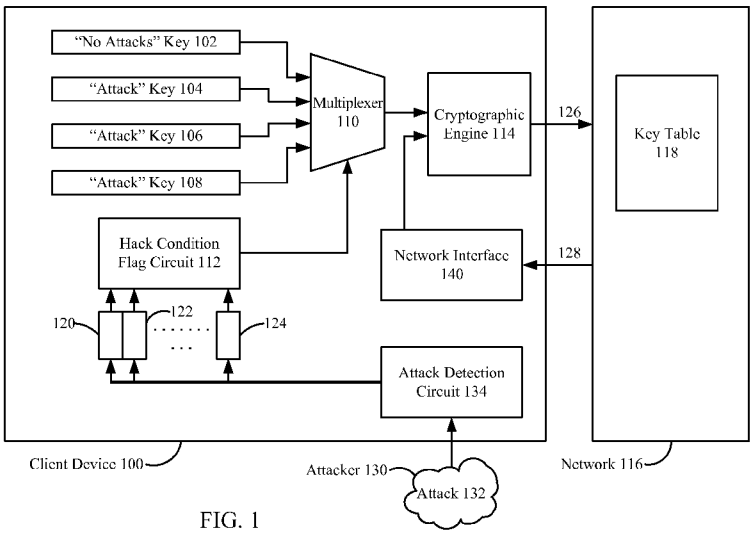

FIG. 1

(57) **Abstract**: A method for securely reporting location information after an attack on a computing device is presented. Such information may be reported to a requesting entity in a manner almost transparent to an attacker. Several exemplary embodiments of systems wherein the method may be used are presented.

WO 2010/030581 A1