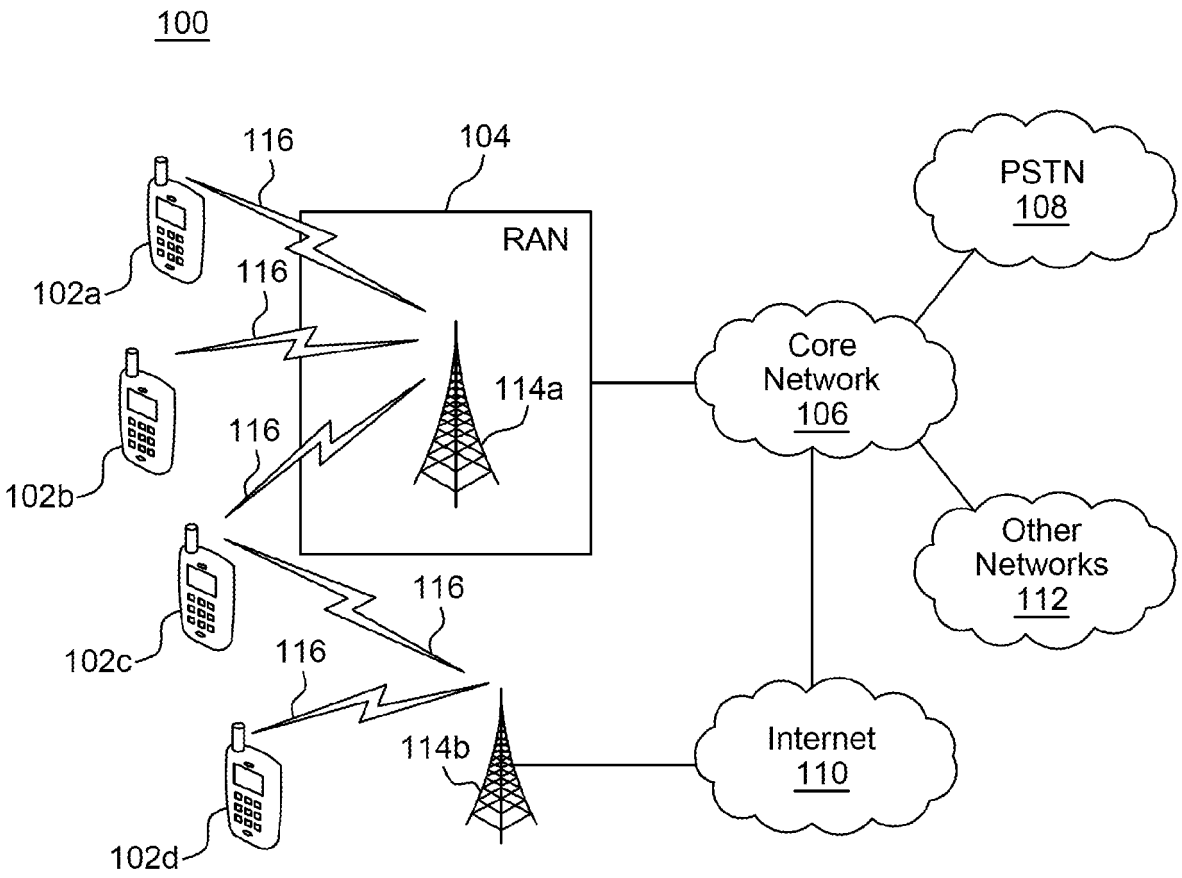
100
116
104
RAN
PSTN
108
102a
116
Core
Network
106
114a
116
102b
Other
Networks
112
116
102c
116
114b
Internet
110
102d

FIG. 1A

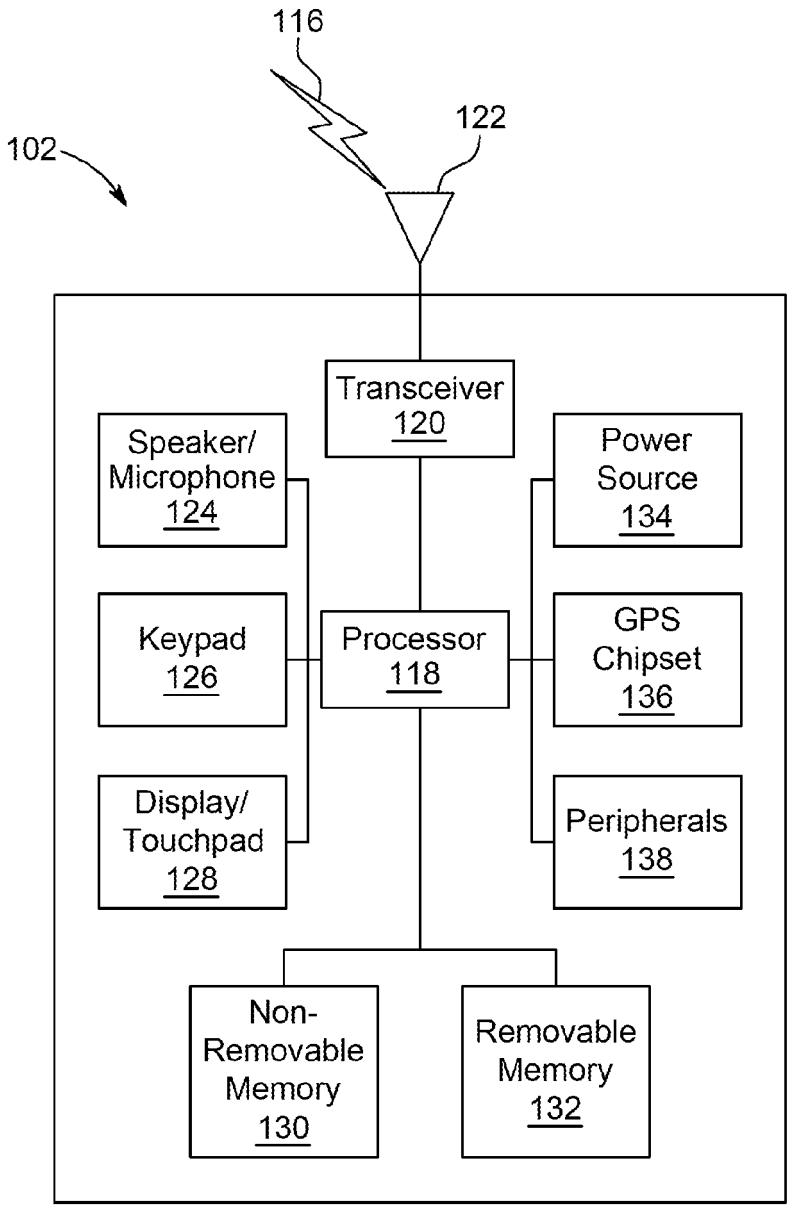
116
122
102
Transceiver
120
Speaker/
Microphone
124
Power
Source
134
Keypad
126
Processor
118
GPS
Chipset
136
Display/
Touchpad
128
Peripherals
138
Non-
Removable
Memory
130
Removable
Memory
132

FIG. 1B

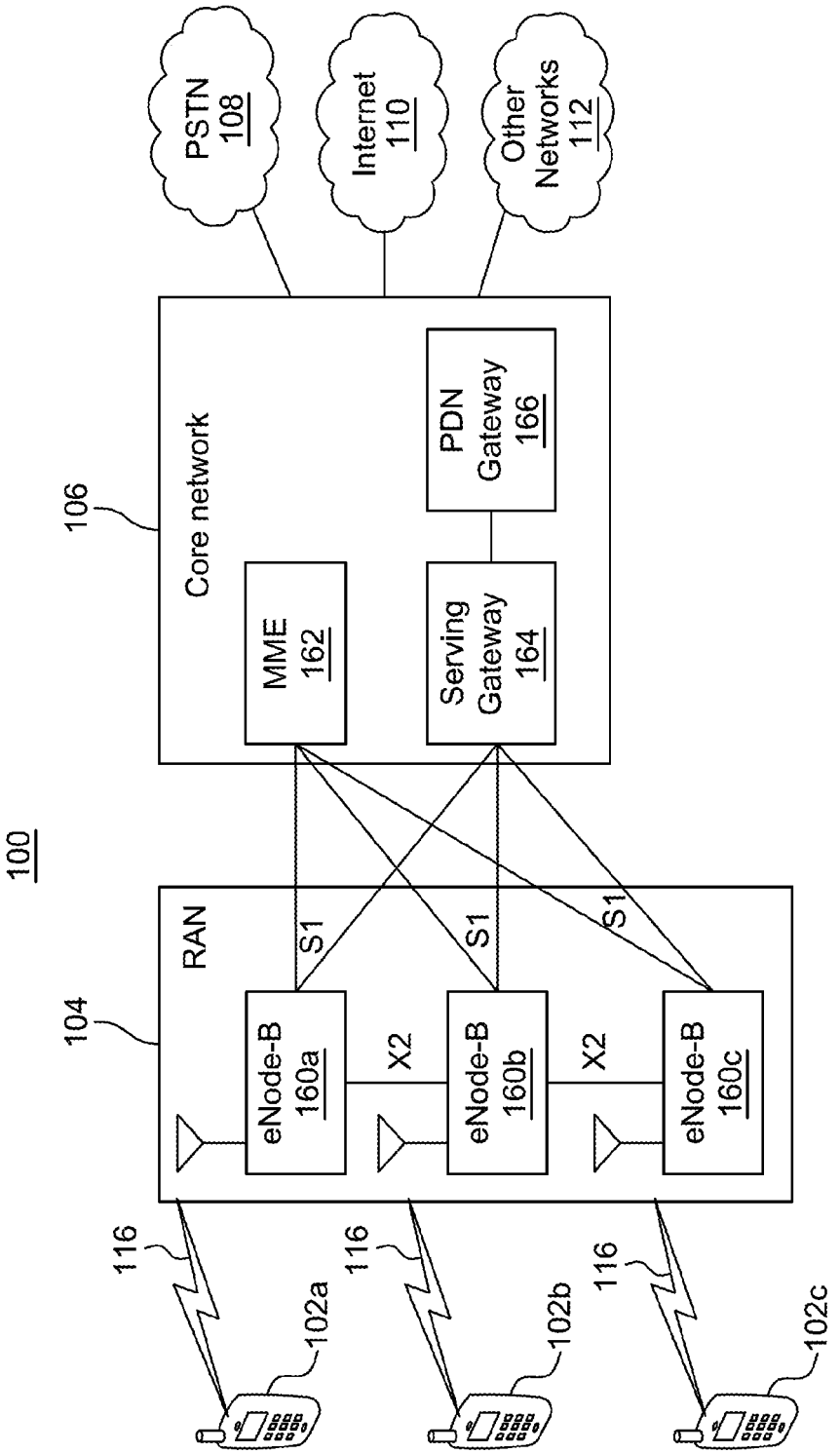
PSTN 108
Internet 110
Other Networks 112
Core network
106
PDN Gateway 166
MME 162
Serving Gateway 164
100
RAN
104
S1
S1
S1
eNode-B 160a
eNode-B 160b
eNode-B 160c
X2
X2
116
116
116
102a
102b
102c

FIG. 1C

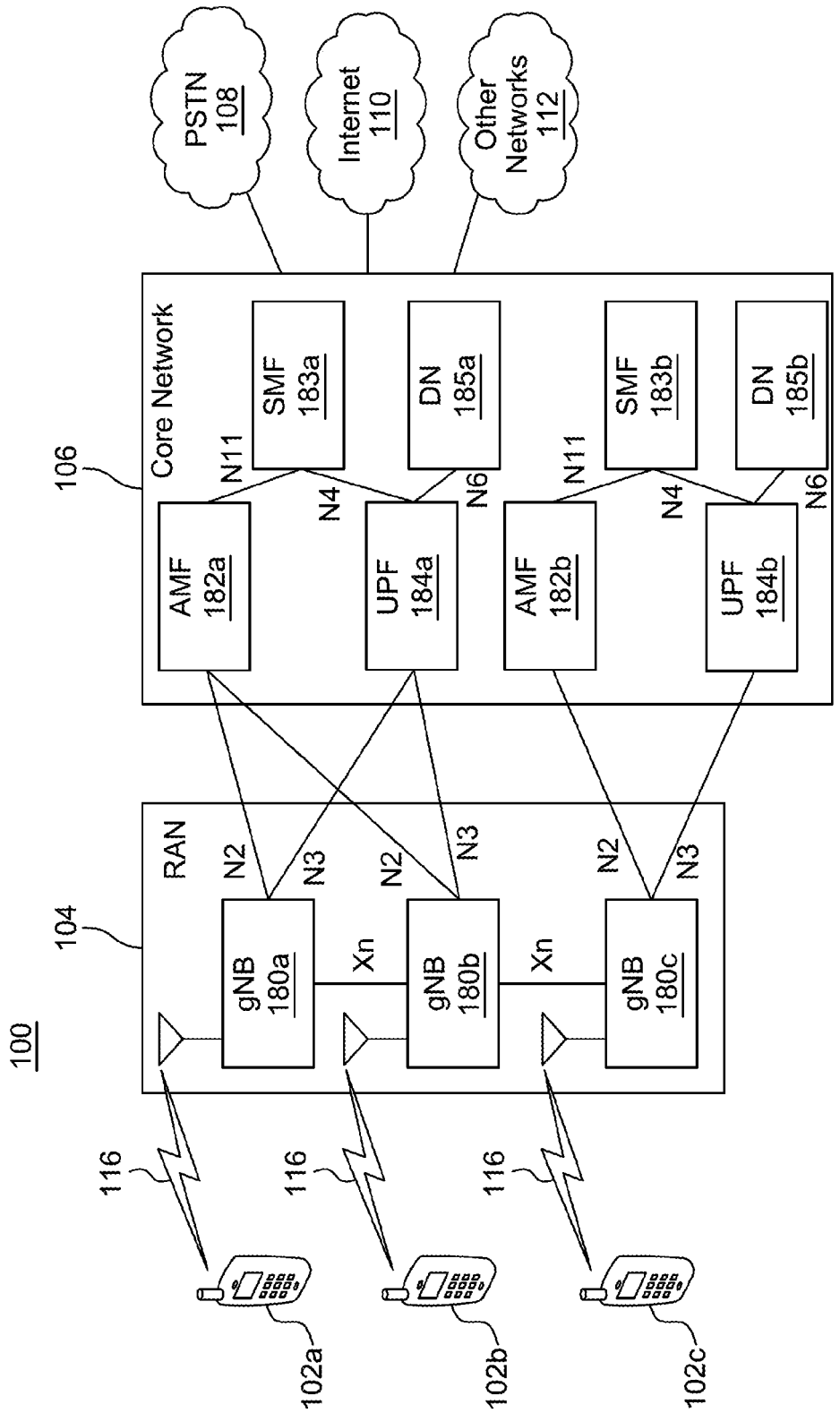
PSTN 108
Internet 110
Other Networks 112
Core Network
106
SMF 183a
DN 185a
SMF 183b
DN 185b
N11
N4
N6
AMF 182a
UPF 184a
AMF 182b
UPF 184b
RAN
104
N2
N3
gNB 180a
gNB 180b
gNB 180c
Xn
100
116
102a
102b
102c

FIG. 1D

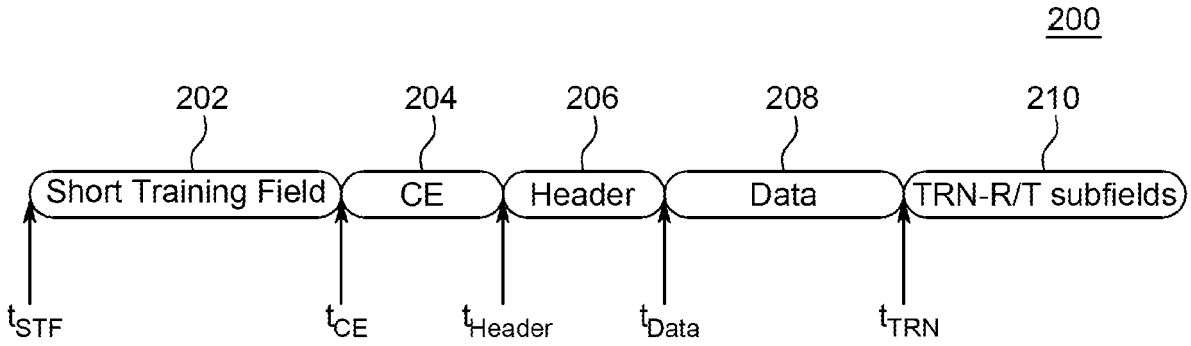
200
202
204
206
208
210
Short Training Field
CE
Header
Data
TRN-R/T subfields
$t_{STF}$
$t_{CE}$
$t_{Header}$
$t_{Data}$
$t_{TRN}$

FIG. 2

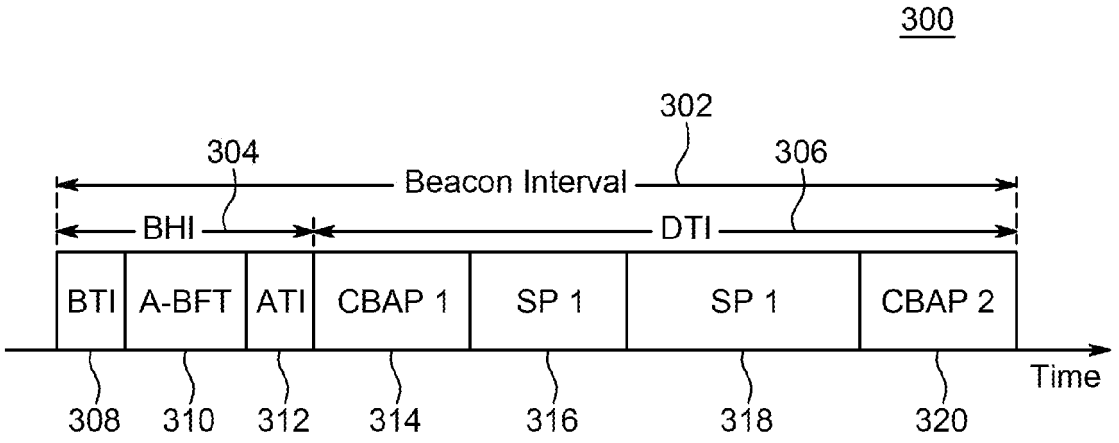
300
302
304
306
Beacon Interval
BHI
DTI
BTI
A-BFT
ATI
CBAP 1
SP 1
SP 1
CBAP 2
Time
308
310
312
314
316
318
320

FIG. 3

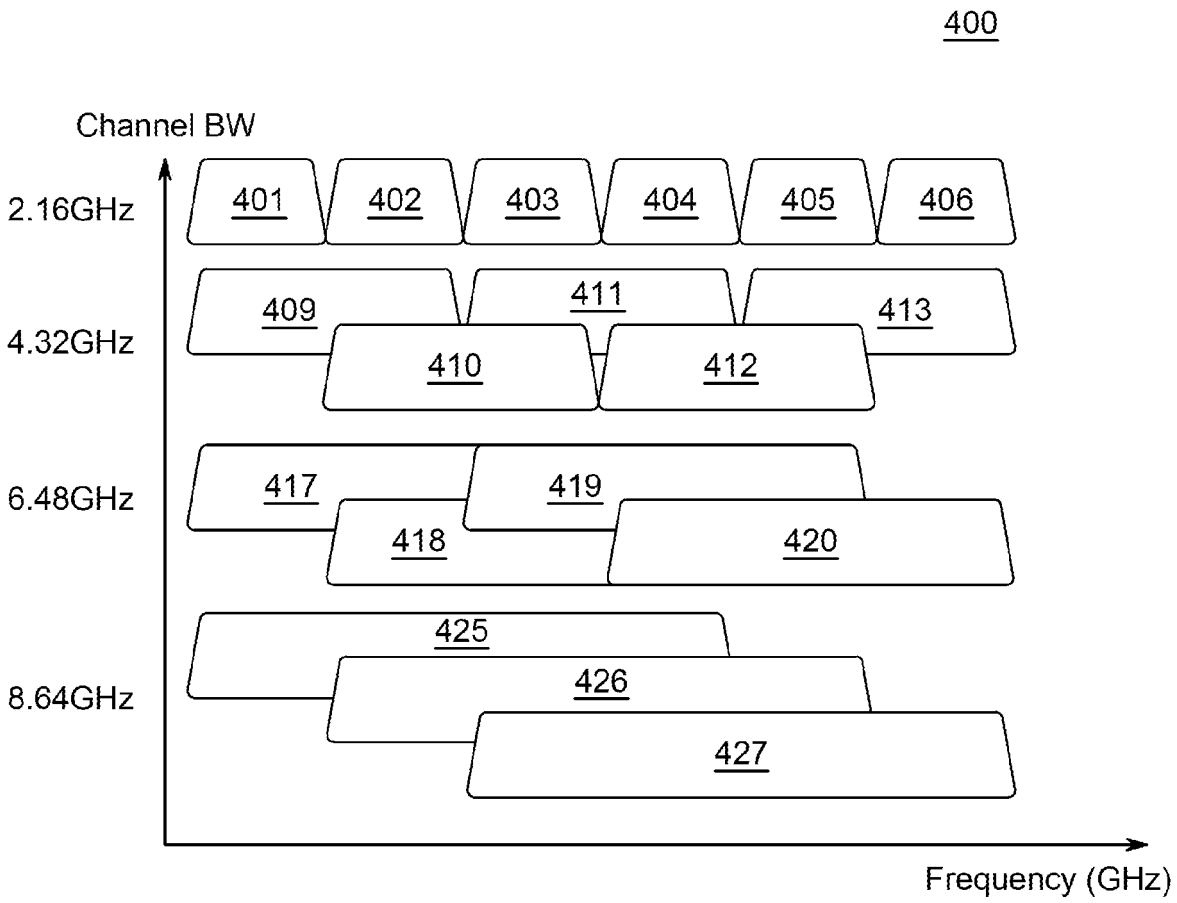
400
Channel BW
2.16GHz
4.32GHz
6.48GHz
8.64GHz
401
402
403
404
405
406
409
411
413
410
412
417
419
418
420
425
426
427
Frequency (GHz)

FIG. 4

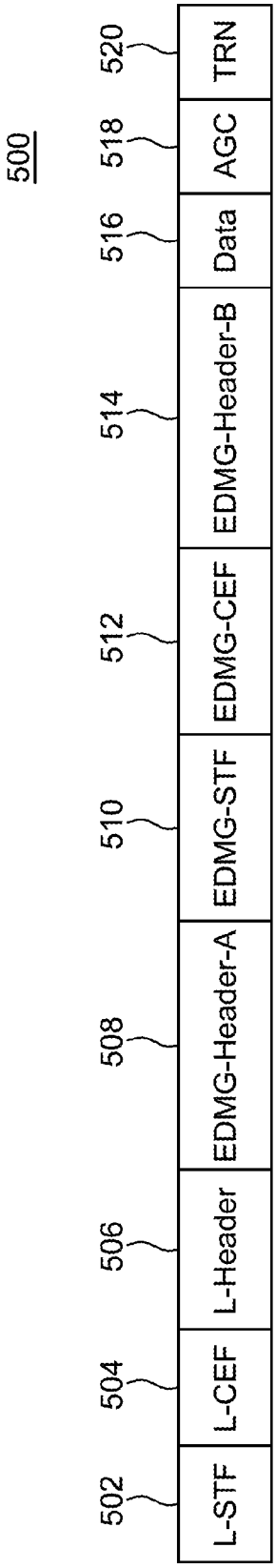
500
502
L-STF
504
L-CEF
506
L-Header
508
EDMG-Header-A
510
EDMG-STF
512
EDMG-CEF
514
EDMG-Header-B
516
Data
518
AGC
520
TRN

FIG. 5

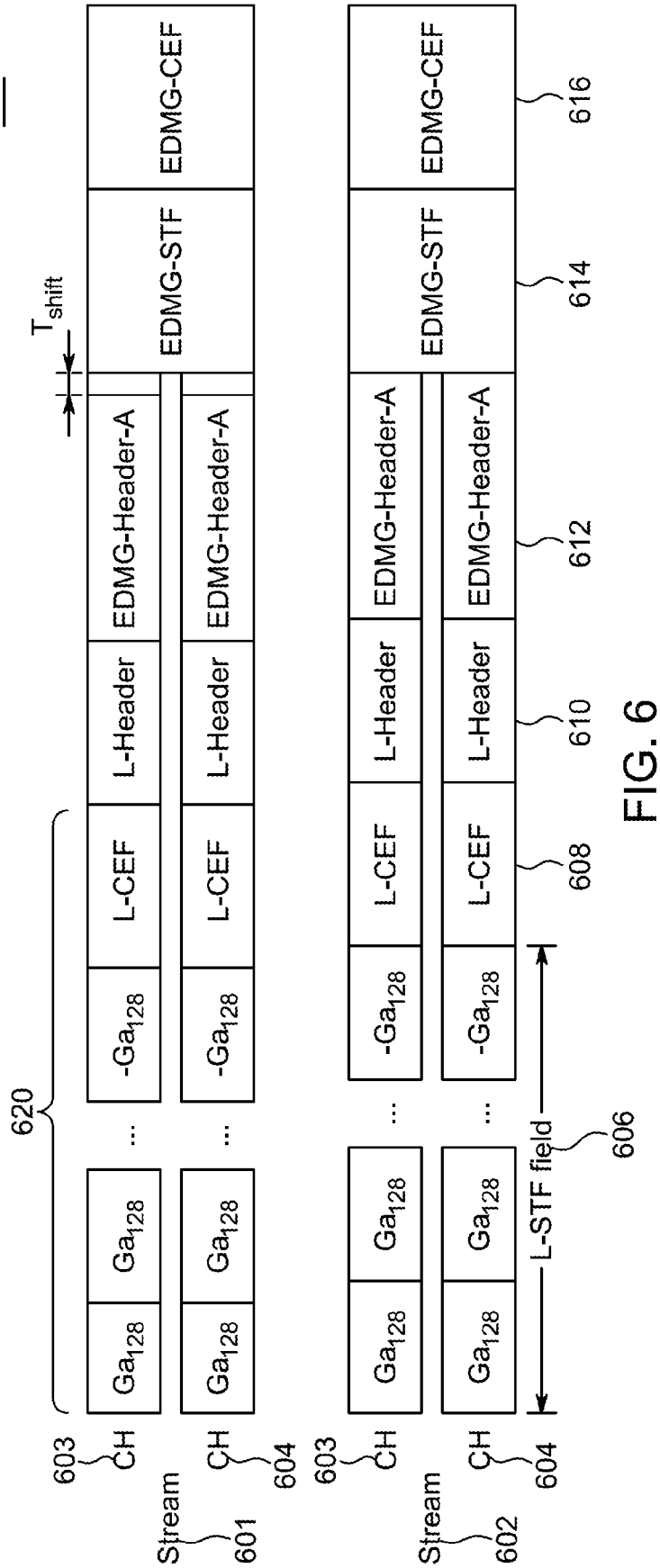
600
Stream
601
602
603
CH
604
620
Ga128
-Ga128
L-CEF
L-Header
EDMG-Header-A
EDMG-STF
EDMG-CEF
Tshift
L-STF field
606
608
610
612
614
616

FIG. 6

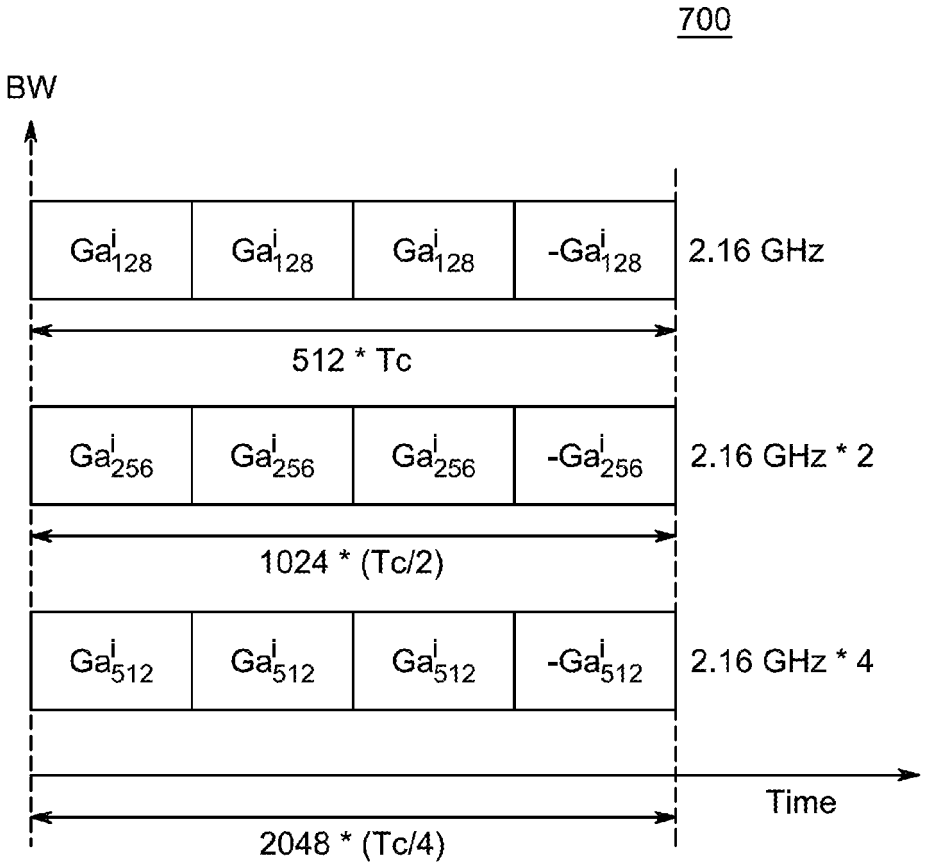
700
BW
$Ga^i_{128}$
$Ga^i_{128}$
$Ga^i_{128}$
$-Ga^i_{128}$
2.16 GHz
512 * Tc
$Ga^i_{256}$
$Ga^i_{256}$
$Ga^i_{256}$
$-Ga^i_{256}$
2.16 GHz * 2
1024 * (Tc/2)
$Ga^i_{512}$
$Ga^i_{512}$
$Ga^i_{512}$
$-Ga^i_{512}$
2.16 GHz * 4
Time
2048 * (Tc/4)

FIG. 7

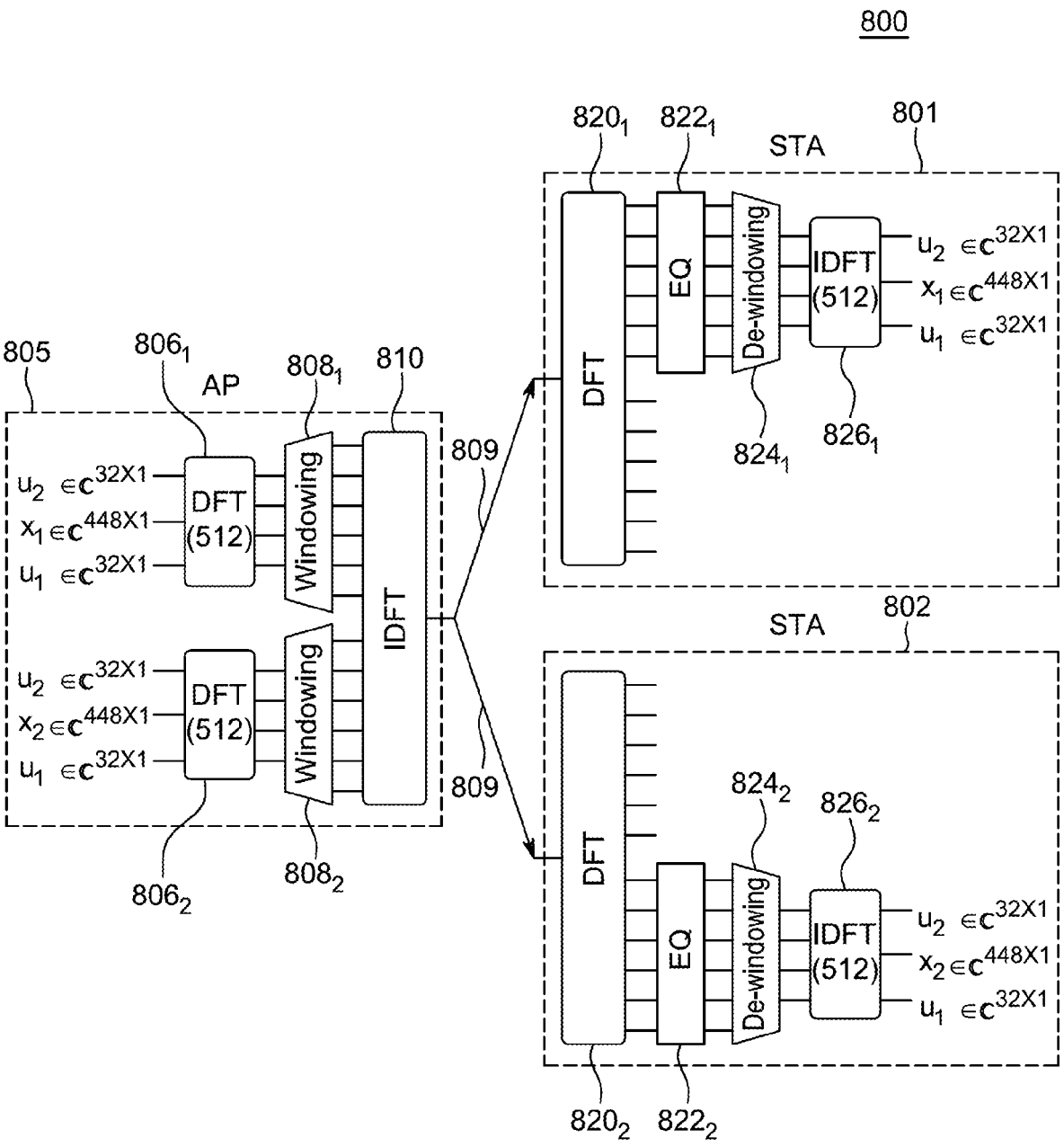
800
820$_1$
822$_1$
801
STA
DFT
EQ
De-windowing
IDFT (512)
$u_2 \in \mathbb{C}^{32X1}$
$x_1 \in \mathbb{C}^{448X1}$
$u_1 \in \mathbb{C}^{32X1}$
824$_1$
826$_1$
805
806$_1$
AP
808$_1$
810
809
DFT (512)
Windowing
IDFT
$u_2 \in \mathbb{C}^{32X1}$
$x_1 \in \mathbb{C}^{448X1}$
$u_1 \in \mathbb{C}^{32X1}$
802
STA
$x_2 \in \mathbb{C}^{448X1}$
824$_2$
826$_2$
806$_2$
808$_2$
820$_2$
822$_2$

FIG. 8

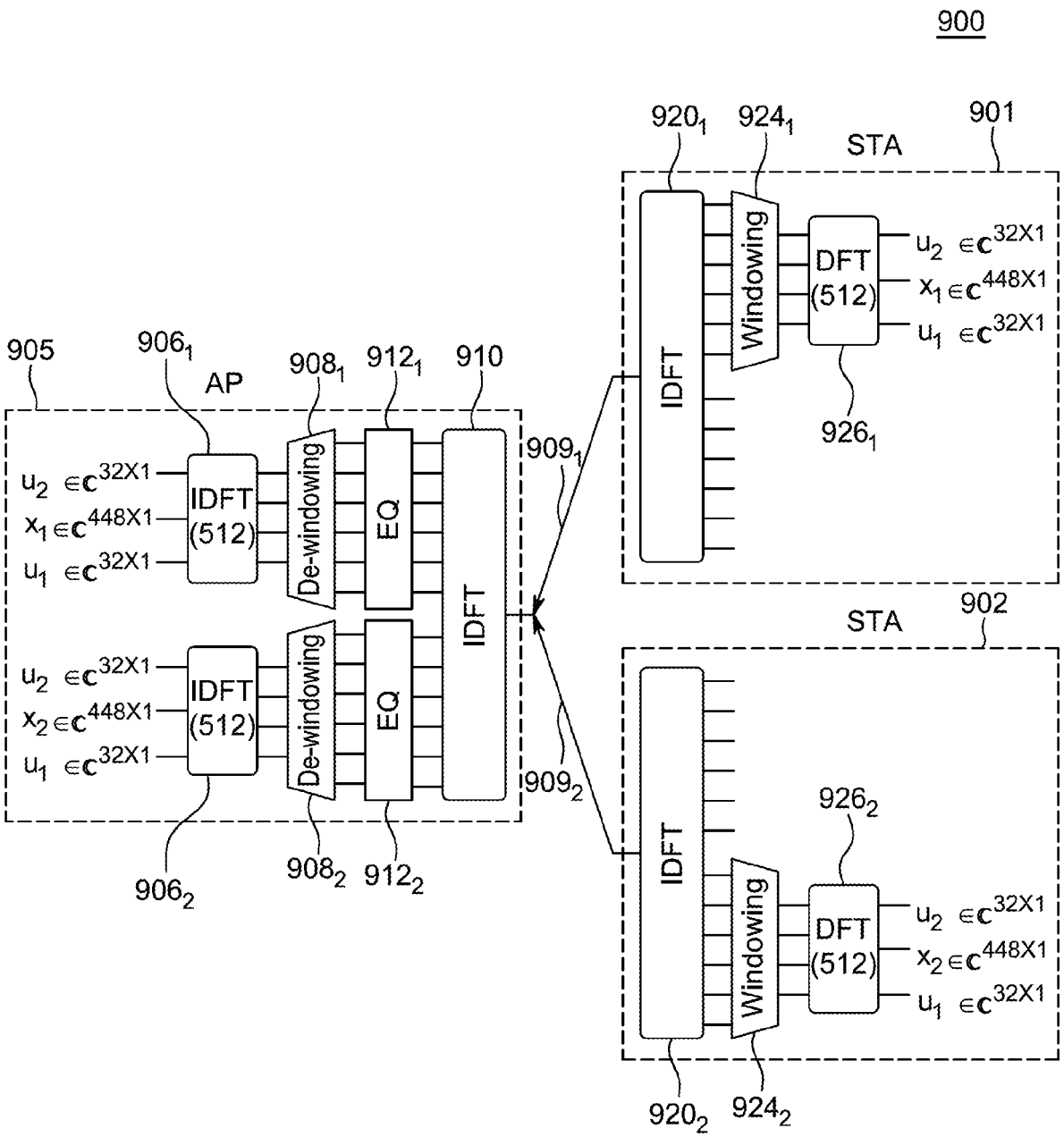
900
905
AP
$906_1$
$908_1$
$912_1$
910
$909_1$
$909_2$
$906_2$
$908_2$
$912_2$
$u_2 \in \mathbb{C}^{32X1}$
$x_1 \in \mathbb{C}^{448X1}$
$u_1 \in \mathbb{C}^{32X1}$
$x_2 \in \mathbb{C}^{448X1}$
IDFT (512)
De-windowing
EQ
IDFT
$920_1$
$924_1$
STA
901
Windowing
DFT (512)
$926_1$
$926_2$
902
$920_2$
$924_2$

FIG. 9

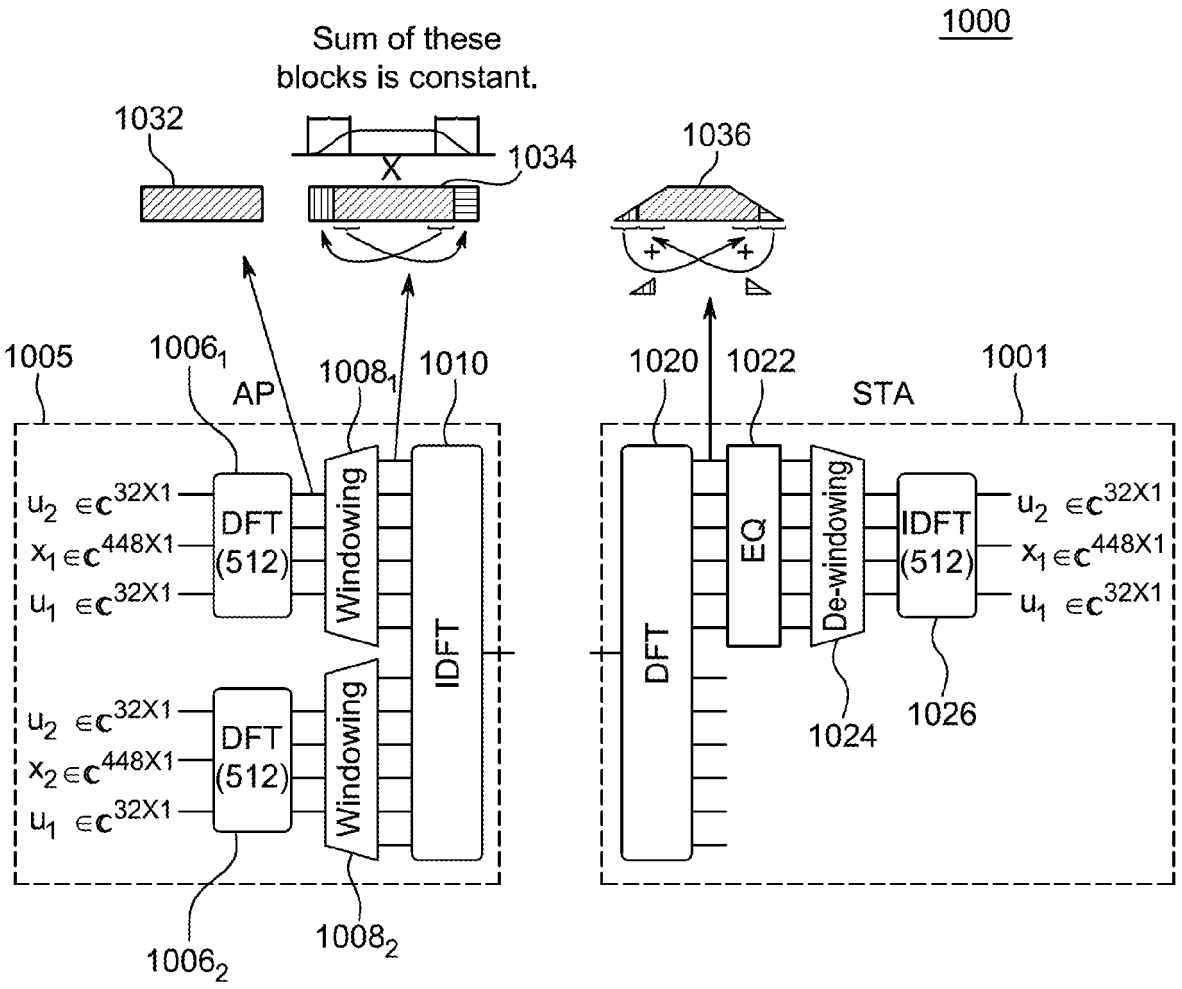
1000
Sum of these blocks is constant.
1032
1034
1036
1005
1006$_1$
AP
1008$_1$
1010
1020
1022
1001
STA
$u_2 \in \mathbb{C}^{32X1}$
$x_1 \in \mathbb{C}^{448X1}$
$u_1 \in \mathbb{C}^{32X1}$
DFT (512)
Windowing
IDFT
EQ
De-windowing
IDFT (512)
$u_2 \in \mathbb{C}^{32X1}$
$x_1 \in \mathbb{C}^{448X1}$
$u_1 \in \mathbb{C}^{32X1}$
$u_2 \in \mathbb{C}^{32X1}$
$x_2 \in \mathbb{C}^{448X1}$
$u_1 \in \mathbb{C}^{32X1}$
DFT (512)
Windowing
IDFT
DFT
1024
1026
1006$_2$
1008$_2$

FIG. 10

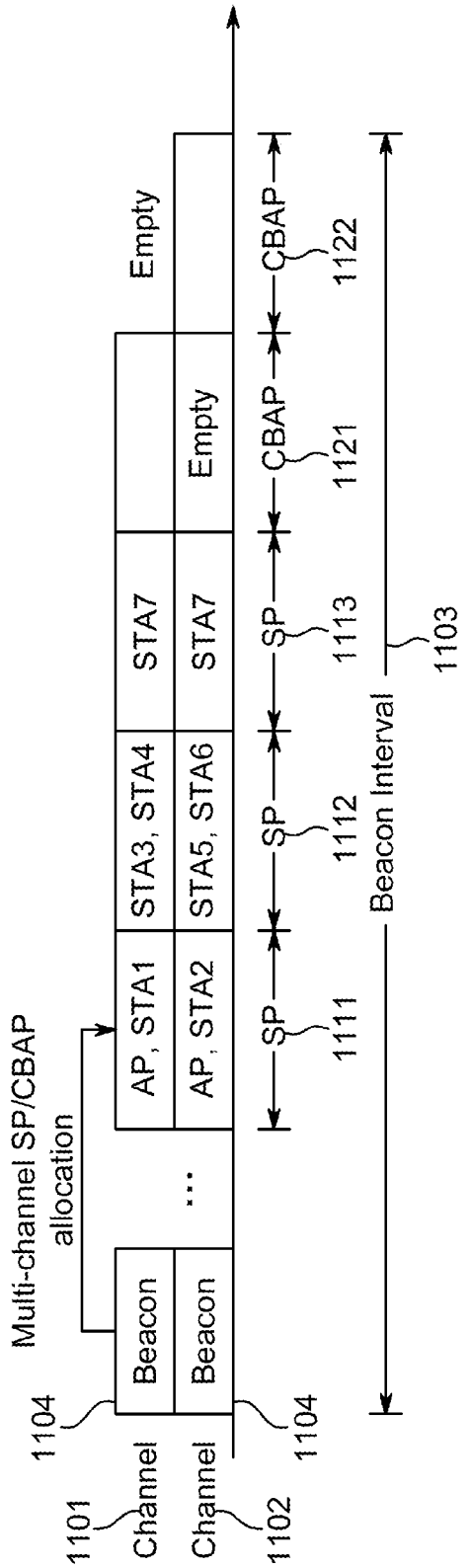
1100
Multi-channel SP/CBAP allocation
Beacon
Beacon
AP, STA1
AP, STA2
STA3, STA4
STA5, STA6
STA7
STA7
Empty
Empty
CBAP
CBAP
SP
SP
SP
1104
1104
1101
1102
Channel
Channel
1111
1112
1113
1121
1122
1103
Beacon Interval

FIG. 11

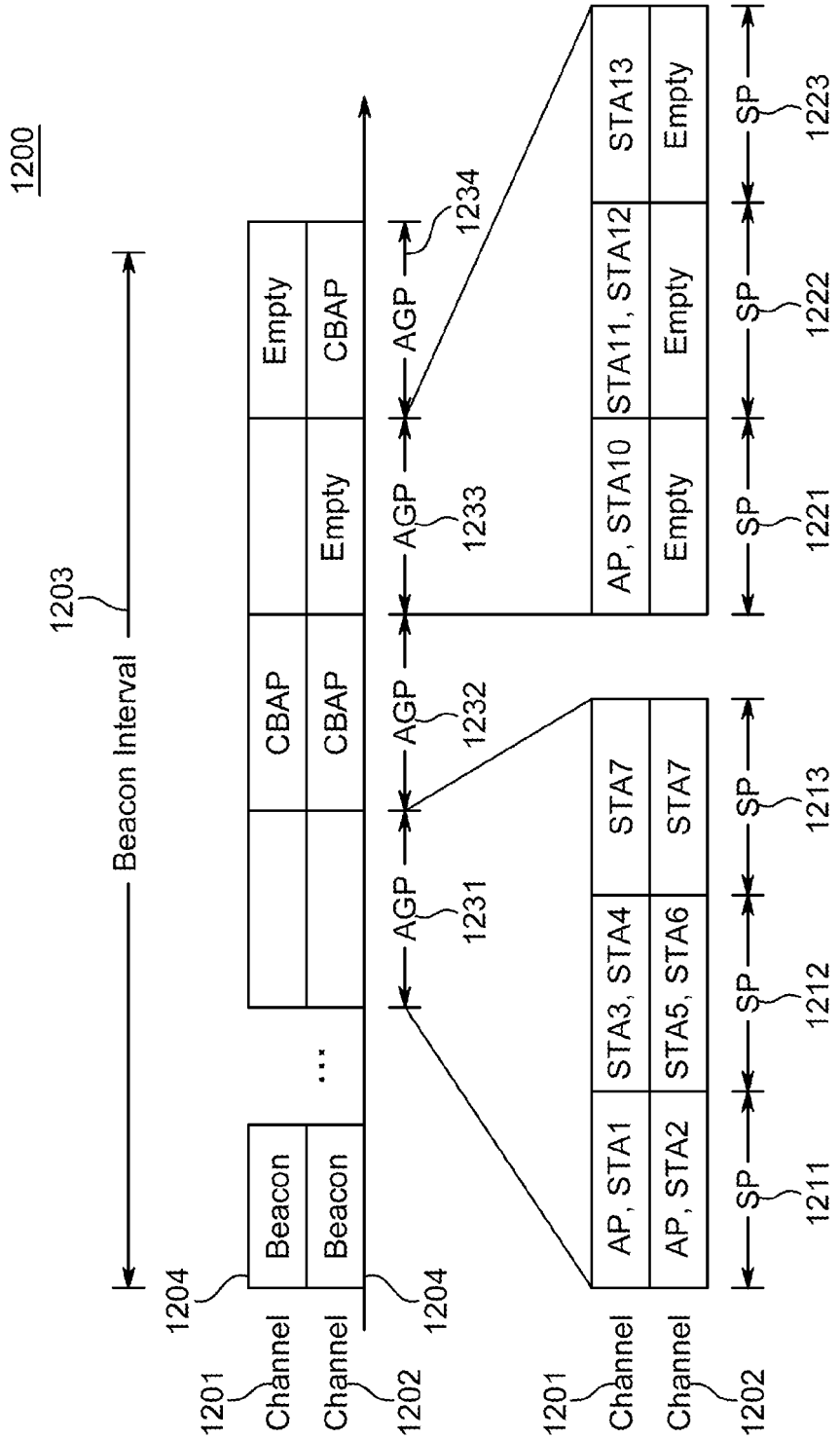
1200
1203
Beacon Interval
1204
1204
Beacon
Beacon
CBAP
CBAP
Empty
Empty
CBAP
Empty
AGP
AGP
AGP
AGP
1231
1232
1233
1234
1201
Channel
1202
Channel
AP, STA1
AP, STA2
STA3, STA4
STA5, STA6
STA7
STA7
AP, STA10
Empty
STA11, STA12
Empty
STA13
Empty
SP
SP
SP
SP
SP
SP
1211
1212
1213
1221
1222
1223

FIG. 12

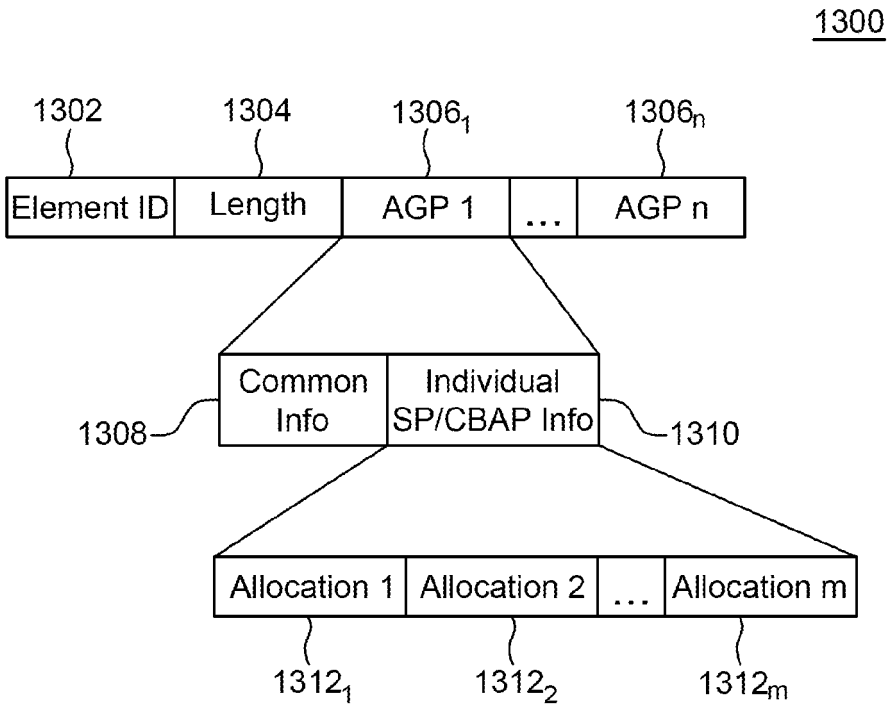
1300
1302
1304
1306$_1$
1306$_n$
Element ID
Length
AGP 1
...
AGP n
Common Info
Individual SP/CBAP Info
1308
1310
Allocation 1
Allocation 2
...
Allocation m
1312$_1$
1312$_2$
1312$_m$

FIG. 13

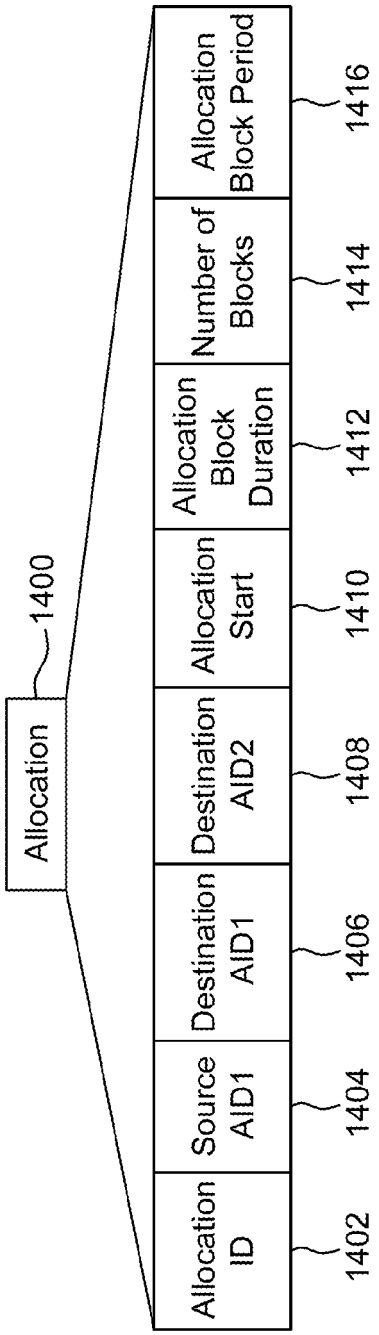
Allocation
1400
Allocation ID
1402
Source AID1
1404
Destination AID1
1406
Destination AID2
1408
Allocation Start
1410
Allocation Block Duration
1412
Number of Blocks
1414
Allocation Block Period
1416

FIG. 14

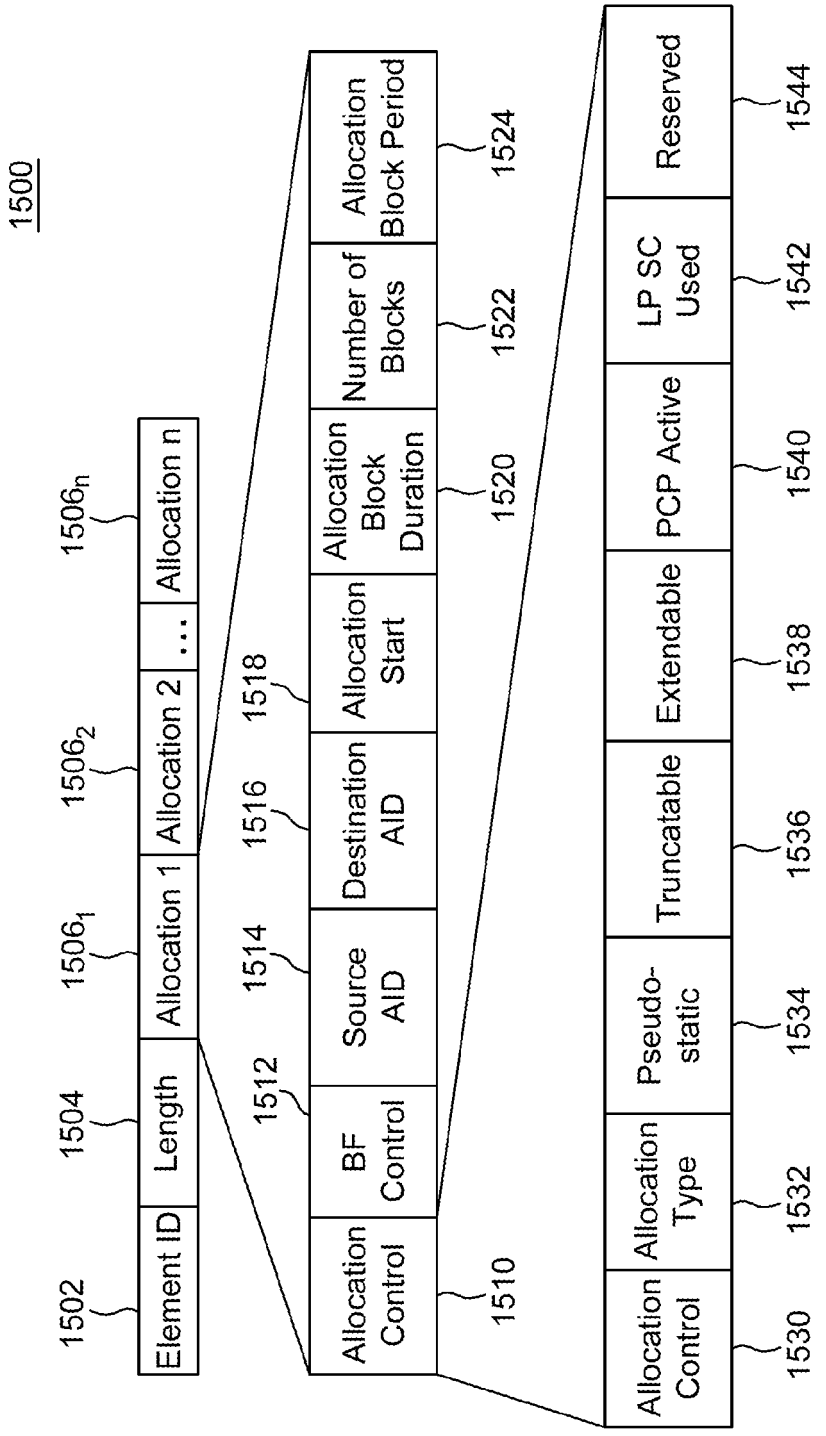
1500
Element ID
Length
Allocation 1
Allocation 2
...
Allocation n
1502
1504
1506$_1$
1506$_2$
1506$_n$
Allocation Control
BF Control
Source AID
Destination AID
Allocation Start
Allocation Block Duration
Number of Blocks
Allocation Block Period
1510
1512
1514
1516
1518
1520
1522
1524
Allocation Control
Allocation Type
Pseudo-static
Truncatable
Extendable
PCP Active
LP SC Used
Reserved
1530
1532
1534
1536
1538
1540
1542
1544

FIG. 15

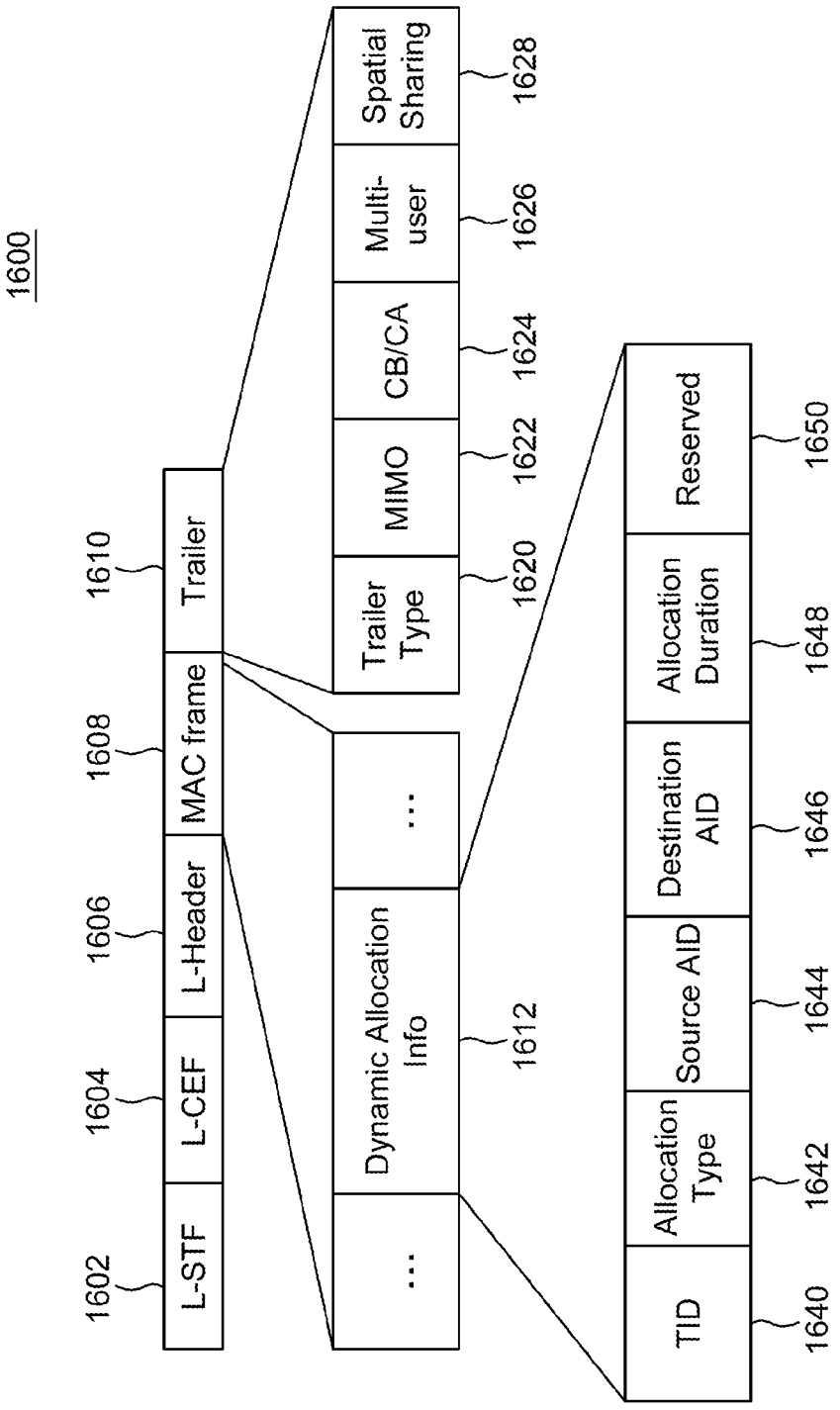
1600
L-STF
L-CEF
L-Header
MAC frame
Trailer
1602
1604
1606
1608
1610
...
Dynamic Allocation Info
...
1612
Trailer Type
MIMO
CB/CA
Multi-user
Spatial Sharing
1620
1622
1624
1626
1628
TID
Allocation Type
Source AID
Destination AID
Allocation Duration
Reserved
1640
1642
1644
1646
1648
1650

FIG. 16

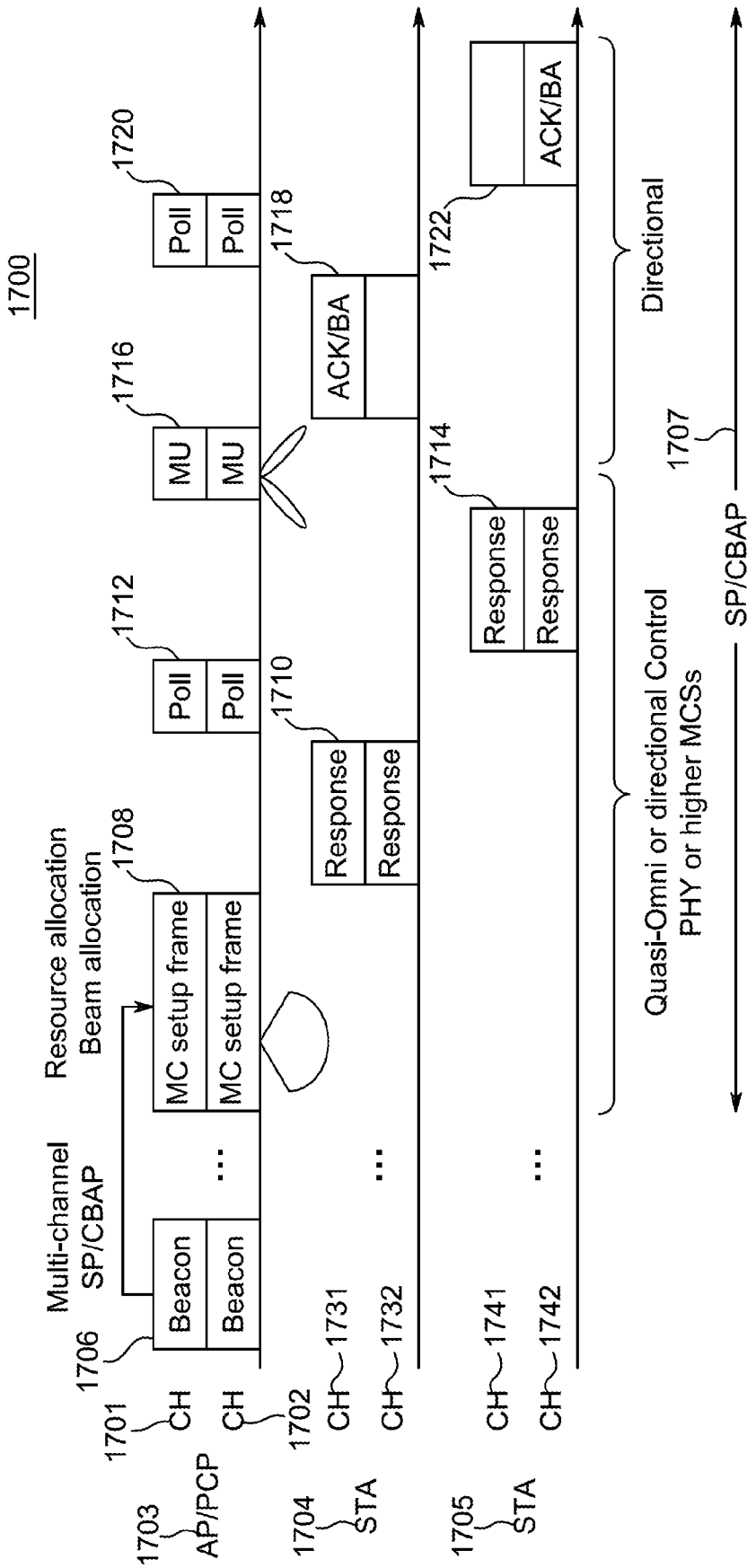
1700
Multi-channel SP/CBAP
Resource allocation
Beam allocation
1706
1701
CH
1702
CH
1703
AP/PCP
1704
STA
1705
STA
Beacon
Beacon
MC setup frame
MC setup frame
1708
Poll
Poll
1712
Response
Response
1710
MU
MU
1716
ACK/BA
1718
Poll
Poll
1720
Response
Response
1714
ACK/BA
1722
1731
1732
1741
1742
Quasi-Omni or directional Control
PHY or higher MCSs
Directional
1707
SP/CBAP

FIG. 17

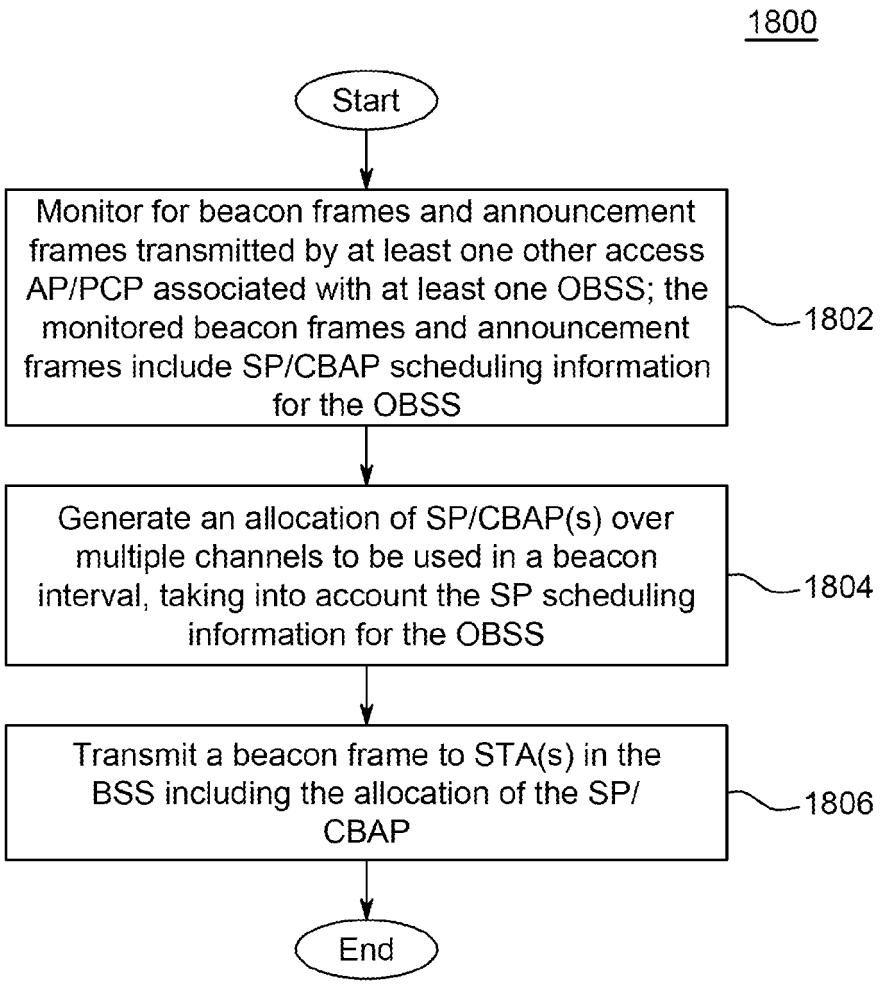
1800
Start
Monitor for beacon frames and announcement frames transmitted by at least one other access AP/PCP associated with at least one OBSS; the monitored beacon frames and announcement frames include SP/CBAP scheduling information for the OBSS
1802
Generate an allocation of SP/CBAP(s) over multiple channels to be used in a beacon interval, taking into account the SP scheduling information for the OBSS
1804
Transmit a beacon frame to STA(s) in the BSS including the allocation of the SP/ CBAP
1806
End

FIG. 18