(12) INTERNATIONAL APPLICATION PUBLISHED UNDER THE PATENT COOPERATION TREATY (PCT)

(19) World Intellectual Property Organization
International Bureau

(43) International Publication Date
28 October 2004 (28.10.2004)

PCT

(10) International Publication Number
WO 2004/092557 A2

(51) International Patent Classification[7]: F02C

(21) International Application Number:
PCT/US2004/011449

(22) International Filing Date: 14 April 2004 (14.04.2004)

(25) Filing Language: English

(26) Publication Language: English

(30) Priority Data:
60/462,993 14 April 2003 (14.04.2003) US

(71) Applicant *(for all designated States except US)*: **CLEAN ENERGY, INC.** [US/US]; 345 Sheridan Avenue, Suite 101, Palo Alto, CA 94306 (US).

(72) Inventor; and

(75) Inventor/Applicant *(for US only)*: **KLOSTERMANN, Heinrich, Franz** [DE/US]; 190 C West Hillsdale boulevard, San Mateo, CA 94403 (US).

(74) Agent: **WRIGHT, Edward, S.**; Law Offices of Edward S. Wright, 1100 Alma Street, Suite 207, Menlo Park, CA 94025 (US).

(81) Designated States *(unless otherwise indicated, for every kind of national protection available)*: AE, AG, AL, AM, AT, AU, AZ, BA, BB, BG, BR, BW, BY, BZ, CA, CH, CN, CO, CR, CU, CZ, DE, DK, DM, DZ, EC, EE, EG, ES, FI, GB, GD, GE, GH, GM, HR, HU, ID, IL, IN, IS, JP, KE, KG, KP, KR, KZ, LC, LK, LR, LS, LT, LU, LV, MA, MD, MG, MK, MN, MW, MX, MZ, NA, NI, NO, NZ, OM, PG, PH, PL, PT, RO, RU, SC, SD, SE, SG, SK, SL, SY, TJ, TM, TN, TR, TT, TZ, UA, UG, US, UZ, VC, VN, YU, ZA, ZM, ZW.

(84) Designated States *(unless otherwise indicated, for every kind of regional protection available)*: ARIPO (BW, GH, GM, KE, LS, MW, MZ, SD, SL, SZ, TZ, UG, ZM, ZW), Eurasian (AM, AZ, BY, KG, KZ, MD, RU, TJ, TM), European (AT, BE, BG, CH, CY, CZ, DE, DK, EE, ES, FI, FR, GB, GR, HU, IE, IT, LU, MC, NL, PL, PT, RO, SE, SI, SK, TR), OAPI (BF, BJ, CF, CG, CI, CM, GA, GN, GQ, GW, ML, MR, NE, SN, TD, TG).

Published:
— *without international search report and to be republished upon receipt of that report*

For two-letter codes and other abbreviations, refer to the "Guidance Notes on Codes and Abbreviations" appearing at the beginning of each regular issue of the PCT Gazette.

(54) Title: INTERNAL EXPLOSION ENGINE AND GENERATOR USING NON-COMBUSTIBLE GASES

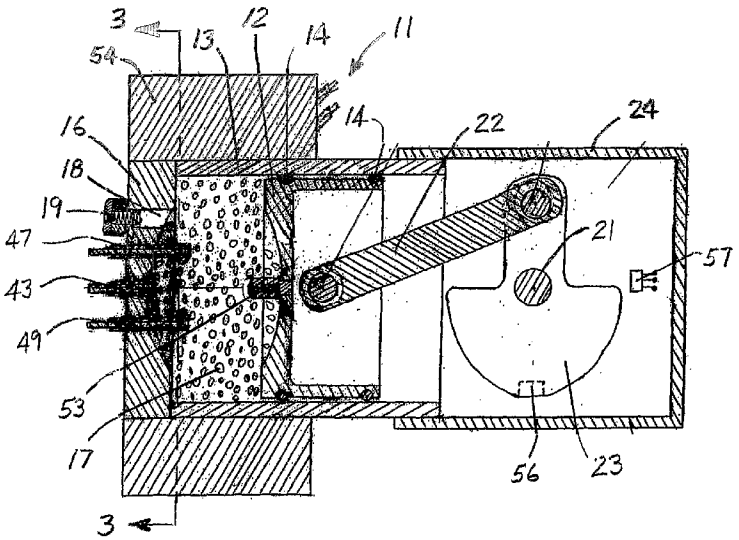

(57) Abstract: Internal explosion engine and generator having an explosion chamber, a movable member forming one wall of the chamber, a charge of non-combustible gas sealed inside the chamber, means for repeatedly igniting the gas in an explosive matter to drive the movable member form a position of minimum volume to portion of maximum volume, means for returning the movable member from the position of maximum volume to the position of minimum volume, and means coupled to the movable member for providing electrical energy in response to explosion of the gas. In one disclosed embodiment, the movable member is a piston connected to a crankshaft, and it is returned to the position of minimum volume by a flywheel on the crankshaft. In another, two pistons are connected back-to-back in a hermetically sealed chamber to prevent loss of the explosive gas. In one embodiment, the electrical energy is produced by a generator connected to the crankshaft, and in the other it is produced by a coil positioned near a magnet which moves with the pistons.

WO 2004/092557 A2