(12) INTERNATIONAL APPLICATION PUBLISHED UNDER THE PATENT COOPERATION TREATY (PCT)

CORRECTED VERSION

(19) World Intellectual Property Organization
International Bureau

(43) International Publication Date
4 April 2013 (04.04.2013)

WIPO | PCT

(10) International Publication Number
WO 2013/049702 A9

(51) International Patent Classification:
B01L 7/00 (2006.01) *C12Q 1/68* (2006.01)
B01L 3/00 (2006.01)

(21) International Application Number:
PCT/US2012/058096

(22) International Filing Date:
28 September 2012 (28.09.2012)

(25) Filing Language: English

(26) Publication Language: English

(30) Priority Data:
61/541,371 30 September 2011 (30.09.2011) US
61/564,027 28 November 2011 (28.11.2011) US

(71) Applicant: **LIFE TECHNOLOGIES CORPORATION** [US/US]; 5791 Van Allen Way, Carlsbad, California 92008 (US).

(72) Inventors: **FREUDENTHAL, Jacob K.**; Life Technologies Corporation, 5791 Van Allen Way, Carlsbad, California 92008 (US). **DAHLHOFF, Geoffrey**; Life Technologies Corporation, 5791 Van Allen Way, Carlsbad, California 92008 (US). **MAHER, Kevin**; Life Technoloiges Corporation, 5791 Van Allen Way, Carlsbad, California 92008 (US). **CHEN, Mingsong**; Life Technoloiges Corporation, 5791 Van Allen Way, Carlsbad, California 92008 (US). **LIM, Gary**; Life Technoloiges Corporation, 5791 Van Allen Way, Carlsbad, California 92008 (US). **DANEHY, Ronald**; Life Technoloiges Corporation, 5791 Van Allen Way, Carlsbad, California 92008 (US). **FORTESCUE, David**; Life Technoloiges Corporation, 5791 Van Allen Way, Carlsbad, California 92008 (US). **SHEN, Ming**; Life Technoloiges Corporation, 5791 Van Allen Way, Carlsbad, California 92008 (US). **SOH, Woon Liang Terence**; Life Technologies Corporation, 5791 Van Allen Way, Carlsbad, California 92008 (US). **CHENG, Francis**; Life Technologies Corporation, 5791 Van Allen Way, Carlsbad, California 92008 (US). **WU, Ruoyun**; Life Technologies Corporation, 5791 Van Allen Way, Carlsbad, California 92008 (US). **LEE, Thiam Chye**; Life Technologies Corporation, 5791 Van Allen Way, Carlsbad, California 92008 (US).

[Continued on next page]

(54) Title: SYSTEMS AND METHODS FOR BIOLOGICAL ANALYSIS

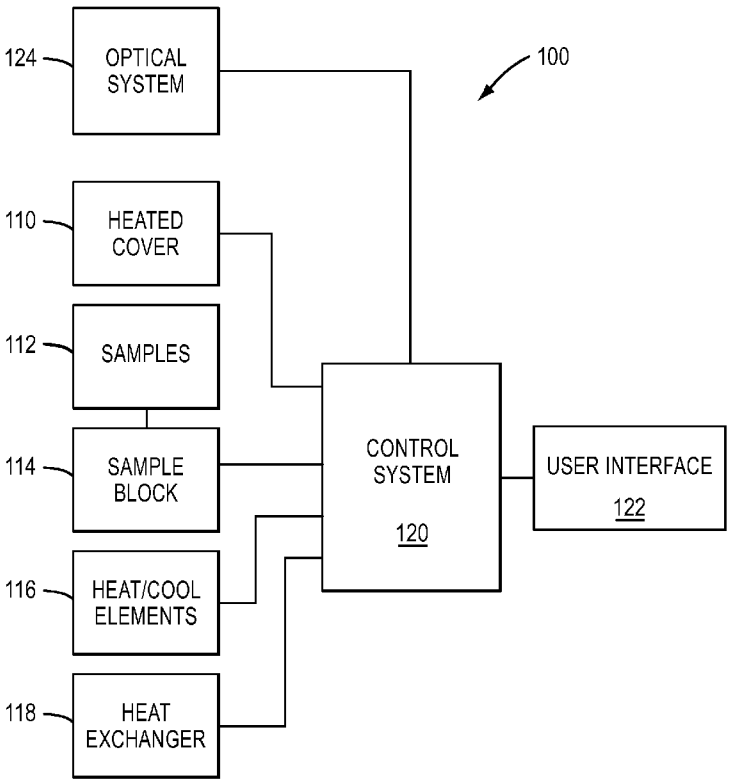

(57) Abstract: A biological analysis system is provided. The system comprises an interchangeable assembly configured to accommodate any one of a plurality of sample holders, each respective sample holder configured to receive a plurality of samples. The system also includes a control system configured to cycle the plurality of samples through a series of temperatures. The system further includes an optical system configured to detect fluorescent signals emitted from the plurality of samples. The optical system, in particular, can comprise a single field lens, an excitation source, an optical sensor, and a plurality of filter components. The excitation source can be one or more light emitting diodes. The field lens can be a bi-convex lens.

WO 2013/049702 A9

CHAPPELL, Gary; Life Technologies Corporation, 5791 Van Allen Way, Carlsbad, California 92008 (US). **LIM, Chee Kiong**; Life Technologies Corporation, 5791 Van Allen Way, Carlsbad, California 92008 (US). **DERE, Jeff**; Life Technologies Corporation, 5791 Van Allen Way, Carlsbad, California 92008 (US). **STRAUB, Ted**; Life Technologies Corporation, 5791 Van Allen Way, Carlsbad, California 92008 (US). **FONSECA, Jorge**; Life Technologies Corporation, 5791 Van Allen Way, Carlsbad, California 92008 (US). **BOO, Kuan Moon**; Life Technologies Corporation, 5791 Van Allen Way, Carlsbad, California 92008 (US). **LAU, Soo Yong**; Block 103, Aljunied Crescent, #11-283, Singapore 380103 (SG).

(74) **Agent**: **NOVAK, Jason**; Life Technologies Corporation, 5791 Van Allen Way, Carlsbad, California 92008 (US).

(81) **Designated States** *(unless otherwise indicated, for every kind of national protection available)*: AE, AG, AL, AM, AO, AT, AU, AZ, BA, BB, BG, BH, BN, BR, BW, BY, BZ, CA, CH, CL, CN, CO, CR, CU, CZ, DE, DK, DM, DO, DZ, EC, EE, EG, ES, FI, GB, GD, GE, GH, GM, GT, HN, HR, HU, ID, IL, IN, IS, JP, KE, KG, KM, KN, KP, KR, KZ, LA, LC, LK, LR, LS, LT, LU, LY, MA, MD, ME, MG, MK, MN, MW, MX, MY, MZ, NA, NG, NI, NO, NZ, OM, PA, PE, PG, PH, PL, PT, QA, RO, RS, RU, RW, SC, SD, SE, SG, SK, SL, SM, ST, SV, SY, TH, TJ, TM, TN, TR, TT, TZ, UA, UG, US, UZ, VC, VN, ZA, ZM, ZW.

(84) **Designated States** *(unless otherwise indicated, for every kind of regional protection available)*: ARIPO (BW, GH, GM, KE, LR, LS, MW, MZ, NA, RW, SD, SL, SZ, TZ, UG, ZM, ZW), Eurasian (AM, AZ, BY, KG, KZ, RU, TJ, TM), European (AL, AT, BE, BG, CH, CY, CZ, DE, DK, EE, ES, FI, FR, GB, GR, HR, HU, IE, IS, IT, LT, LU, LV, MC, MK, MT, NL, NO, PL, PT, RO, RS, SE, SI, SK, SM, TR), OAPI (BF, BJ, CF, CG, CI, CM, GA, GN, GQ, GW, ML, MR, NE, SN, TD, TG).

Published:

— *with international search report (Art. 21(3))*

(88) **Date of publication of the international search report**:
10 October 2013

(48) **Date of publication of this corrected version**:
1 May 2014

(15) **Information about Correction**:
see Notice of 1 May 2014