(12) INTERNATIONAL APPLICATION PUBLISHED UNDER THE PATENT COOPERATION TREATY (PCT)

(19) World Intellectual Property Organization
International Bureau

(43) International Publication Date
26 July 2007 (26.07.2007)

PCT

(10) International Publication Number
WO 2007/084052 A1

(51) International Patent Classification:
B66C 1/66 (2006.01) *B66C 1/10* (2006.01)

(21) International Application Number:
PCT/SE2007/000026

(22) International Filing Date: 15 January 2007 (15.01.2007)

(25) Filing Language: Swedish

(26) Publication Language: English

(30) Priority Data:
0600092-1 18 January 2006 (18.01.2006) SE

(71) Applicant *(for all designated States except US)*: **BROMMA CONQUIP AB** [SE/SE]; Krossgatan 31-33, S-162 50 Vällingby (SE).

(72) Inventor; and

(75) Inventor/Applicant *(for US only)*: **HELLGREN, Anders** [SE/SE]; Gårdsvägen 19, S-175 50 Järfälla (SE).

(74) Agent: **DR. LUDWIG BRANN PATENTBYRÅ AB**; P.O. Box 17192, S-104 62 Stockholm (SE).

(81) Designated States *(unless otherwise indicated, for every kind of national protection available)*: AE, AG, AL, AM, AT, AU, AZ, BA, BB, BG, BR, BW, BY, BZ, CA, CH, CN, CO, CR, CU, CZ, DE, DK, DM, DZ, EC, EE, EG, ES, FI, GB, GD, GE, GH, GM, GT, HN, HR, HU, ID, IL, IN, IS, JP, KE, KG, KM, KN, KP, KR, KZ, LA, LC, LK, LR, LS, LT, LU, LV, LY, MA, MD, MG, MK, MN, MW, MX, MY, MZ, NA, NG, NI, NO, NZ, OM, PG, PH, PL, PT, RO, RS, RU, SC, SD, SE, SG, SK, SL, SM, SV, SY, TJ, TM, TN, TR, TT, TZ, UA, UG, US, UZ, VC, VN, ZA, ZM, ZW.

(84) Designated States *(unless otherwise indicated, for every kind of regional protection available)*: ARIPO (BW, GH, GM, KE, LS, MW, MZ, NA, SD, SL, SZ, TZ, UG, ZM, ZW), Eurasian (AM, AZ, BY, KG, KZ, MD, RU, TJ, TM), European (AT, BE, BG, CH, CY, CZ, DE, DK, EE, ES, FI, FR, GB, GR, HU, IE, IS, IT, LT, LU, LV, MC, NL, PL, PT, RO, SE, SI, SK, TR), OAPI (BF, BJ, CF, CG, CI, CM, GA, GN, GQ, GW, ML, MR, NE, SN, TD, TG).

Published:
— *with international search report*

[Continued on next page]

(54) **Title:** FLIPPER ARM DRIVE

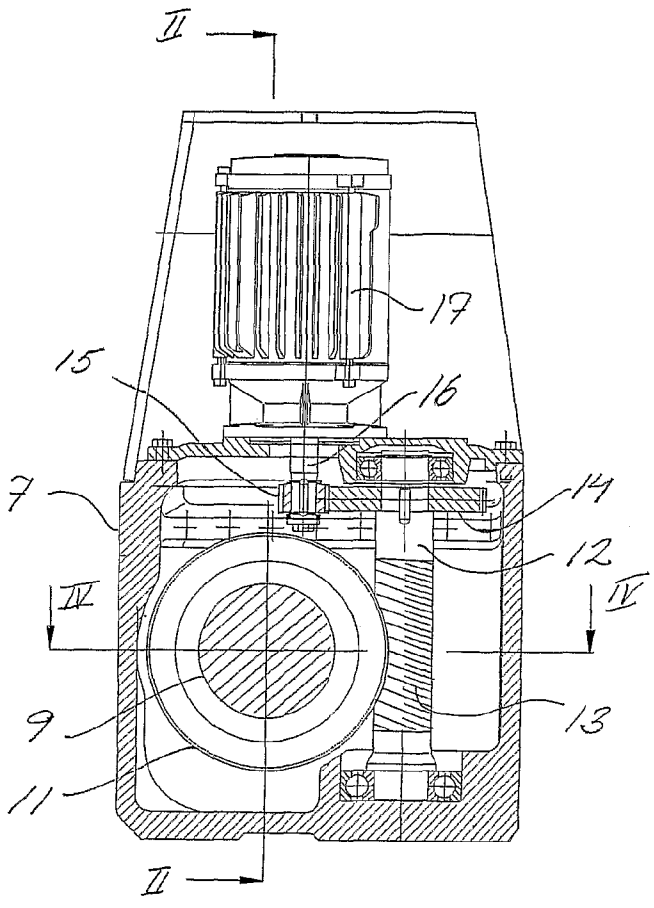

(57) **Abstract:** The present invention relates to an arrangement on a spreader for lifting containers, the arrangement comprising a flipper arm (5) which is supported at the corner of the spreader such that the flipper arm is pivotable between an upraised rest position and a lowered operative position wherein the flipper arm is effective for positioning of the spreader corner relative to the corresponding corner of a container upon connecting the spreader to the container. The arrangement is characterized in that the flipper arm is carried on a rotatable shaft (9) and driven by a motor (17), and wherein a power transmission is inserted between the motor and the flipper arm, the power transmission being effective for the transfer of torque from the motor to the flipper arm upon energizing the motor, and operative for locking the flipper arm in its pivoted position upon non-energizing the motor.

WO 2007/084052 A1

For two-letter codes and other abbreviations, refer to the "Guidance Notes on Codes and Abbreviations" appearing at the beginning of each regular issue of the PCT Gazette.