(12) INTERNATIONAL APPLICATION PUBLISHED UNDER THE PATENT COOPERATION TREATY (PCT)

(19) World Intellectual Property Organization
International Bureau

(43) International Publication Date
8 February 2007 (08.02.2007)

PCT

(10) International Publication Number
WO 2007/016225 A3

(51) International Patent Classification:
B65D 83/00 (2006.01)

(21) International Application Number:
PCT/US2006/029154

(22) International Filing Date: 28 July 2006 (28.07.2006)

(25) Filing Language: English

(26) Publication Language: English

(30) Priority Data:
11/191,857 28 July 2005 (28.07.2005) US

(71) Applicant *(for all designated States except US)*: **PRECISION VALVE CORPORATION** [US/US]; 700 Nepperhan Avenue, Yonkers, NY 10703 (US).

(72) Inventor: **O'TOOLE, Timothy**; 29 Forest Court, Yorktown Heights, NY 10598 (US).

(74) Agent: **STEIDL, Daniel, H.**; KILGANNON & STEIDL, 85 Pondfield Road, Bronxville, NY 10708 (US).

(81) Designated States *(unless otherwise indicated, for every kind of national protection available)*: AE, AG, AL, AM, AT, AU, AZ, BA, BB, BG, BR, BW, BY, BZ, CA, CH, CN, CO, CR, CU, CZ, DE, DK, DM, DZ, EC, EE, EG, ES, FI, GB, GD, GE, GH, GM, HN, HR, HU, ID, IL, IN, IS, JP, KE, KG, KM, KN, KP, KR, KZ, LA, LC, LK, LR, LS, LT, LU, LV, LY, MA, MD, MG, MK, MN, MW, MX, MZ, NA, NG, NI, NO, NZ, OM, PG, PH, PL, PT, RO, RS, RU, SC, SD, SE, SG, SK, SL, SM, SY, TJ, TM, TN, TR, TT, TZ, UA, UG, US, UZ, VC, VN, ZA, ZM, ZW.

(84) Designated States *(unless otherwise indicated, for every kind of regional protection available)*: ARIPO (BW, GH, GM, KE, LS, MW, MZ, NA, SD, SL, SZ, TZ, UG, ZM, ZW), Eurasian (AM, AZ, BY, KG, KZ, MD, RU, TJ, TM), European (AT, BE, BG, CH, CY, CZ, DE, DK, EE, ES, FI, FR, GB, GR, HU, IE, IS, IT, LT, LU, LV, MC, NL, PL, PT, RO, SE, SI, SK, TR), OAPI (BF, BJ, CF, CG, CI, CM, GA, GN, GQ, GW, ML, MR, NE, SN, TD, TG).

Declaration under Rule 4.17:
— *as to the applicant's entitlement to claim the priority of the earlier application (Rule 4.17(iii))*

Published:
— *with international search report*
— *before the expiration of the time limit for amending the claims and to be republished in the event of receipt of amendments*

(88) Date of publication of the international search report:
4 October 2007

[Continued on next page]

(54) Title: AEROSOL VALVE TRIGGER ACTUATOR

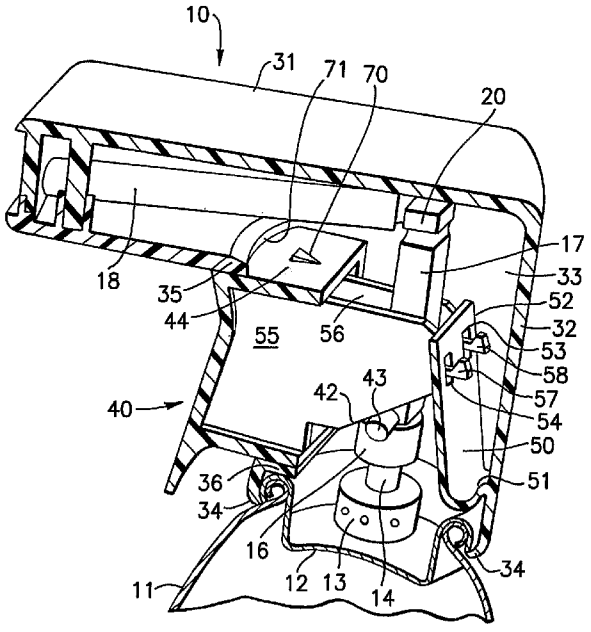

(57) Abstract: Aerosol valve trigger actuator with a plastic shroud, a linearly acting trigger member having at least one camming surface, a fluid conduit for connection to a vertical aerosol valve stem and with at least one cam follower, the trigger actuation camming the plastic conduit and valve stem downwardly to dispense product, an elongated bendable plastic spring molded to the shroud, the trigger member having at least one rearward extension extending through at least one opening in the spring. In a first embodiment, the rearward extension is locked by one or more hooks to the free end of the plastic spring on assembly. In a second embodiment, a protrusion on the trigger locks it against removal. The plastic spring biases the trigger member forwardly on trigger release.

WO 2007/016225 A3

For two-letter codes and other abbreviations, refer to the "Guidance Notes on Codes and Abbreviations" appearing at the beginning of each regular issue of the PCT Gazette.