(12) INTERNATIONAL APPLICATION PUBLISHED UNDER THE PATENT COOPERATION TREATY (PCT)

(19) World Intellectual Property Organization
International Bureau

(43) International Publication Date
8 March 2007 (08.03.2007)

PCT

(10) International Publication Number
WO 2007/027693 A3

(51) International Patent Classification:
*F16F 9/36* (2006.01)

(21) International Application Number:
PCT/US2006/033726

(22) International Filing Date: 29 August 2006 (29.08.2006)

(25) Filing Language: English

(26) Publication Language: English

(30) Priority Data:
11/218,380 2 September 2005 (02.09.2005) US

(63) Related by continuation (CON) or continuation-in-part (CIP) to earlier application:
US 11/218,380 (CON)
Filed on 2 September 2005 (02.09.2005)

(71) Applicant *(for all designated States except US)*: **TENNECO AUTOMOTIVE OPERATING COMPANY INC.** [US/US]; 500 North Field Drive, Lake Forest, IL 60045 (US).

(72) Inventors; and

(75) Inventors/Applicants *(for US only)*: **KEIL, Daniel T.** [US/US]; 1845 W. Sterns, Temperance, MI 48182 (US). **ROESSLE, Matthew** [US/US]; 6855 Indigo Creek Ct., Temperance, MI 48182 (US). **MILLER, Lonnie** [US/US]; 865 St. Ann Lane, Monroe, MI 48162 (US).

(74) Agents: **MILLER, Keith H.** et al.; HARNESS, DICKEY & PIERCE, P.L.C., P.O. Box 828, Bloomfield Hills, MI 48303 (US).

(81) Designated States *(unless otherwise indicated, for every kind of national protection available)*: AE, AG, AL, AM, AT, AU, AZ, BA, BB, BG, BR, BW, BY, BZ, CA, CH, CN, CO, CR, CU, CZ, DE, DK, DM, DZ, EC, EE, EG, ES, FI, GB, GD, GE, GH, GM, HN, HR, HU, ID, IL, IN, IS, JP, KE, KG, KM, KN, KP, KR, KZ, LA, LC, LK, LR, LS, LT, LU, LV, LY, MA, MD, MG, MK, MN, MW, MX, MY, MZ, NA, NG, NI, NO, NZ, OM, PG, PH, PL, PT, RO, RS, RU, SC, SD, SE, SG, SK, SL, SM, SV, SY, TJ, TM, TN, TR, TT, TZ, UA, UG, UZ, VC, VN, ZA, ZM, ZW.

(84) Designated States *(unless otherwise indicated, for every kind of regional protection available)*: ARIPO (BW, GH, GM, KE, LS, MW, MZ, NA, SD, SL, SZ, TZ, UG, ZM,

*[Continued on next page]*

(54) Title: ROD GUIDE SEAL

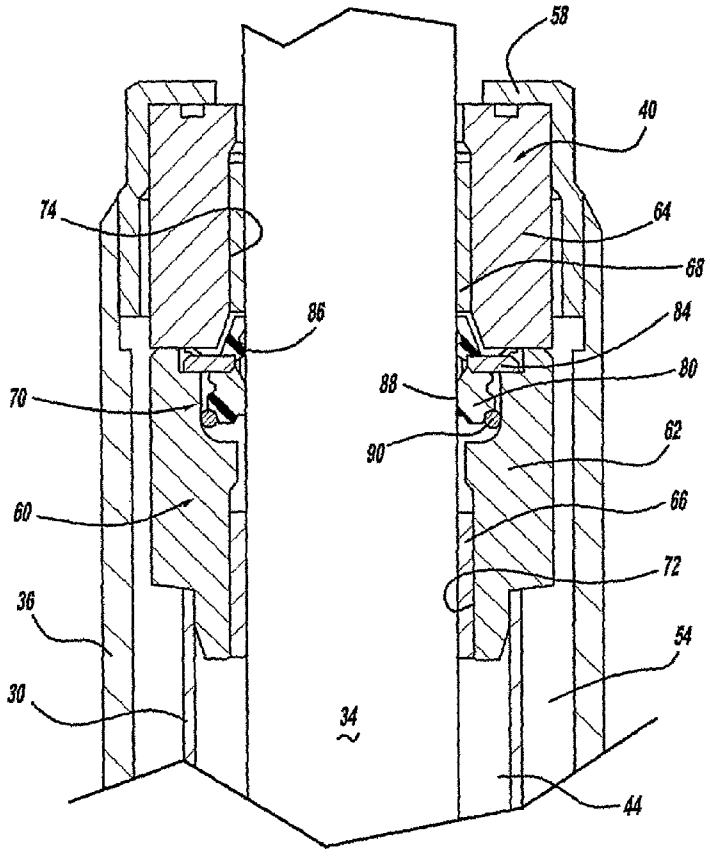


(57) Abstract: A shock absorber includes a rod guide assembly which includes a pair of bearings spaced from each other and a seal assembly located adjacent one of the two bearings. The seal assembly can be located between the two bearings or the seal assembly can be located adjacent one of the two bearings but not between them.

WO 2007/027693 A3

ZW), Eurasian (AM, AZ, BY, KG, KZ, MD, RU, TJ, TM), European (AT, BE, BG, CH, CY, CZ, DE, DK, EE, ES, FI, FR, GB, GR, HU, IE, IS, IT, LT, LU, LV, MC, NL, PL, PT, RO, SE, SI, SK, TR), OAPI (BF, BJ, CF, CG, CI, CM, GA, GN, GQ, GW, ML, MR, NE, SN, TD, TG).

**Declarations under Rule 4.17:**

— *as to applicant's entitlement to apply for and be granted a patent (Rule 4.17(ii))*

— *as to the applicant's entitlement to claim the priority of the earlier application (Rule 4.17(iii))*

**Published:**

— *with international search report*

— *before the expiration of the time limit for amending the claims and to be republished in the event of receipt of amendments*

**(88) Date of publication of the international search report:**
8 November 2007

*For two-letter codes and other abbreviations, refer to the "Guidance Notes on Codes and Abbreviations" appearing at the beginning of each regular issue of the PCT Gazette.*