FIG. 1

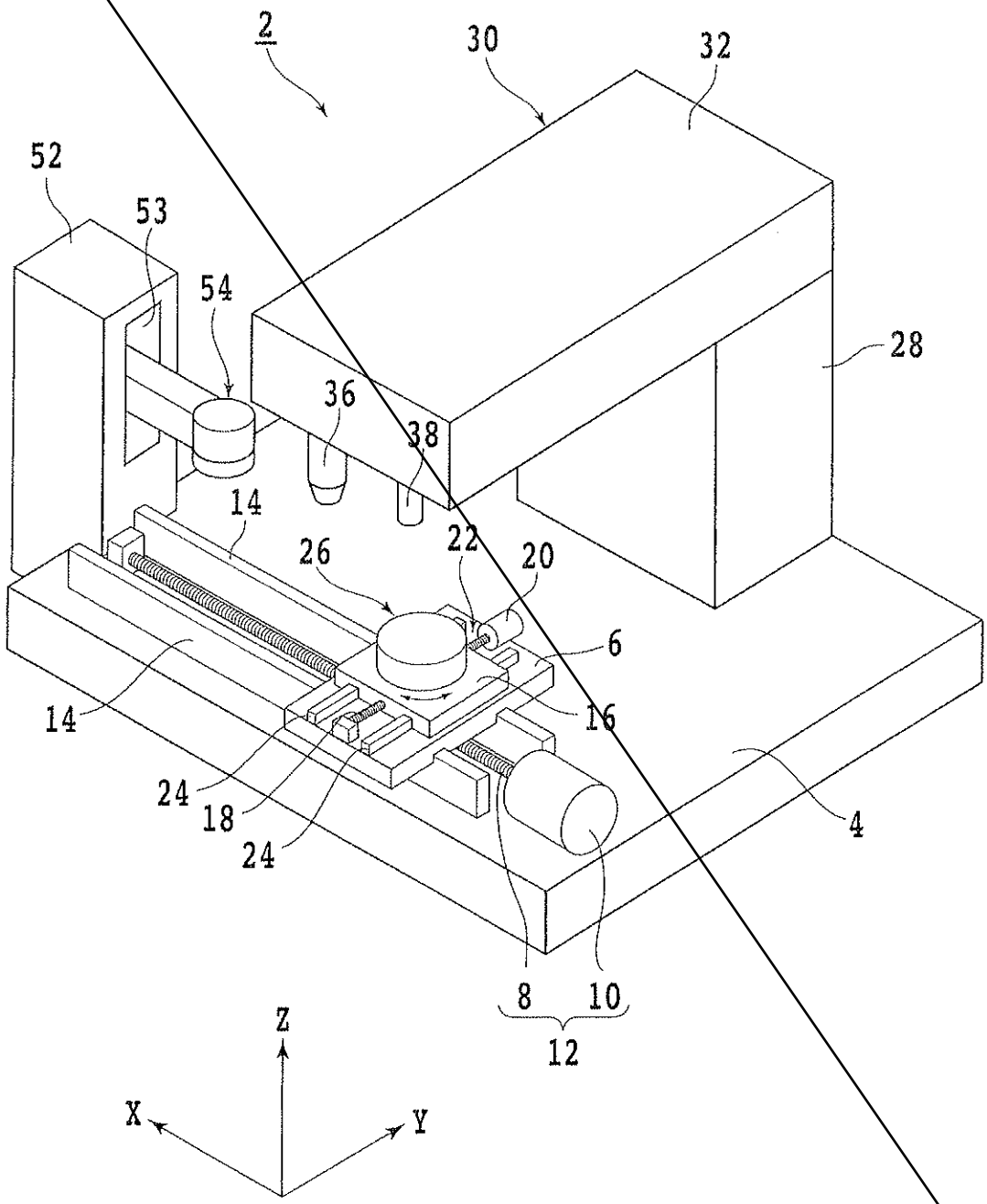

FIG. 2

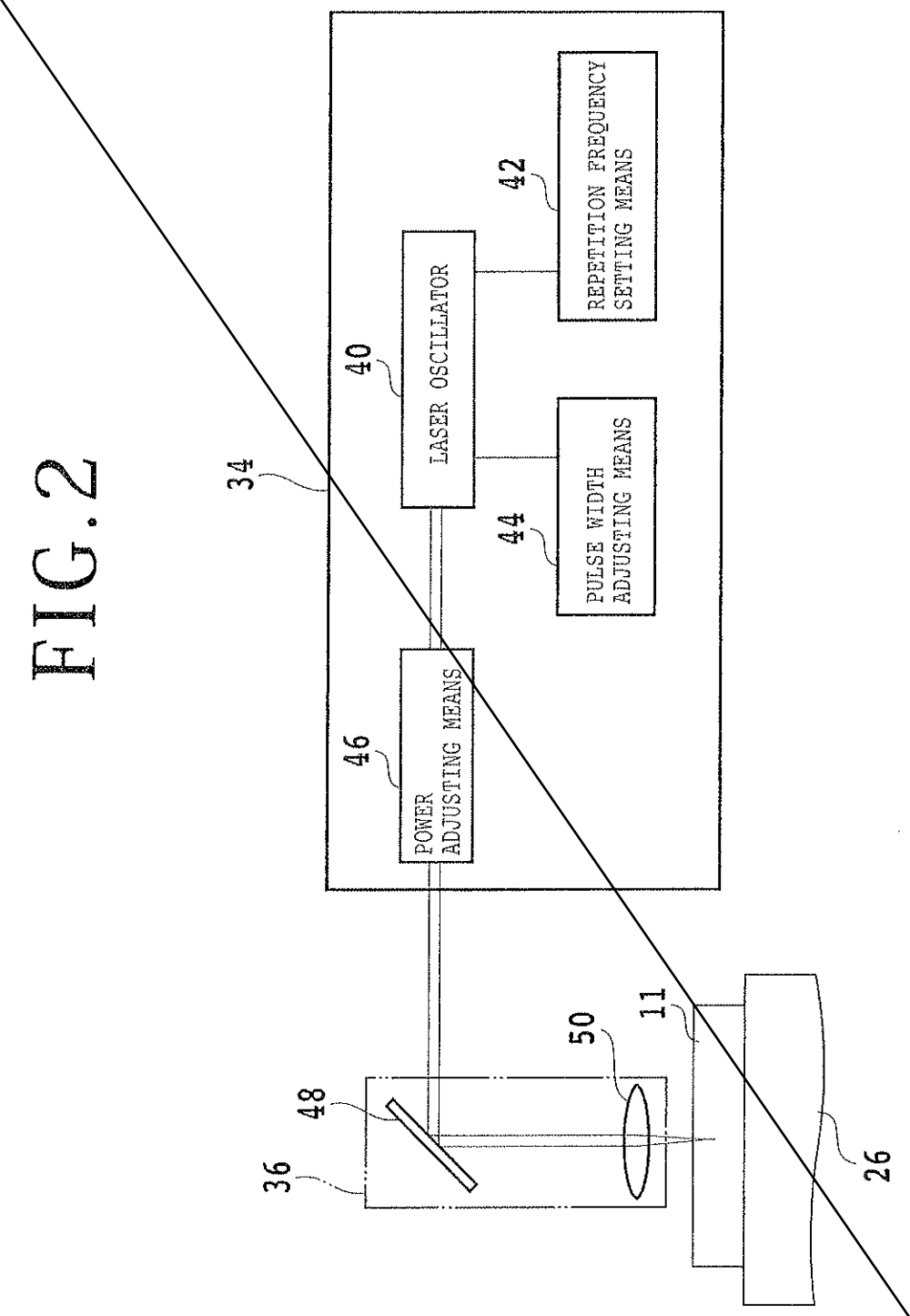
34
40
LASER OSCILLATOR
42
REPETITION FREQUENCY SETTING MEANS
44
PULSE WIDTH ADJUSTING MEANS
46
POWER ADJUSTING MEANS
36
48
50
11
26

FIG.3A

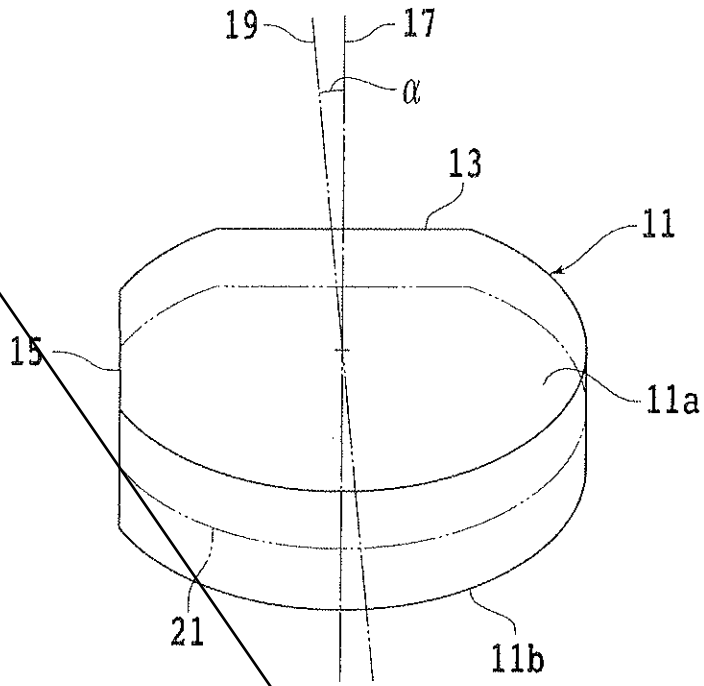

FIG.3B

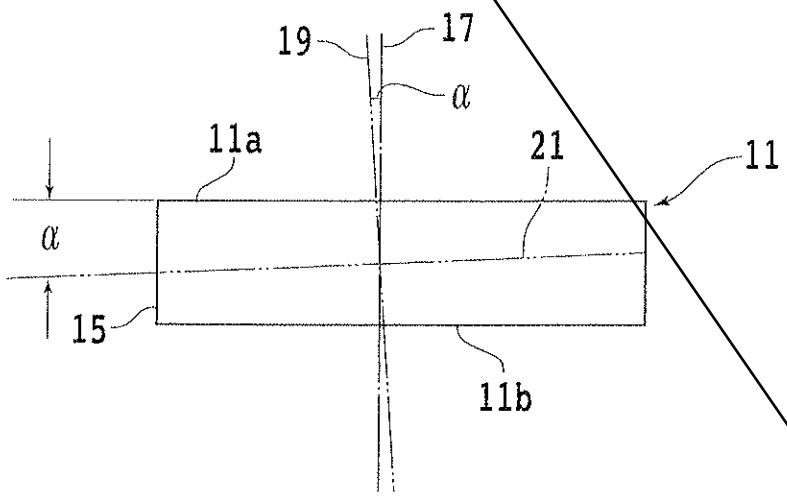

FIG. 4

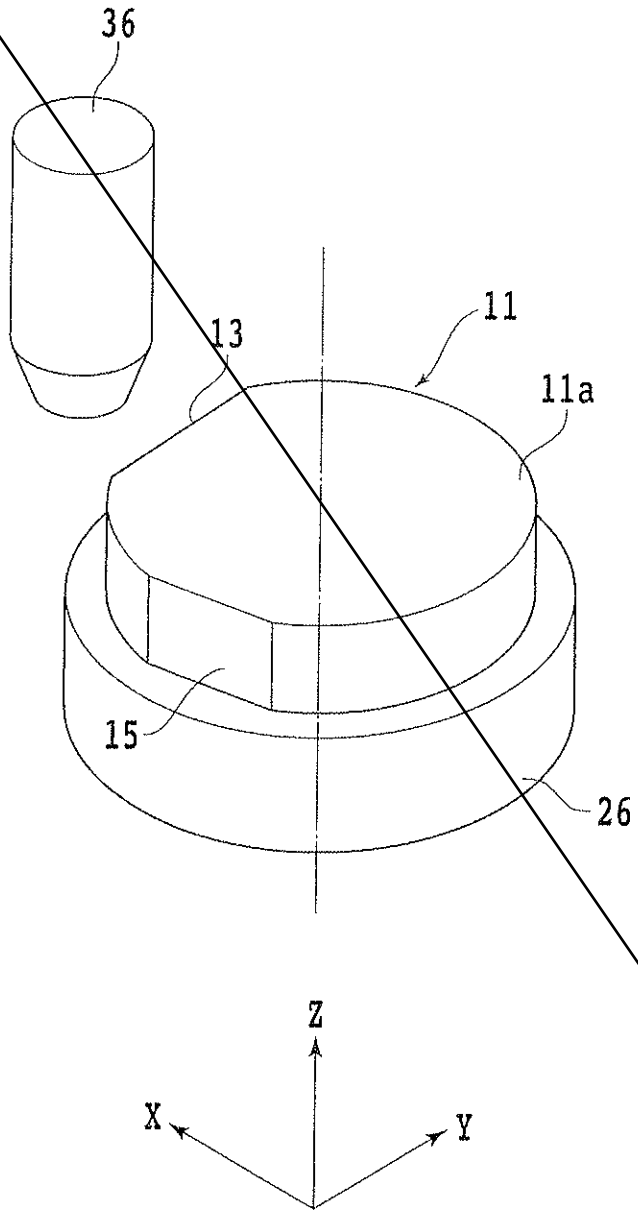

FIG.5

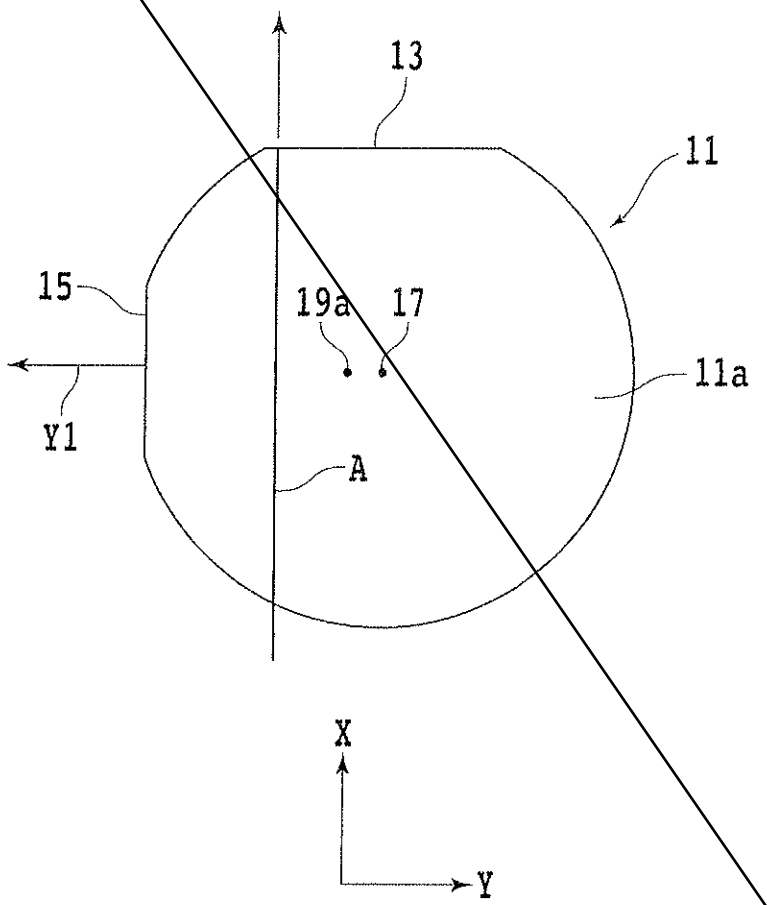

FIG.6

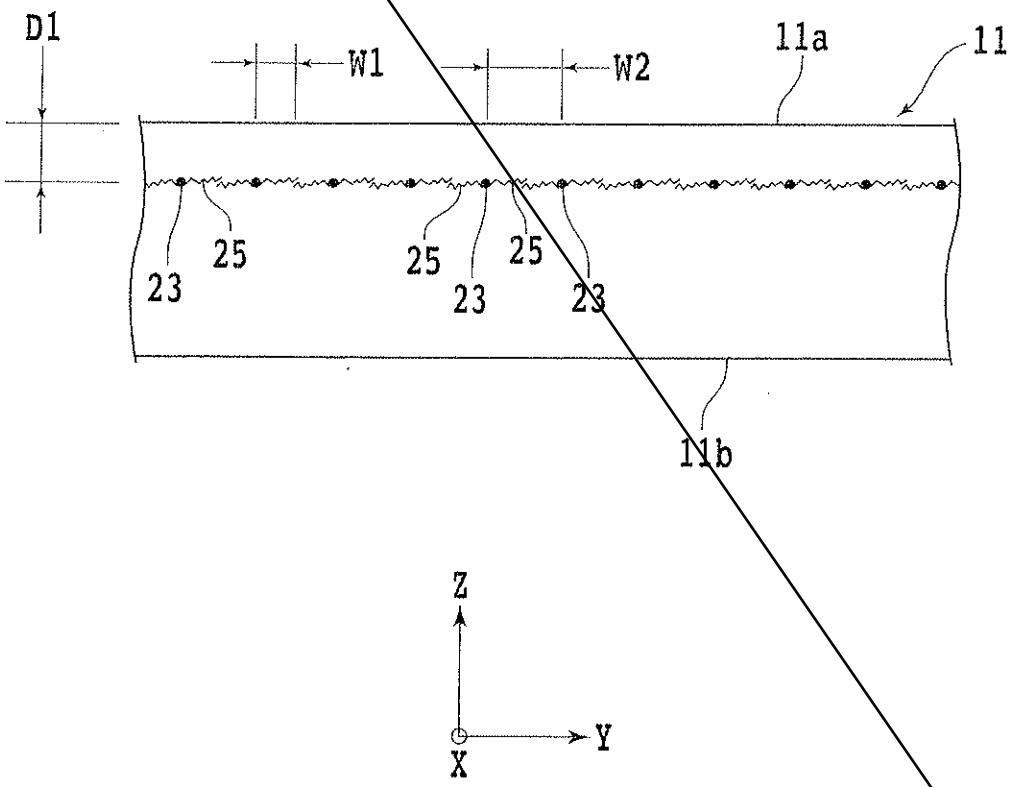

FIG. 7

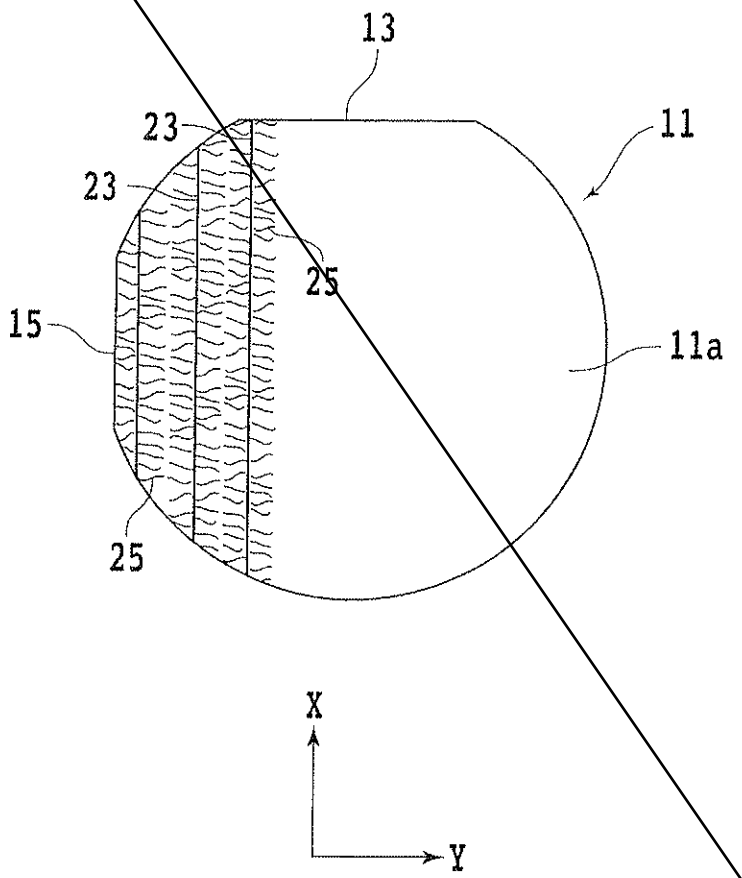

FIG.8A

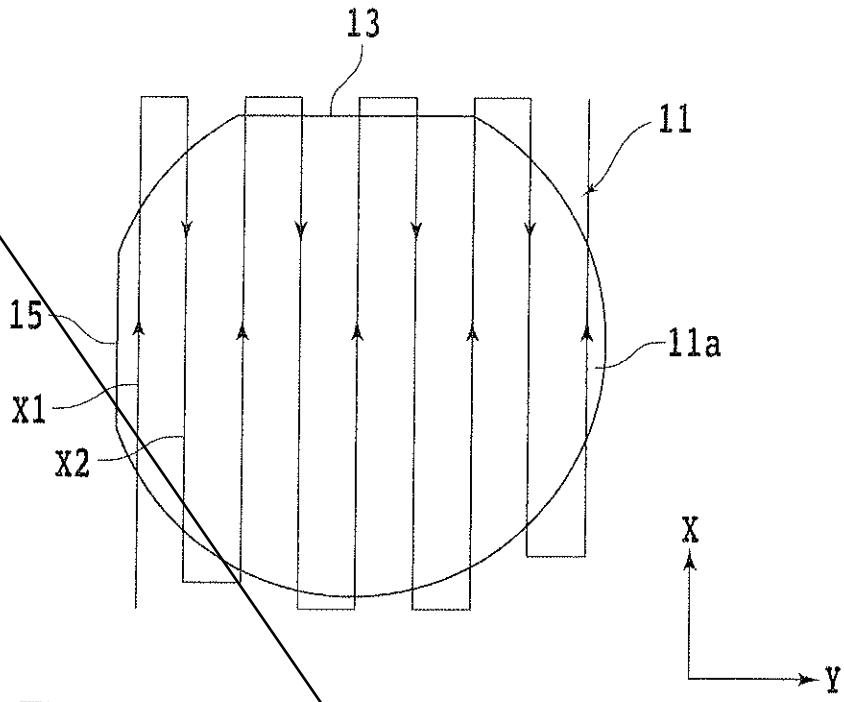

FIG.8B

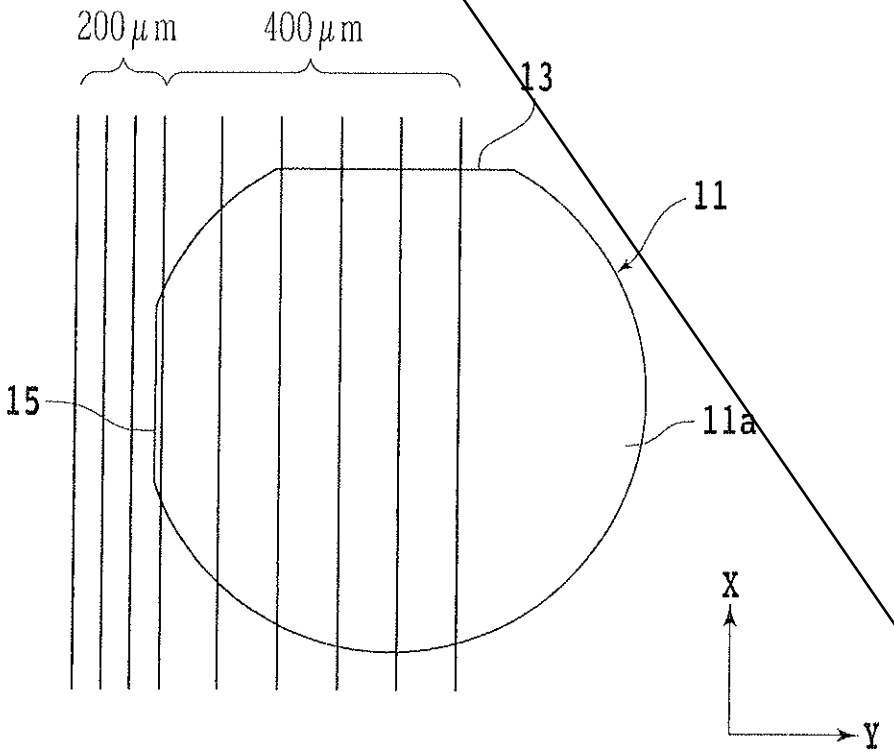

FIG.9A

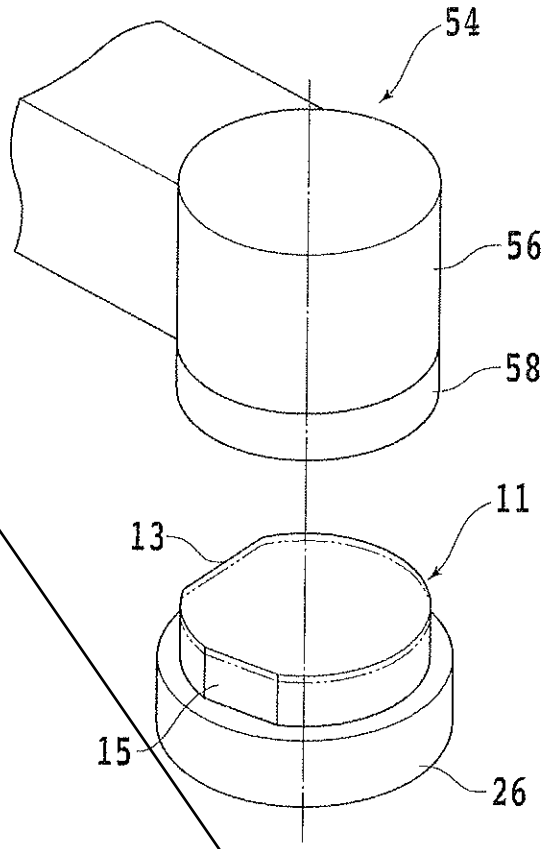

FIG.9B

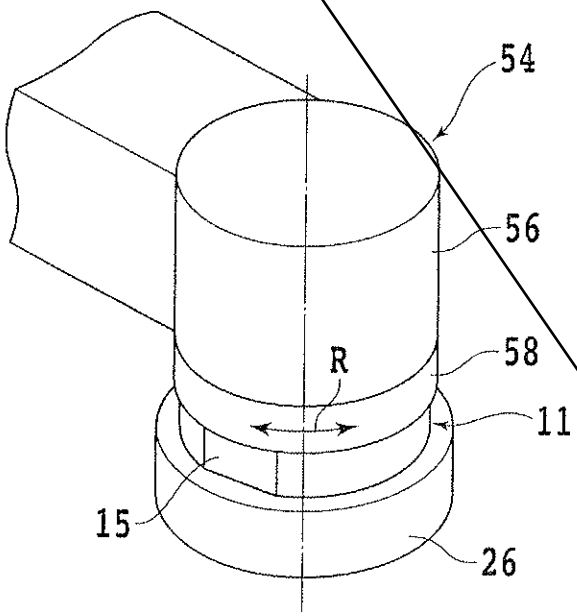

FIG. 10

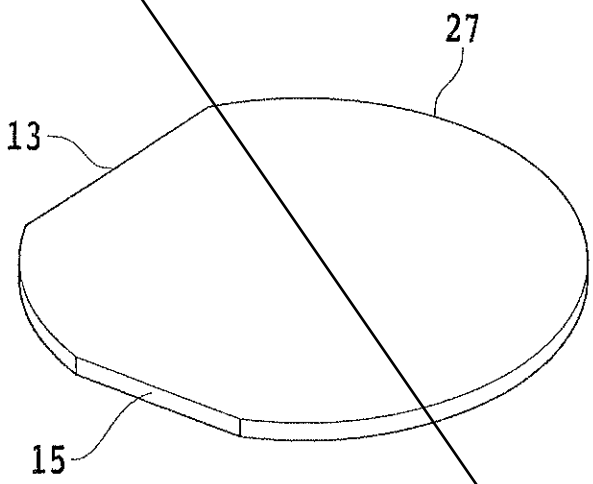

FIG.11A

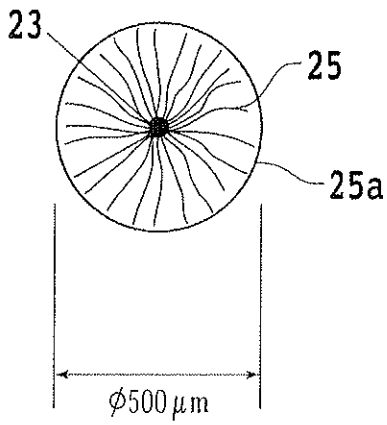

FIG.11B

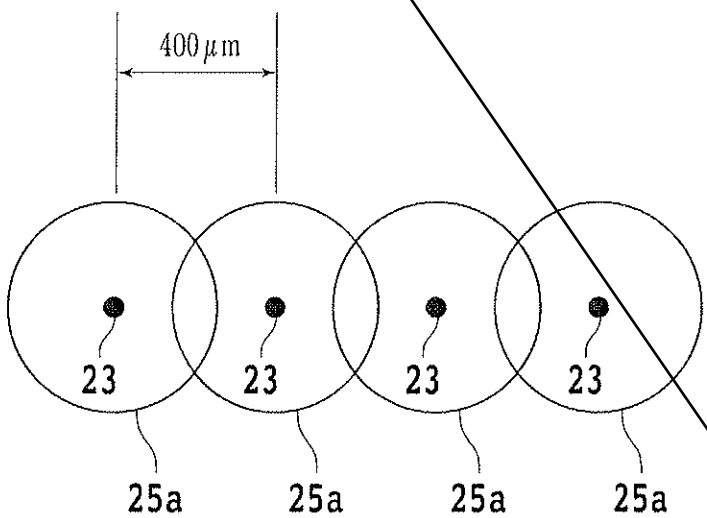

FIG. 1

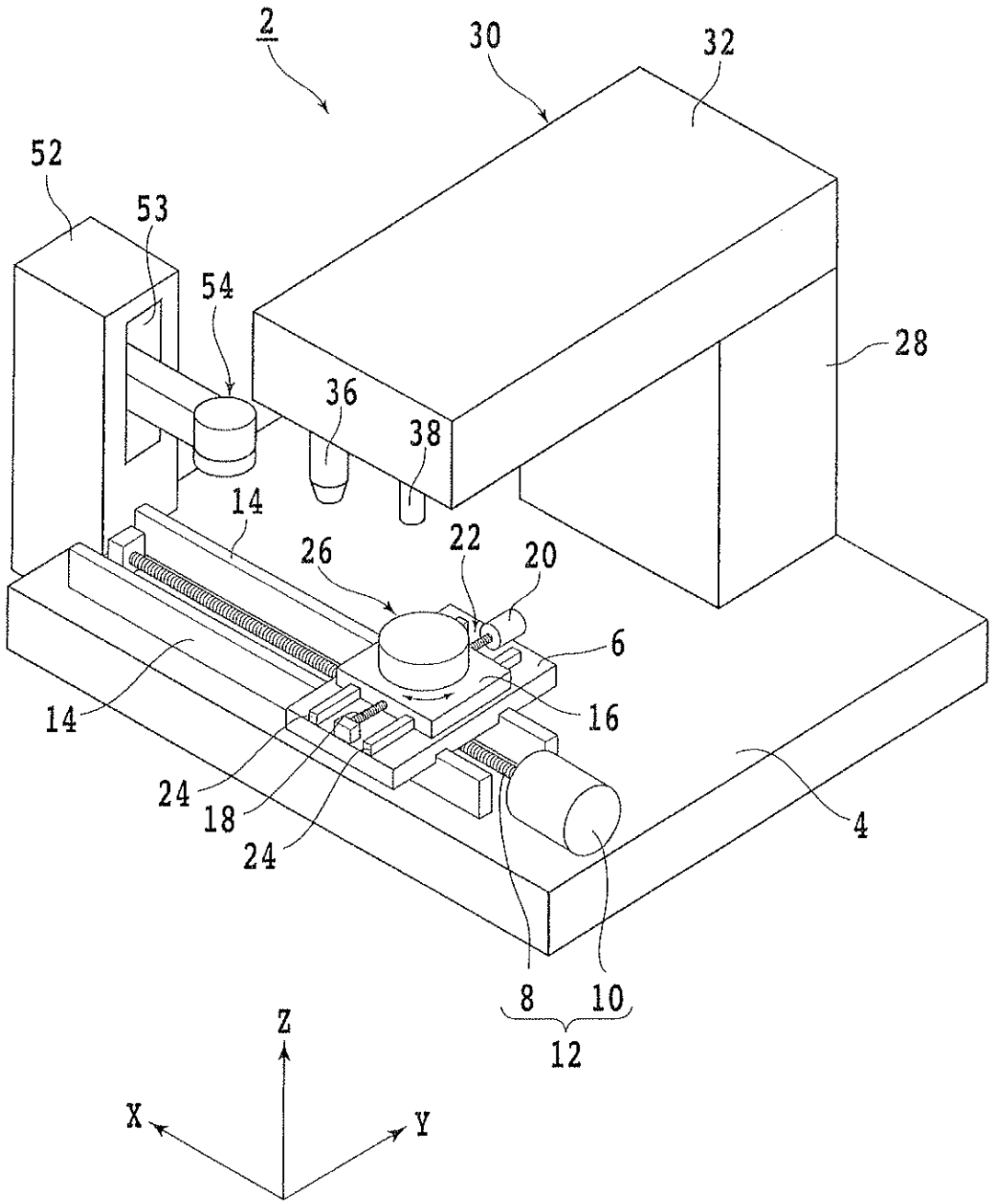

FIG. 2

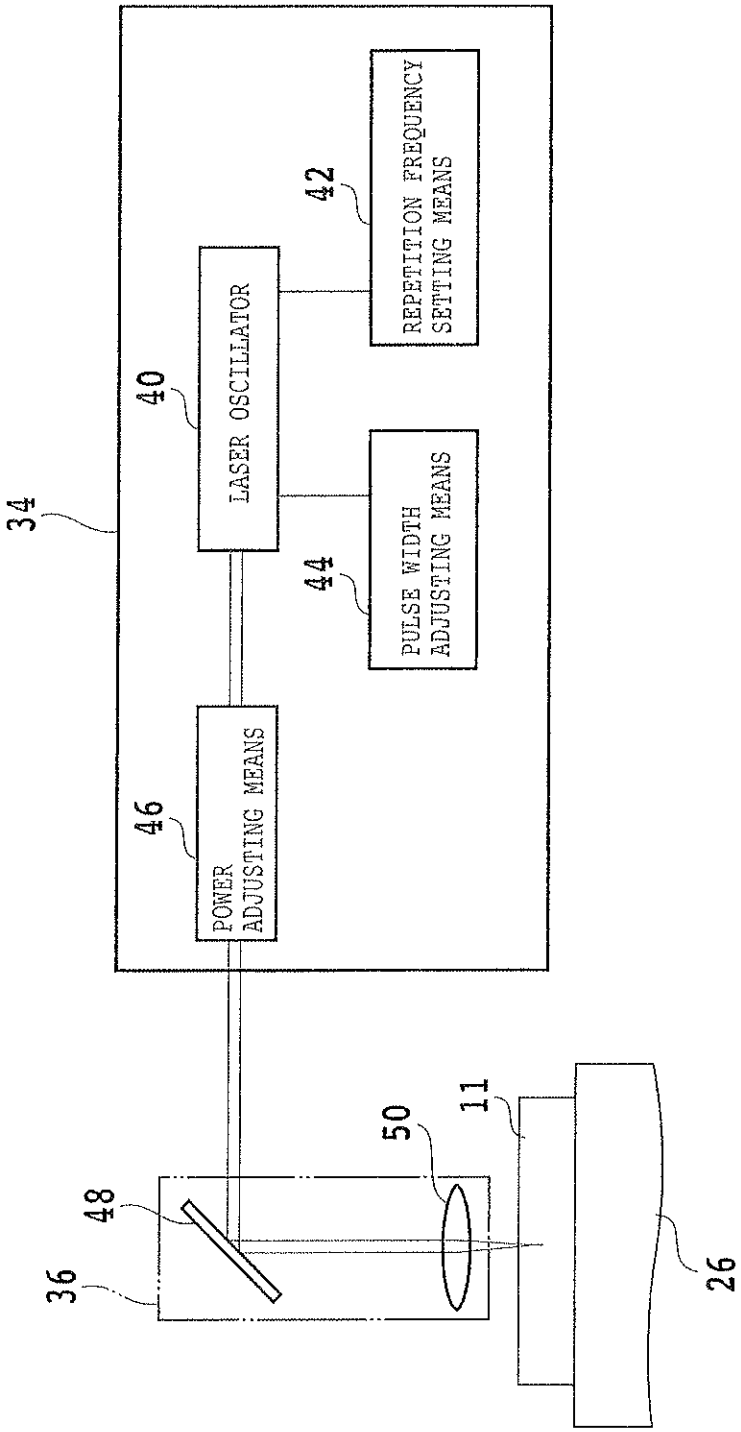
34
40
LASER OSCILLATOR
42
REPETITION FREQUENCY SETTING MEANS
44
PULSE WIDTH ADJUSTING MEANS
46
POWER ADJUSTING MEANS
36
48
50
11
26

FIG.3A

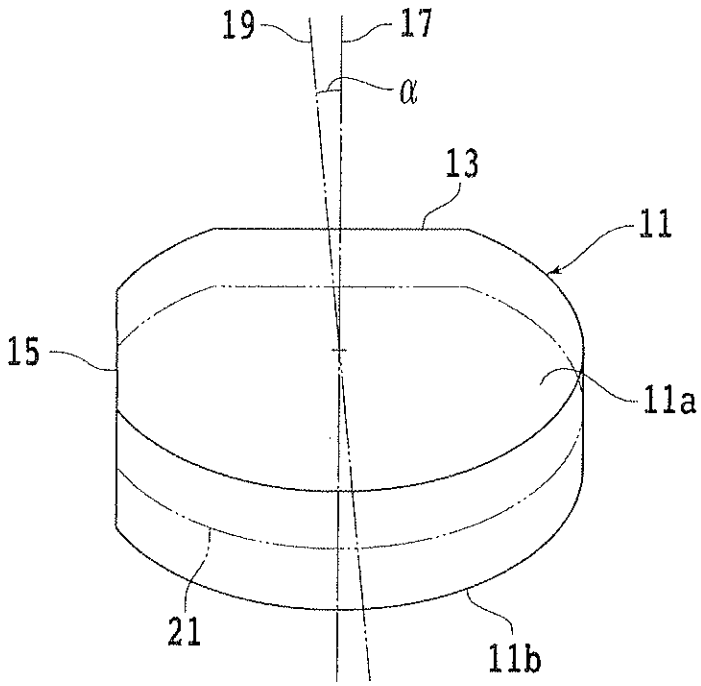

FIG.3B

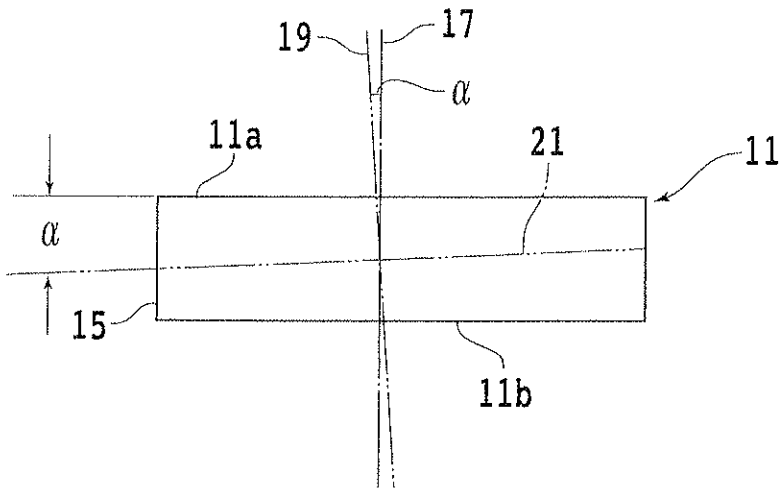

FIG. 4

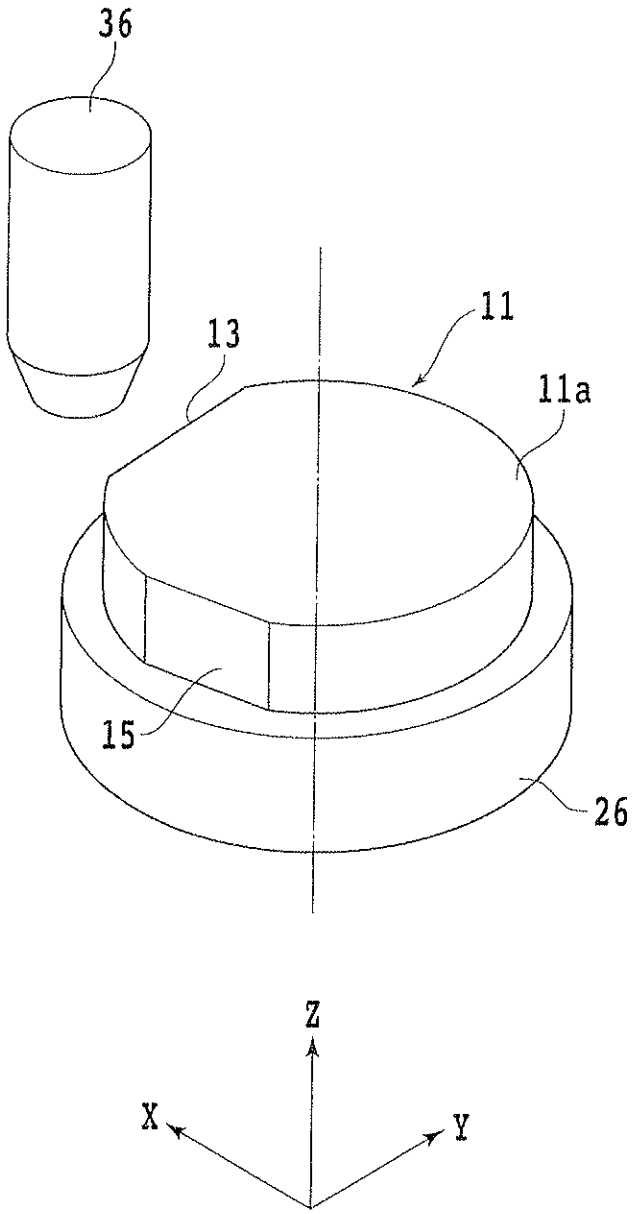

FIG.5

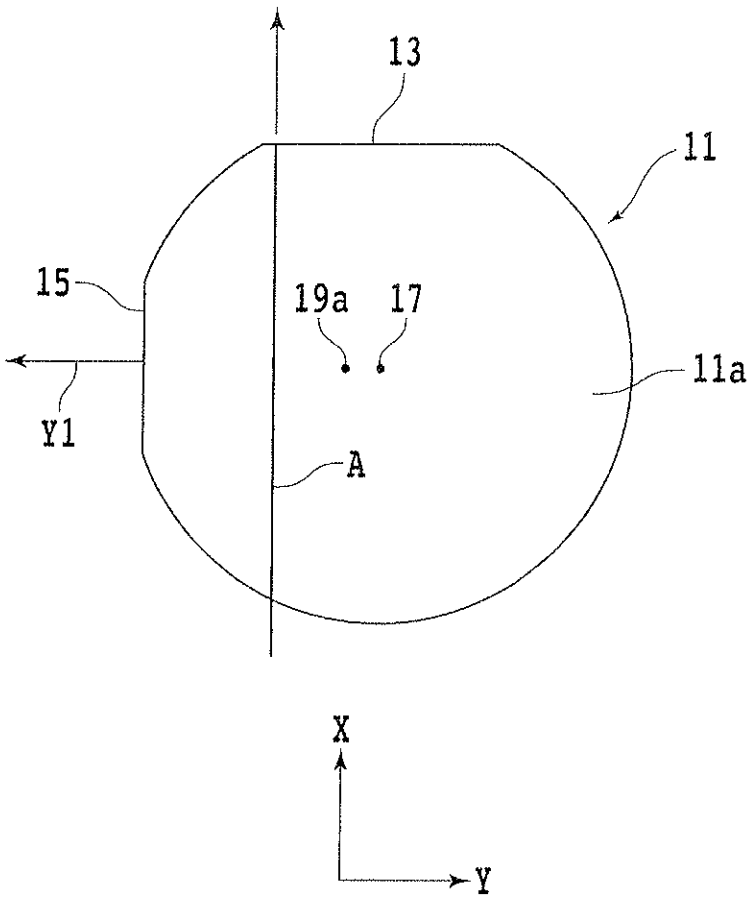

FIG.6

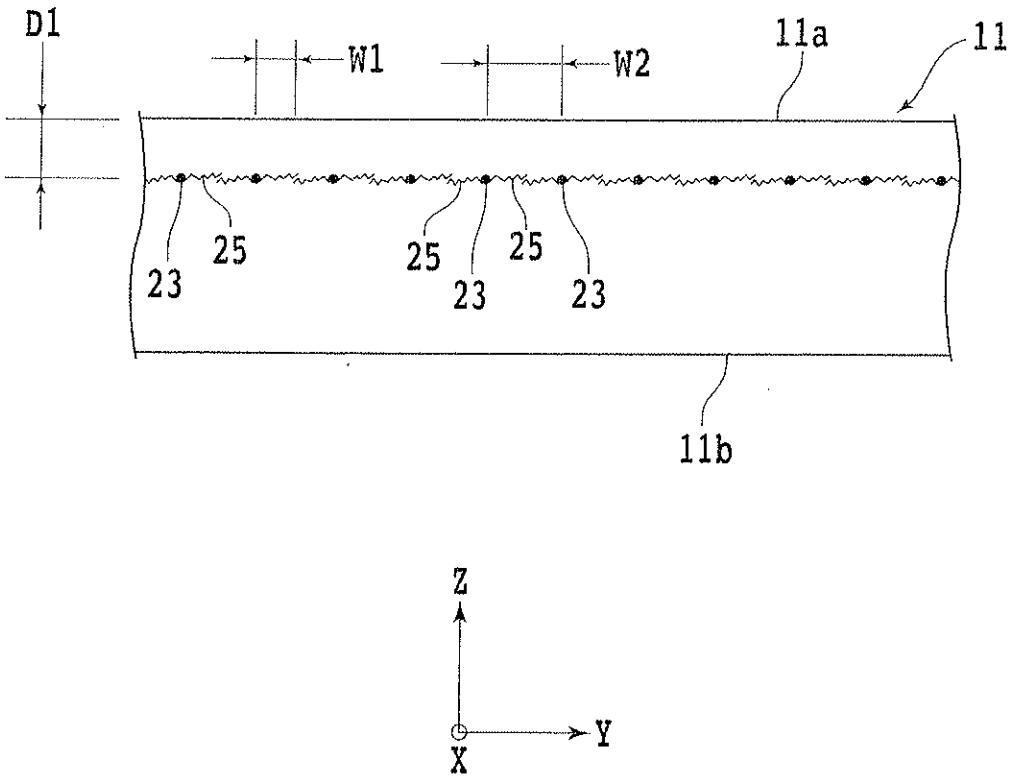

FIG. 7

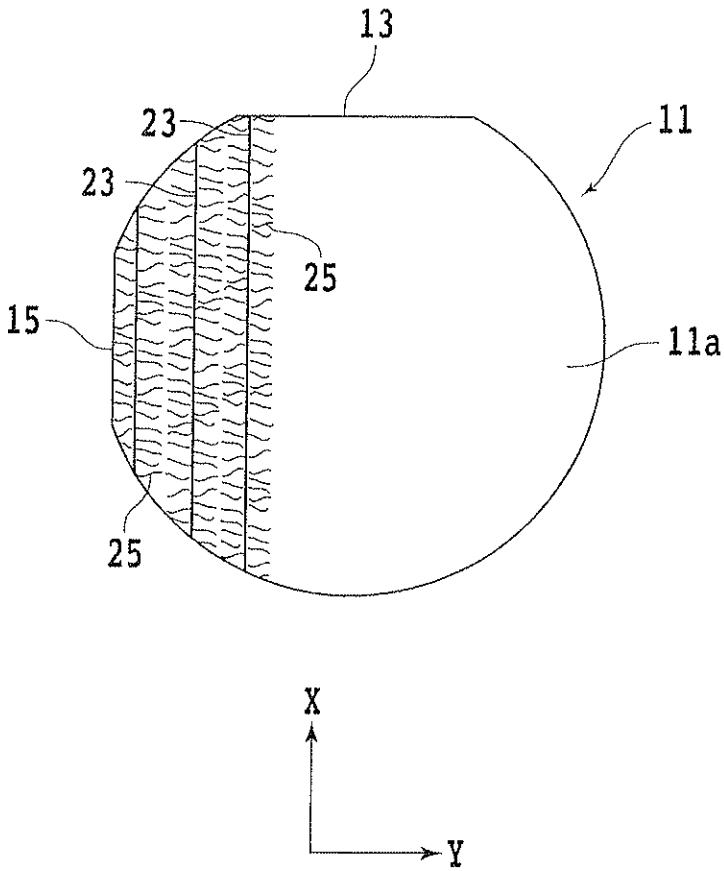

FIG.8A

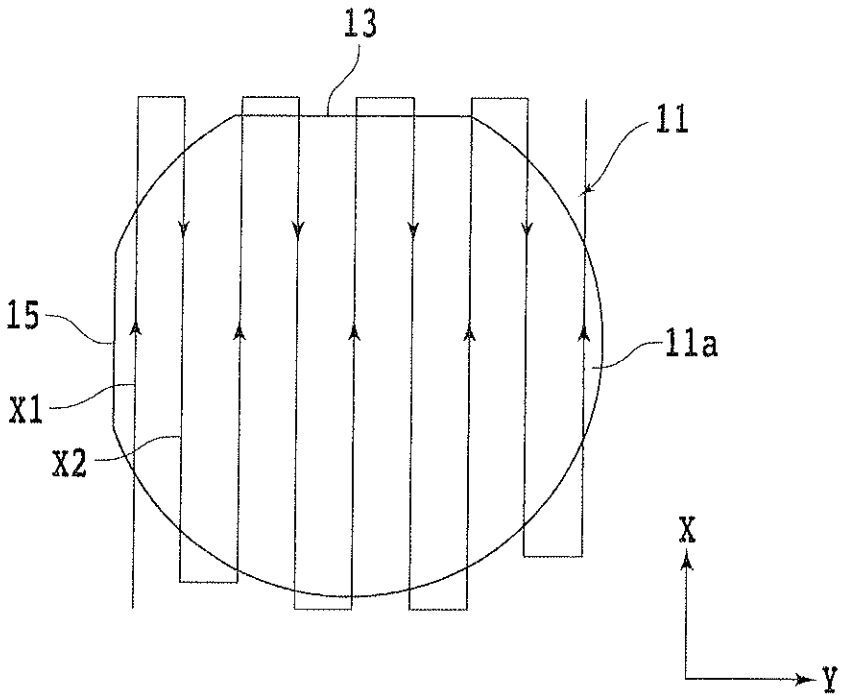

FIG.8B

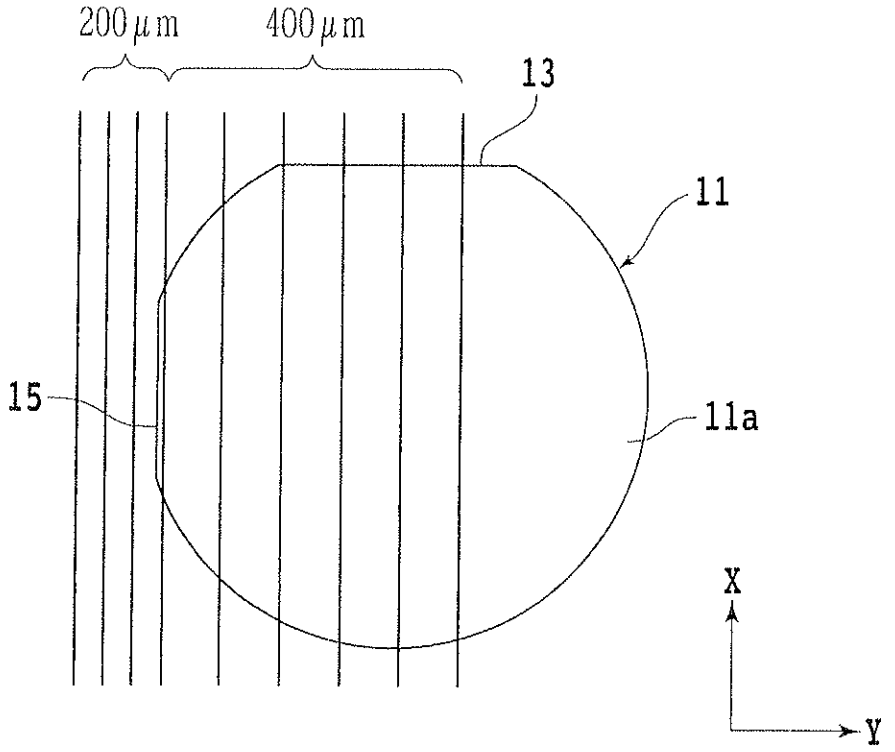

FIG.9A

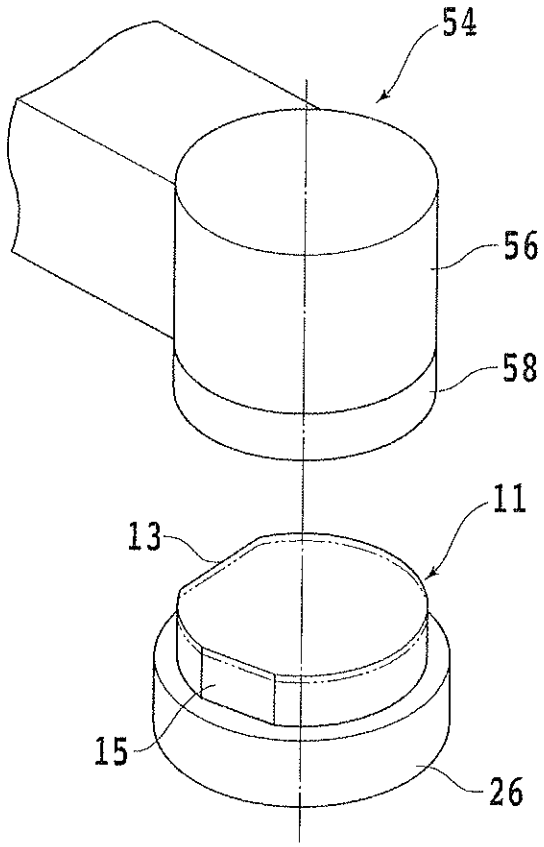

FIG.9B

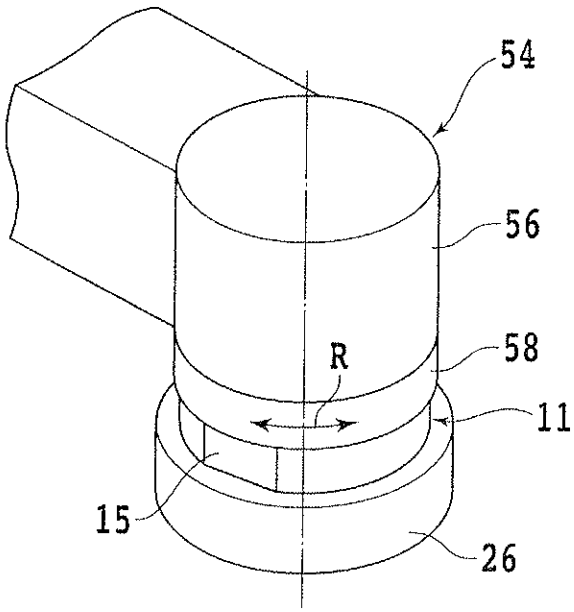

FIG. 10

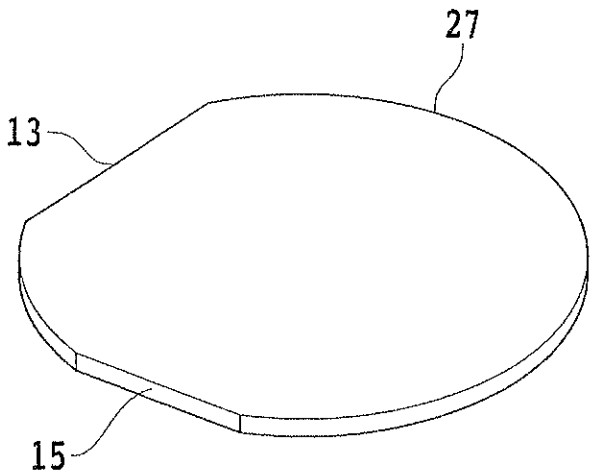

FIG. 11A

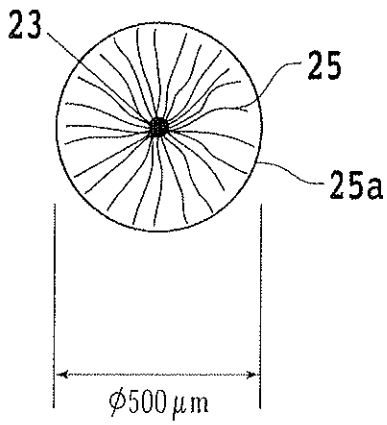

FIG. 11B

