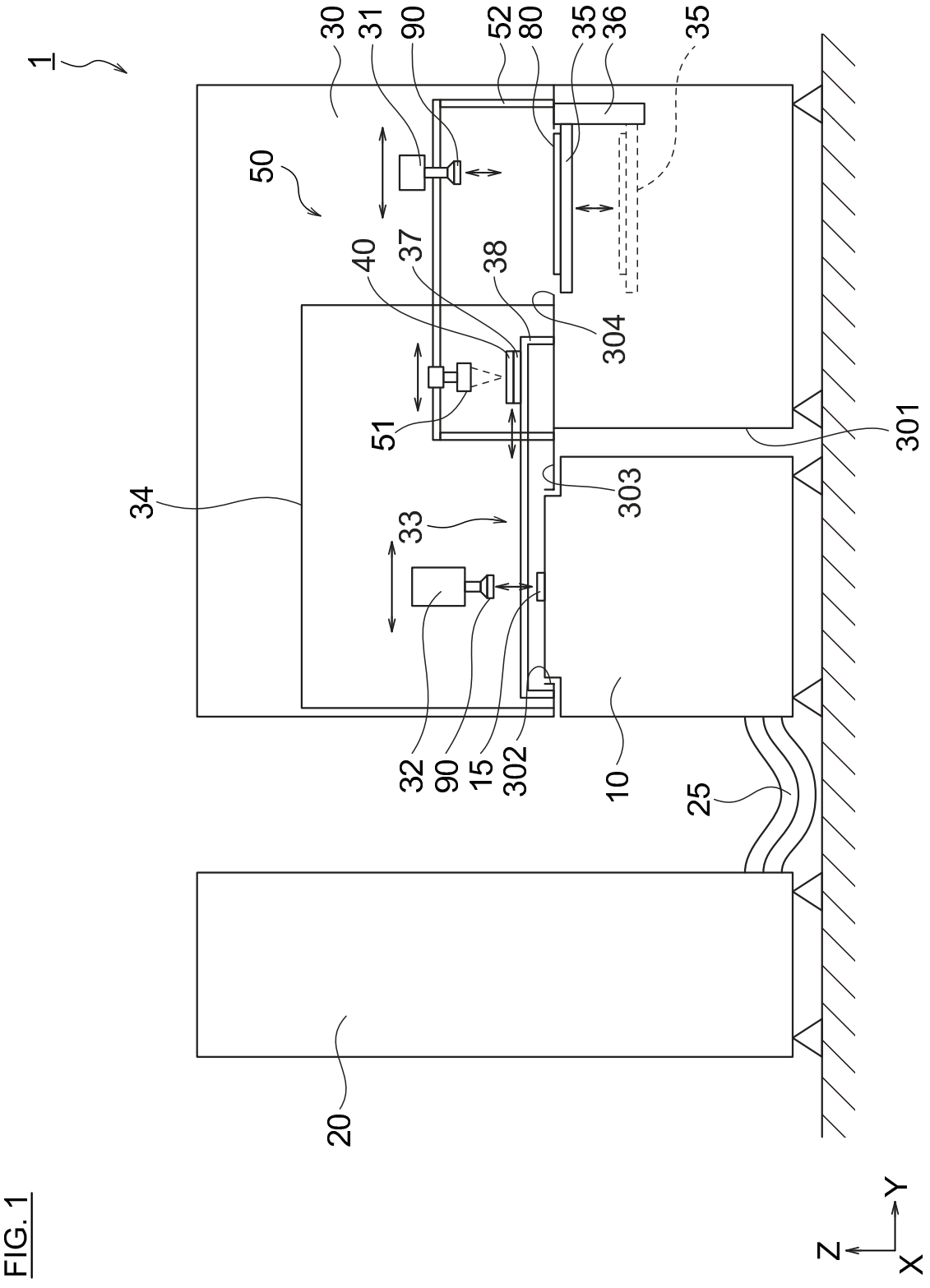
1
30
31
90
52
80
35
36
35
50
40
37
38
304
51
301
34
303
33
32
90
15
302
10
25
20
Z
Y
X

FIG. 1

FIG. 2

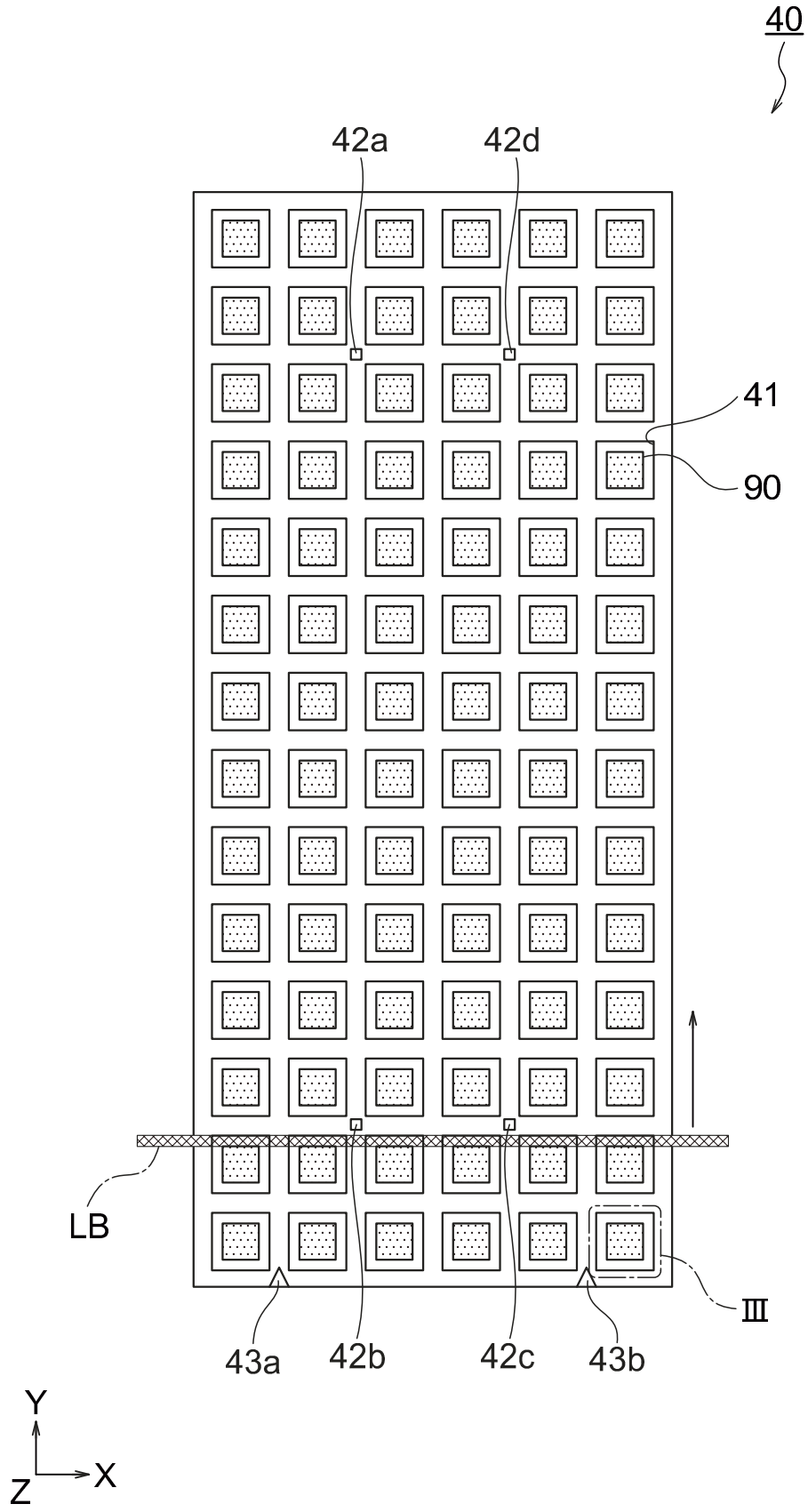

FIG. 3

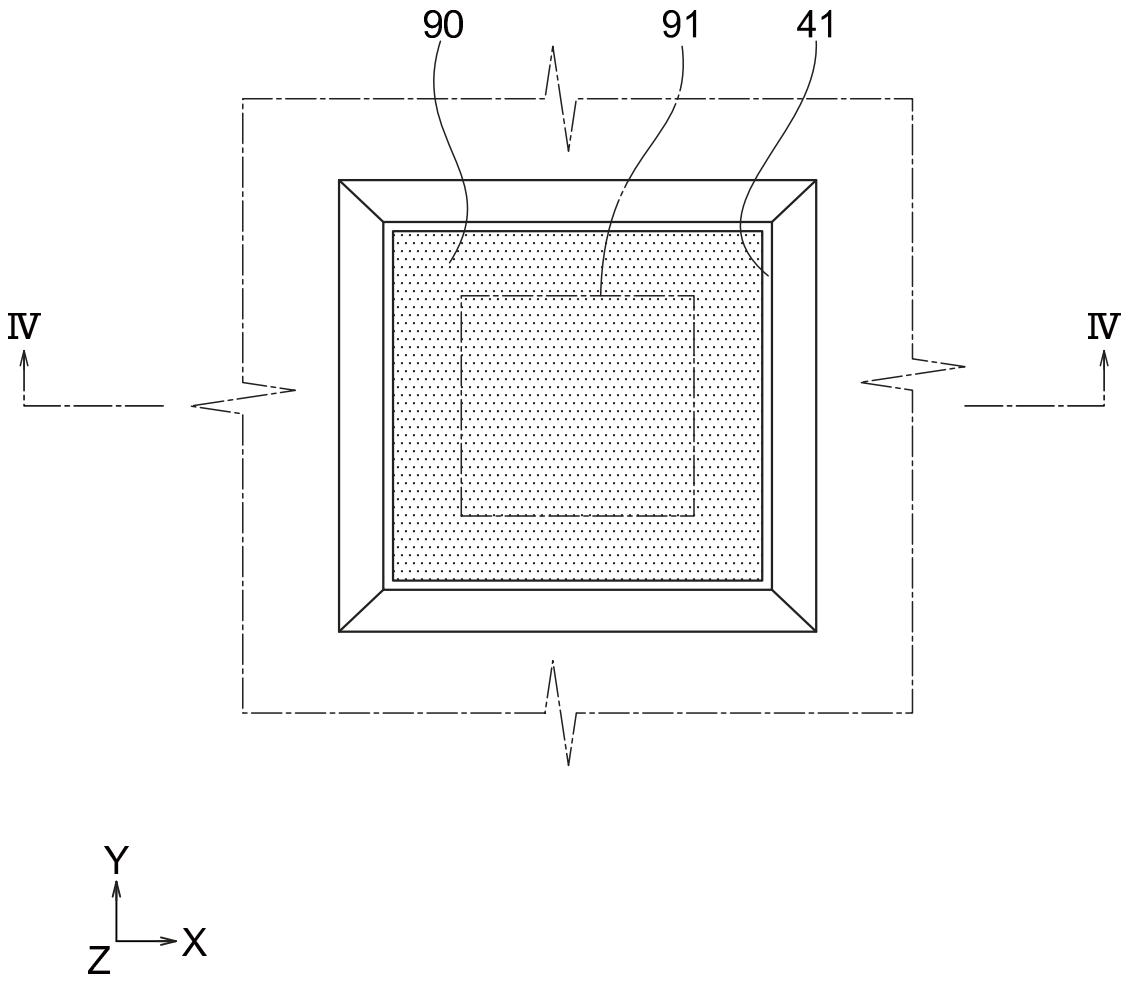

FIG. 4

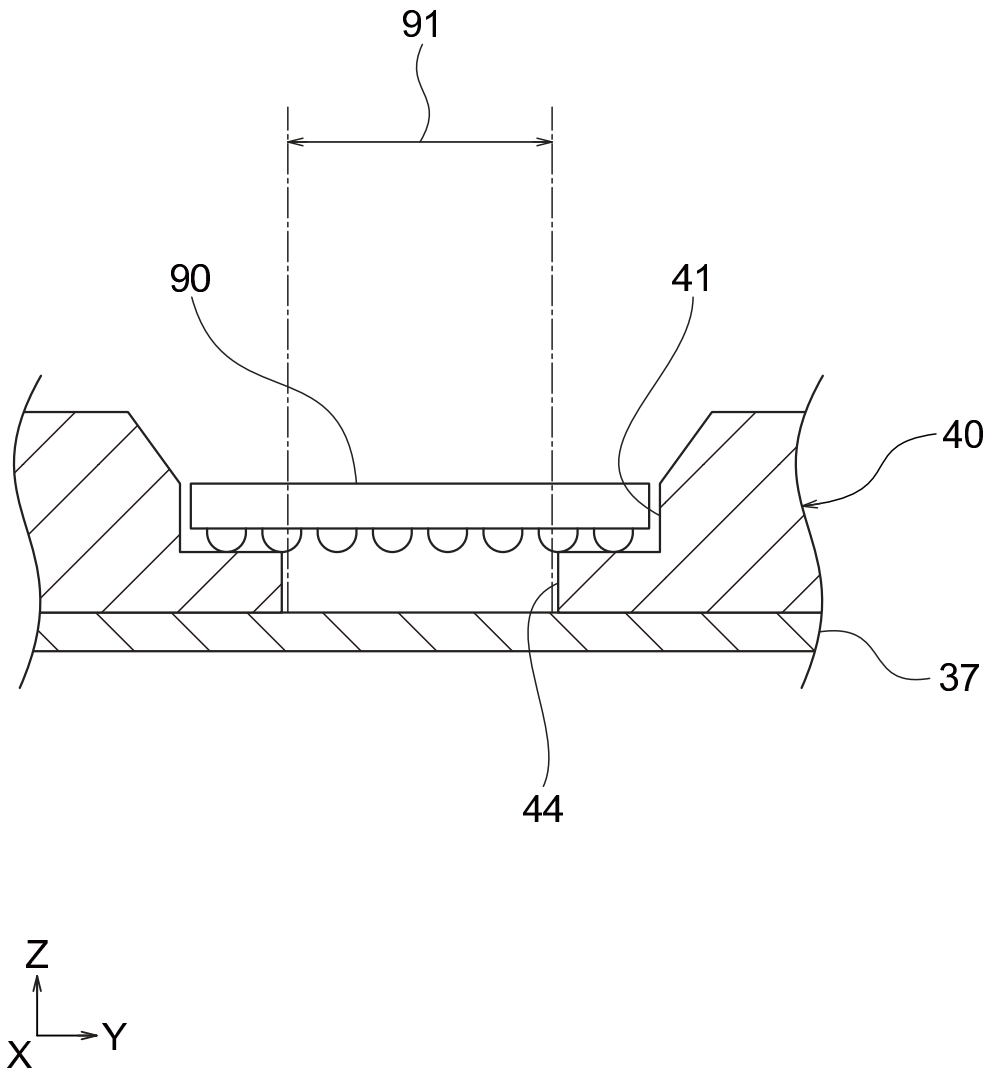

FIG. 7B

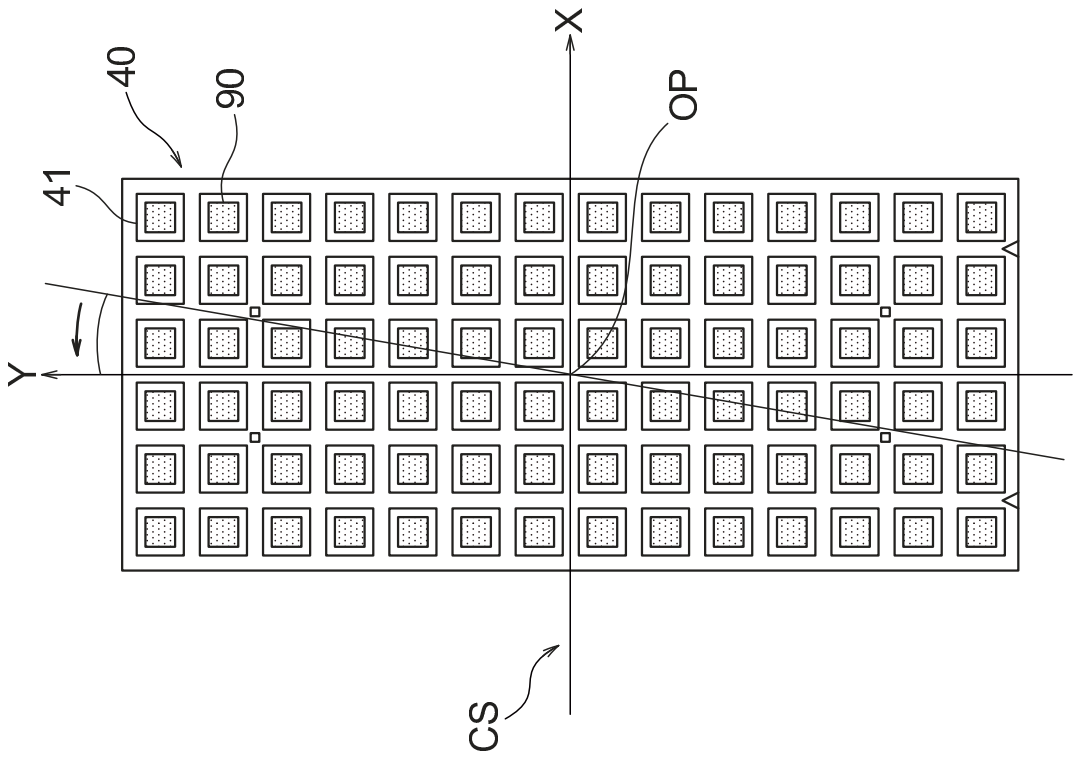

FIG. 7A

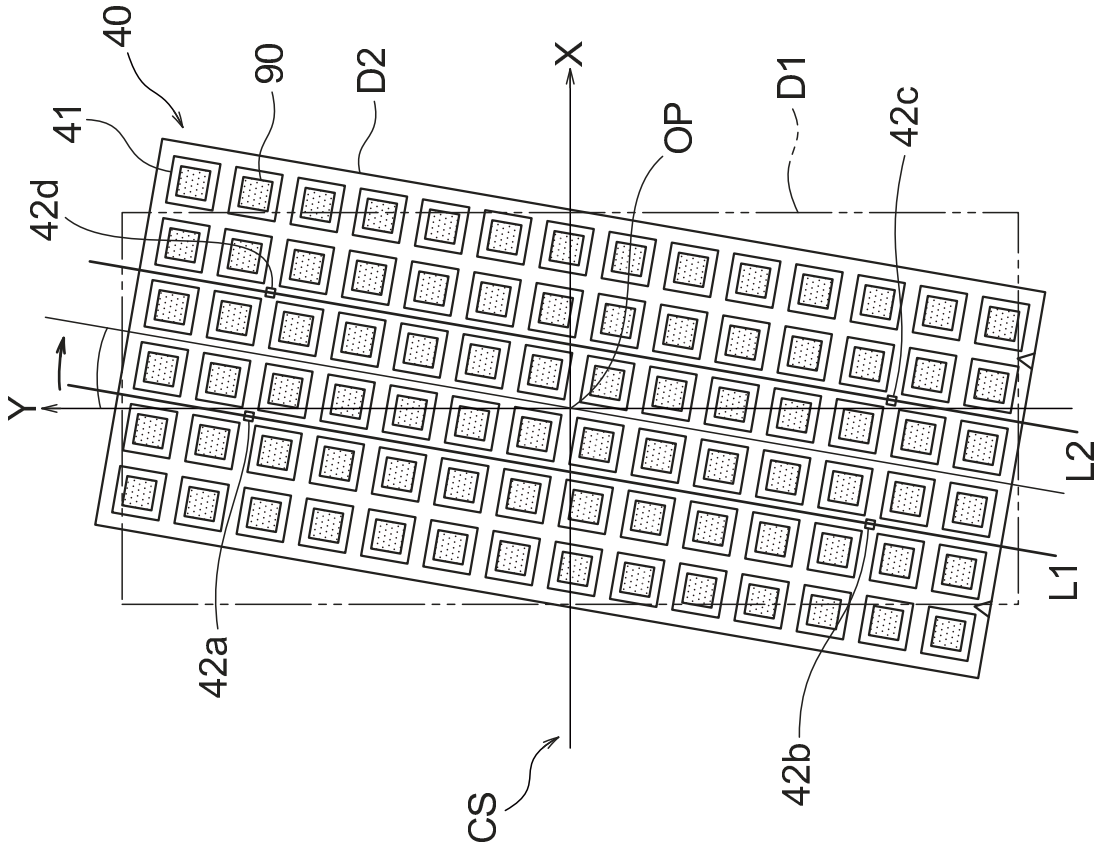

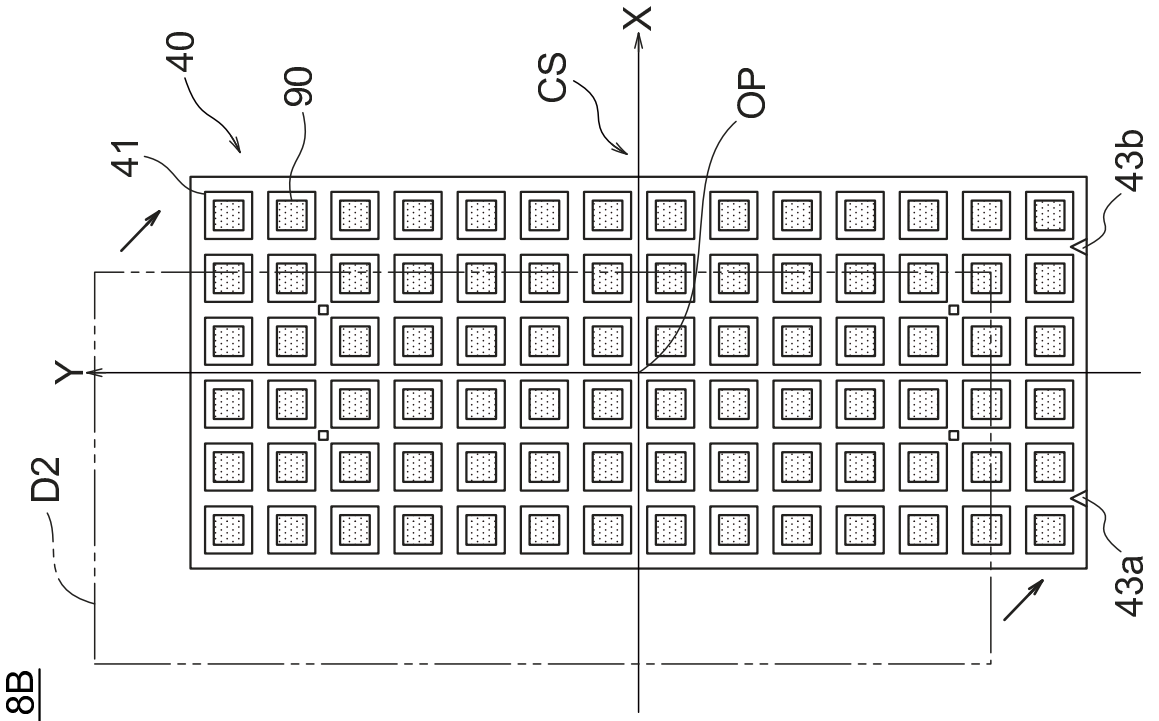

FIG. 8B

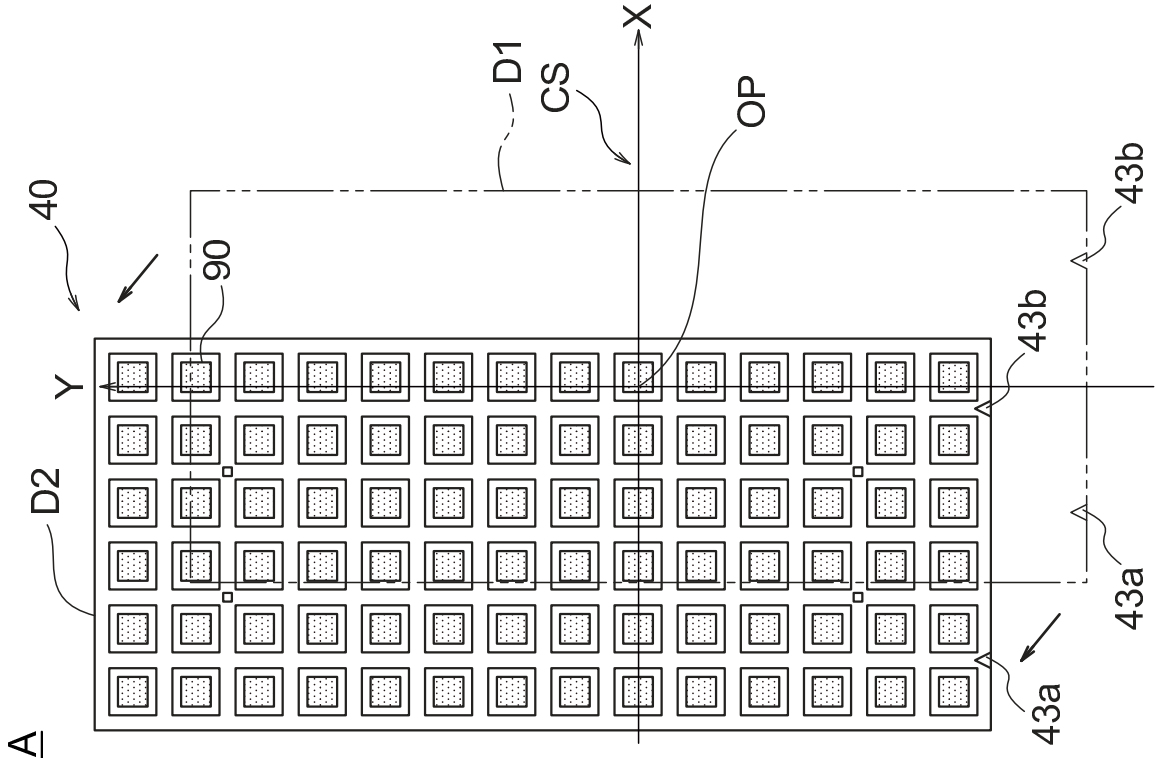

FIG. 8A

FIG. 9B

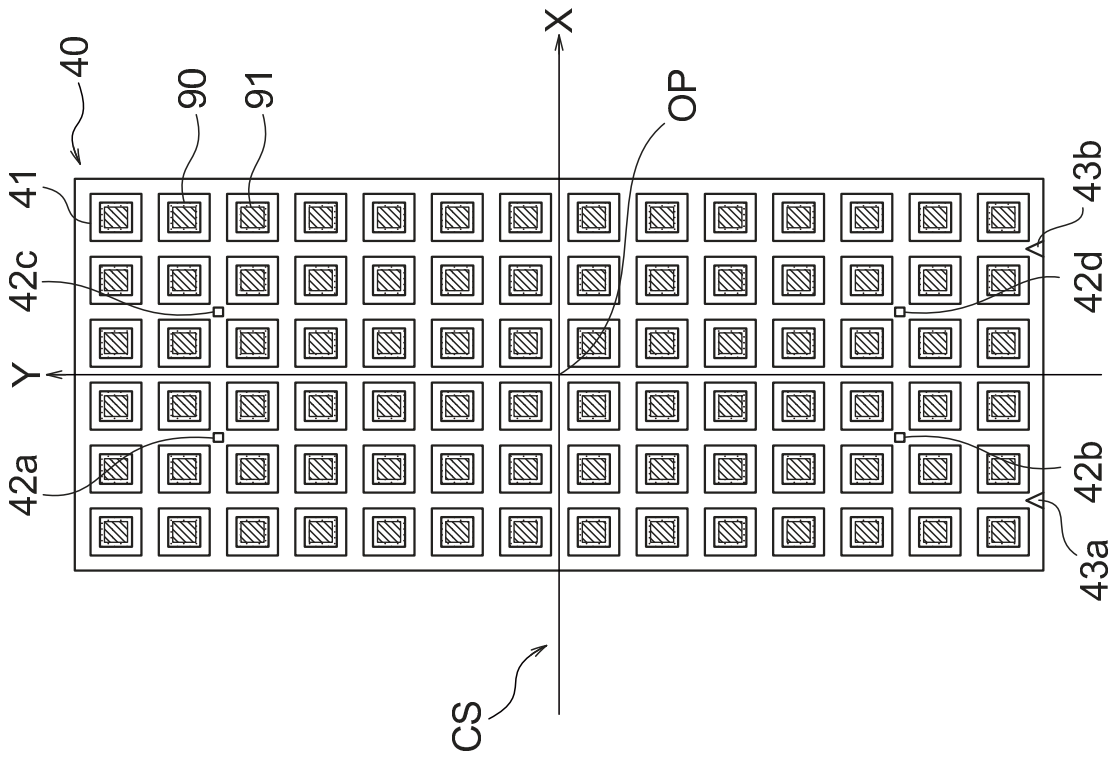
40
90
91
X
OP
41
42c
Y
42a
43b
42d
42b
43a
CS

FIG. 9A

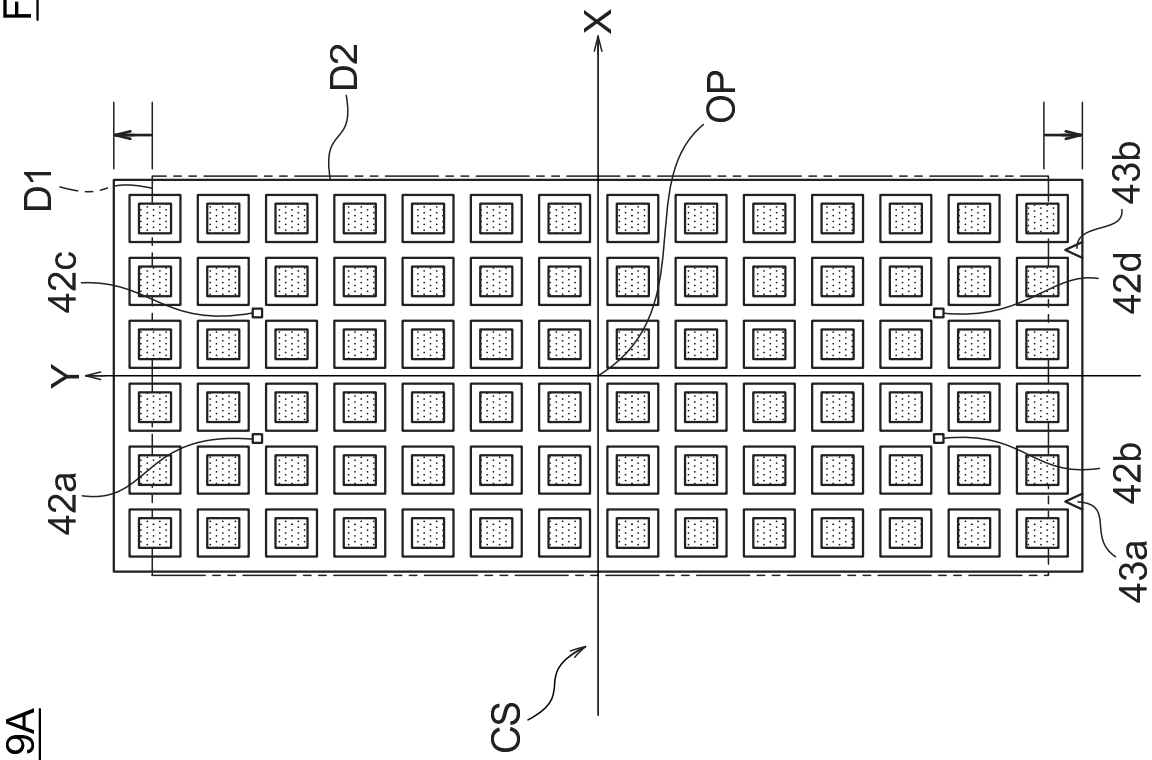
X
D2
OP
D1
42c
Y
42a
43b
42d
42b
43a
CS

FIG. 5

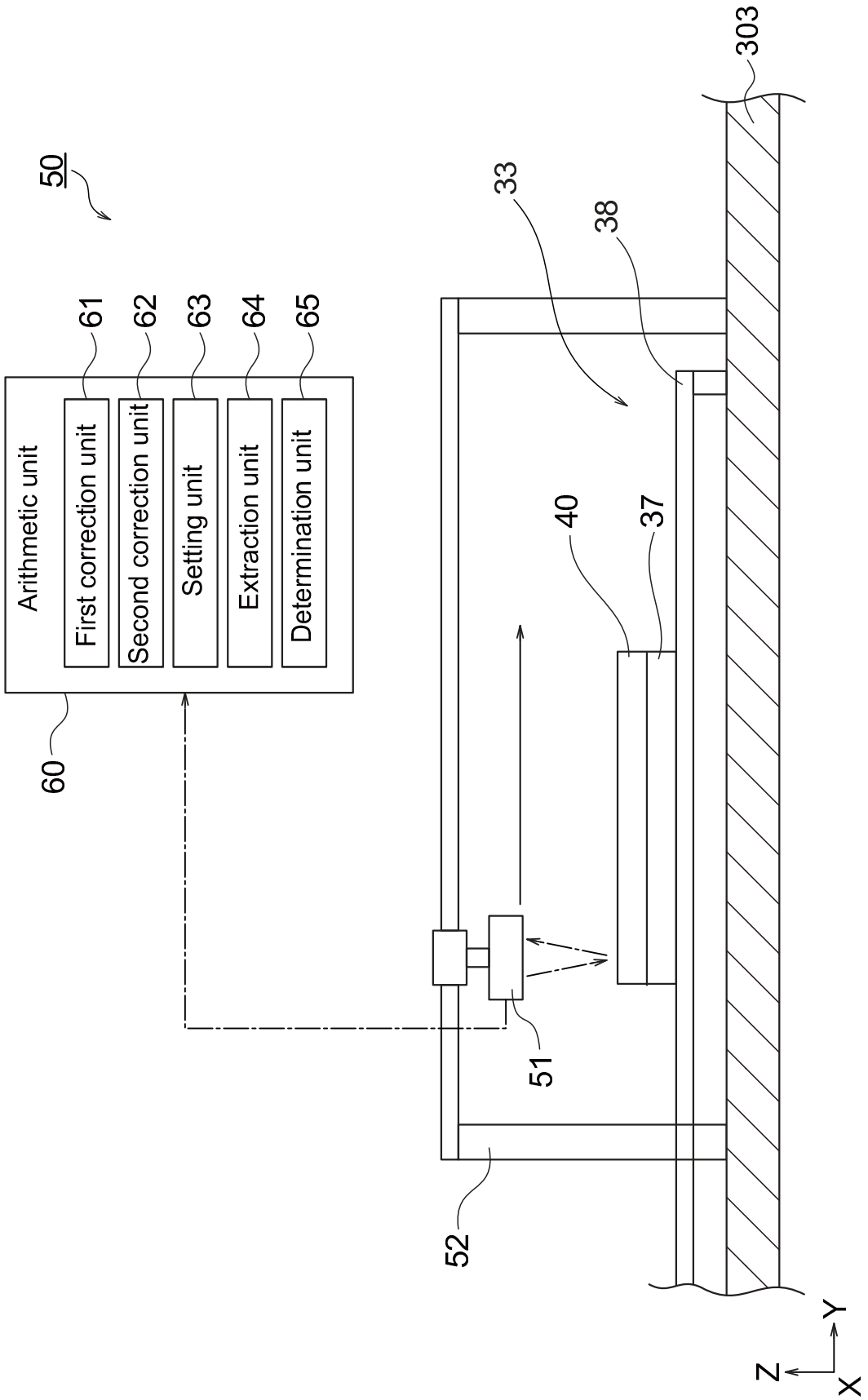
50
Arithmetic unit
First correction unit
Second correction unit
Setting unit
Extraction unit
Determination unit
61
62
63
64
65
60
303
33
38
40
37
51
52
Y
Z
X

FIG. 6

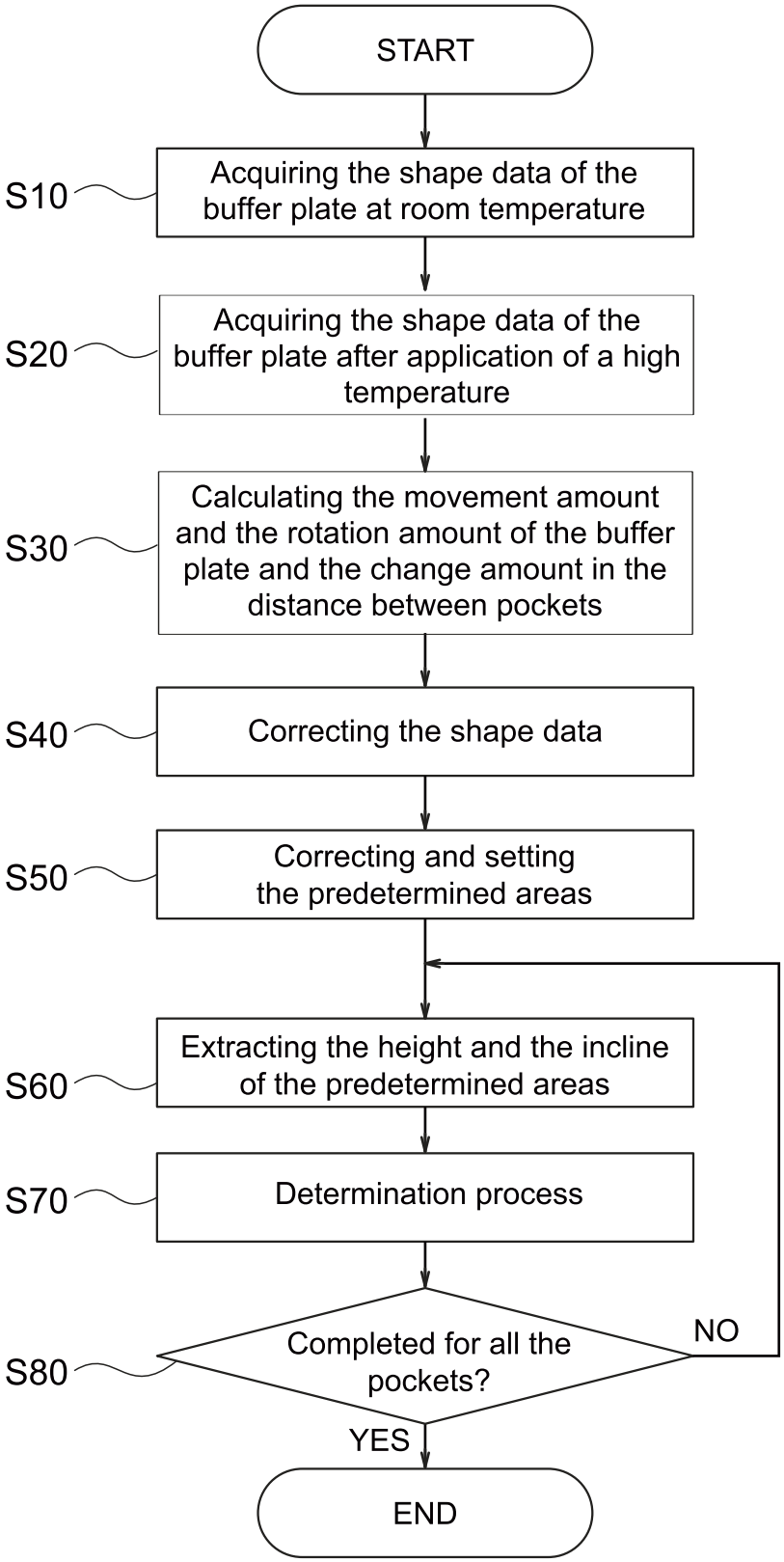
START
S10
Acquiring the shape data of the buffer plate at room temperature
S20
Acquiring the shape data of the buffer plate after application of a high temperature
S30
Calculating the movement amount and the rotation amount of the buffer plate and the change amount in the distance between pockets
S40
Correcting the shape data
S50
Correcting and setting the predetermined areas
S60
Extracting the height and the incline of the predetermined areas
S70
Determination process
S80
Completed for all the pockets?
NO
YES
END

FIG. 10

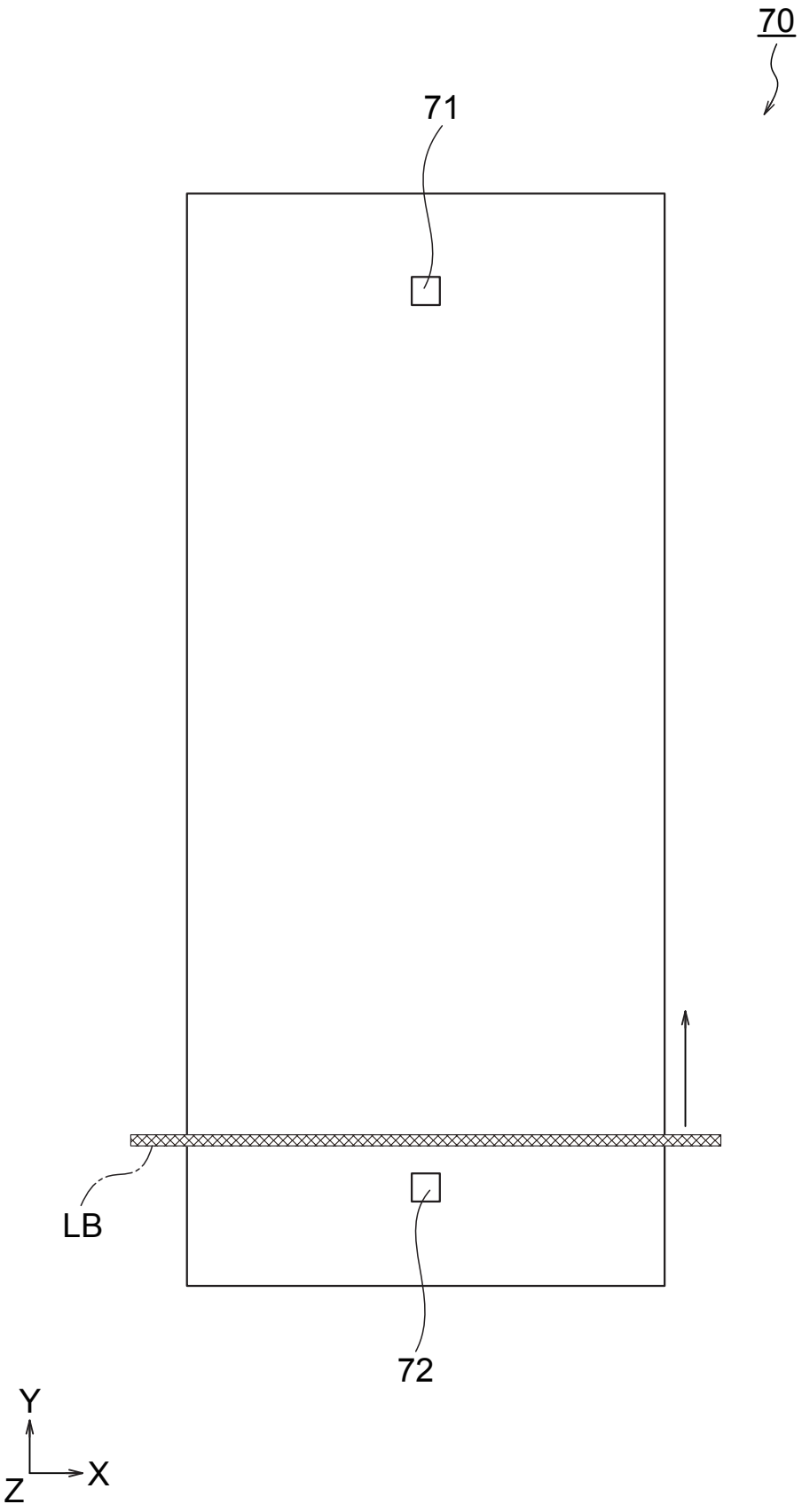

FIG. 11A

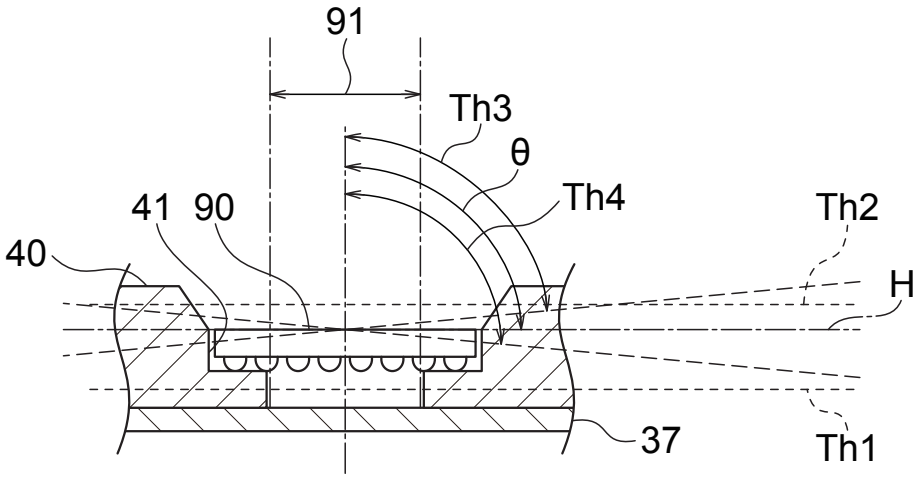

FIG. 11B

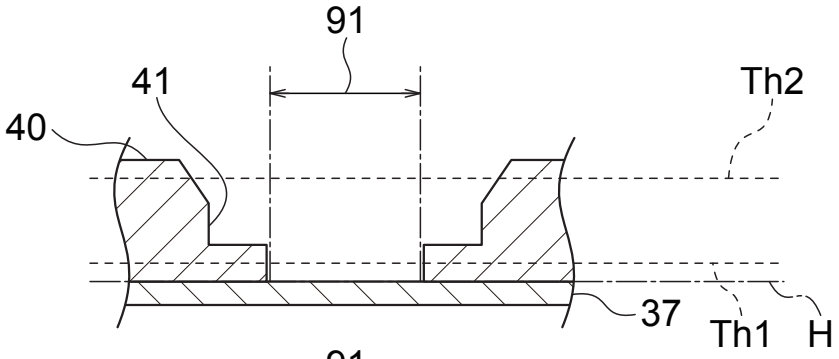

FIG. 11C

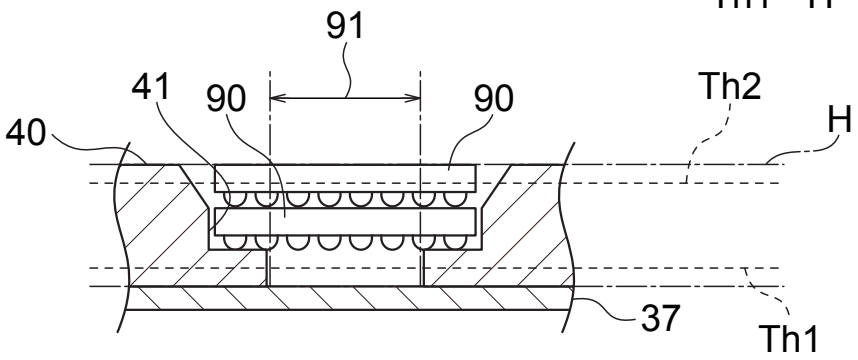

FIG. 11D

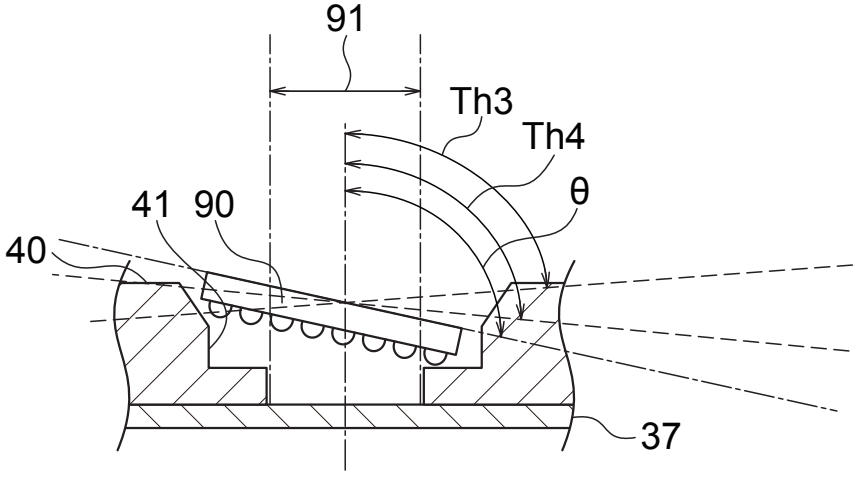

FIG. 12

