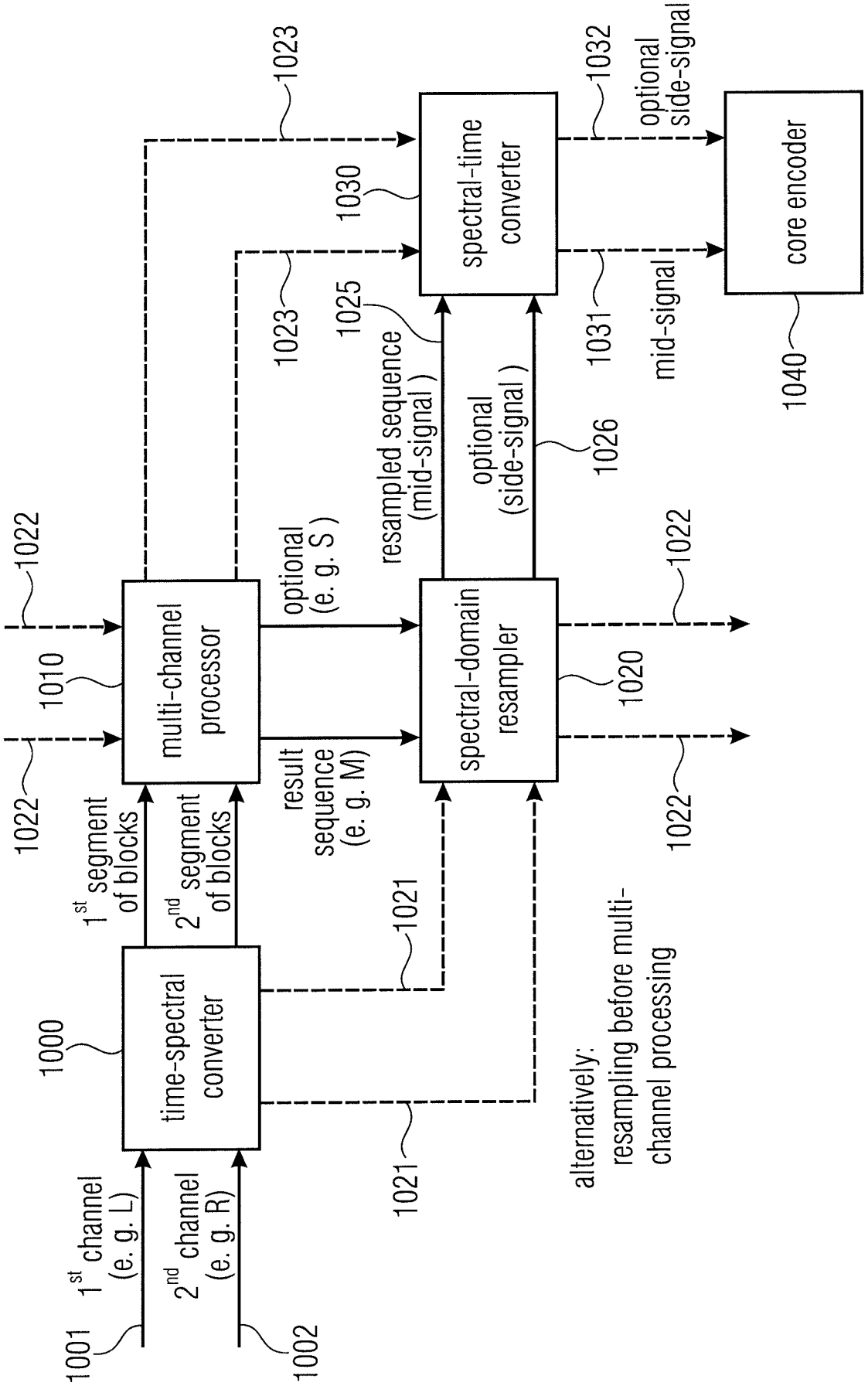
1001
1st channel (e. g. L)
1002
2nd channel (e. g. R)
1000
time-spectral converter
1st segment of blocks
2nd segment of blocks
1021
1021
alternatively: resampling before multi-channel processing
1022
1022
1022
1010
multi-channel processor
1023
1023
optional (e. g. S)
result sequence (e. g. M)
1025
resampled sequence (mid-signal)
optional (side-signal)
1026
1030
spectral-domain resampler
1020
spectral-time converter
1032
optional side-signal
1031
mid-signal
core encoder
1040

Fig. 1

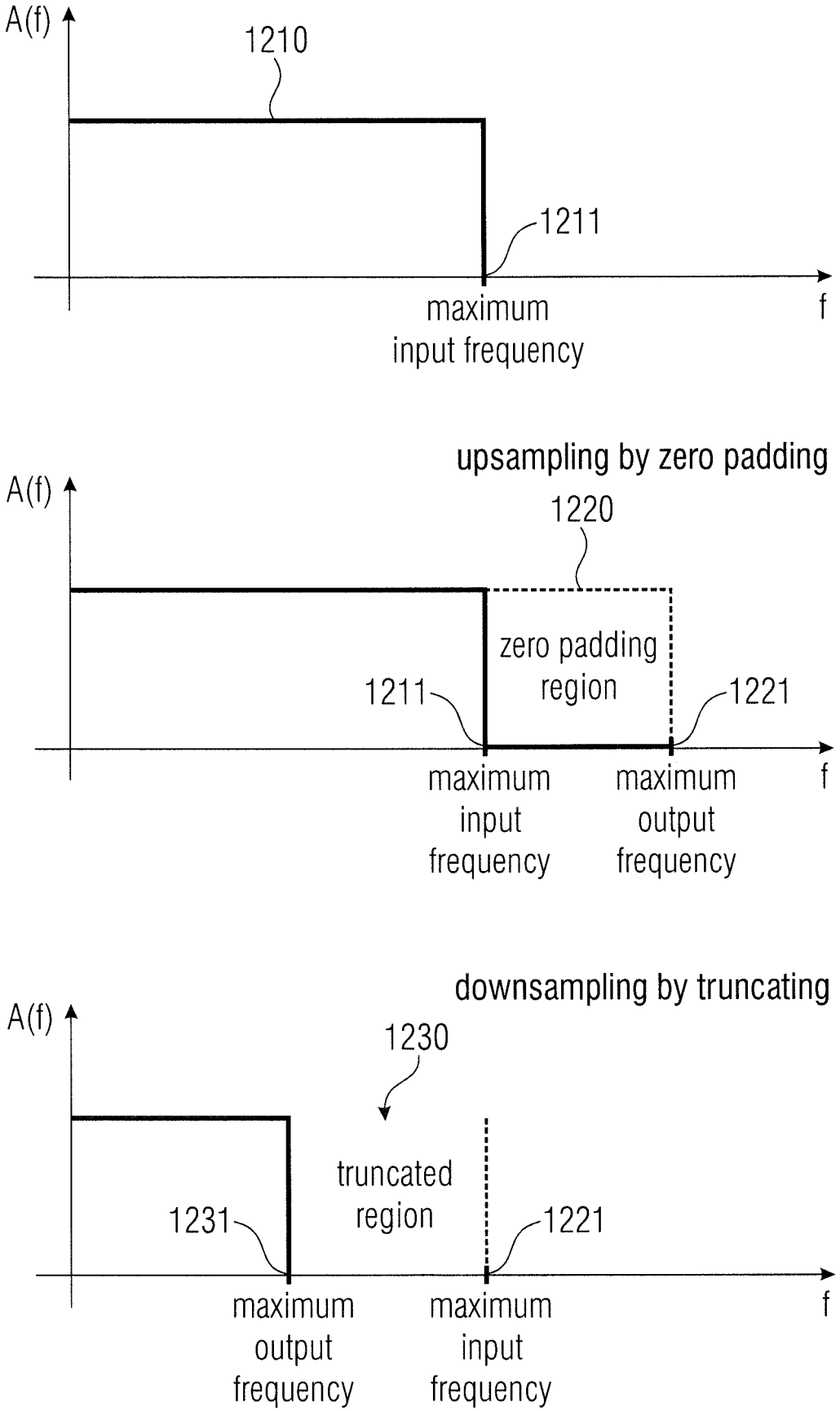
A(f)
1210
1211
maximum
input frequency
f
upsampling by zero padding
A(f)
1220
zero padding
region
1211
1221
maximum
input
frequency
maximum
output
frequency
f
downsampling by truncating
A(f)
1230
truncated
region
1231
1221
maximum
output
frequency
maximum
input
frequency
f

Fig. 2

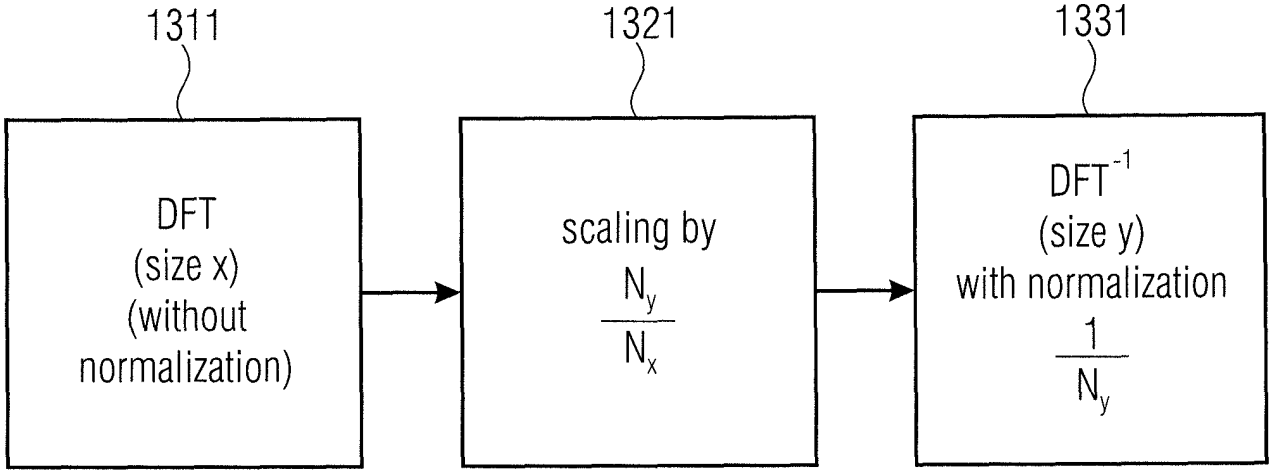

Fig. 3a

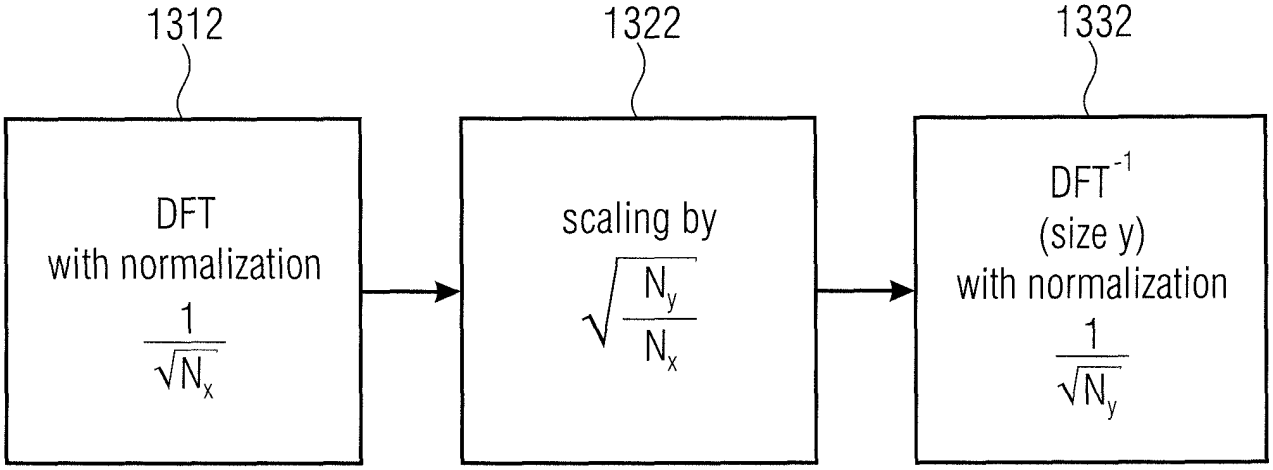

Fig. 3b

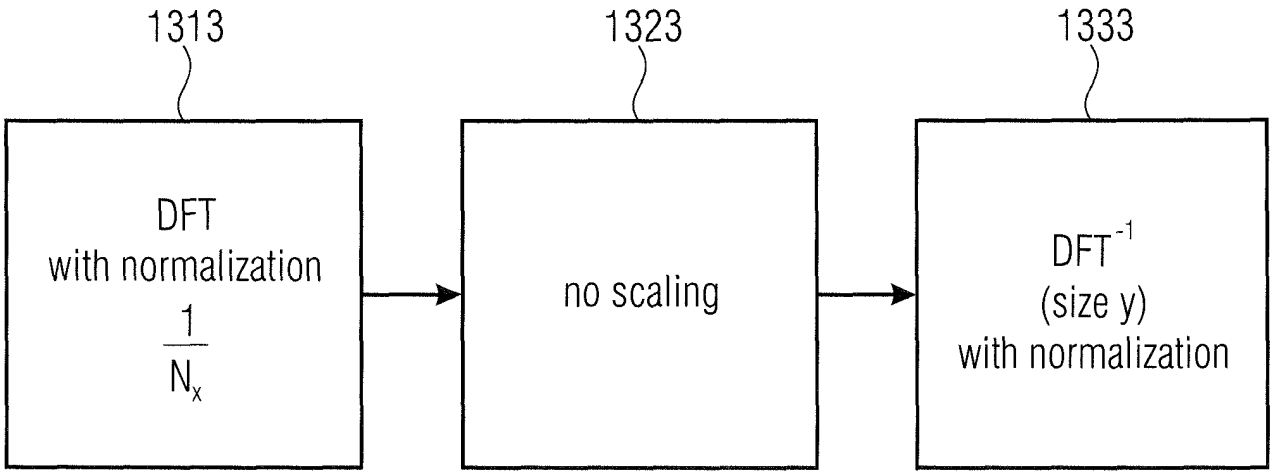

Fig. 3c

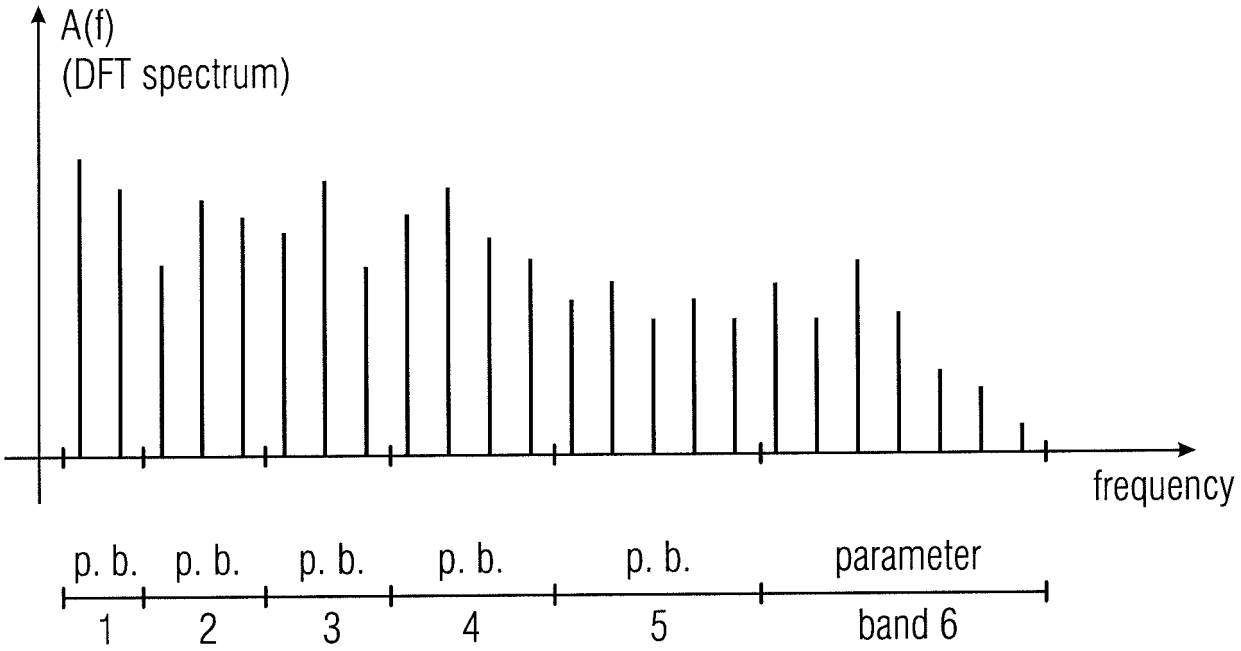

- single broadband alignment parameter for whole spectrum (e. g. p. band 1 to p. band 6);
- plurality of narrowband alignment parameters for parameter bands 1, 2, 3, 4, i. e., four narrowband parameters;
- level parameters for each parameter band, e. g. 6 level parameters;
- stereo filling parameters for parameter bands 4, 5, 6, e. g. three stereo filling parameters;
- side (residual) signal for parameter bands 1, 2, 3;
- more spectral lines in higher band, e.g. seven spectral lines in parameter band 6 versus three spectral lines in parameter band 2.

Fig. 3d

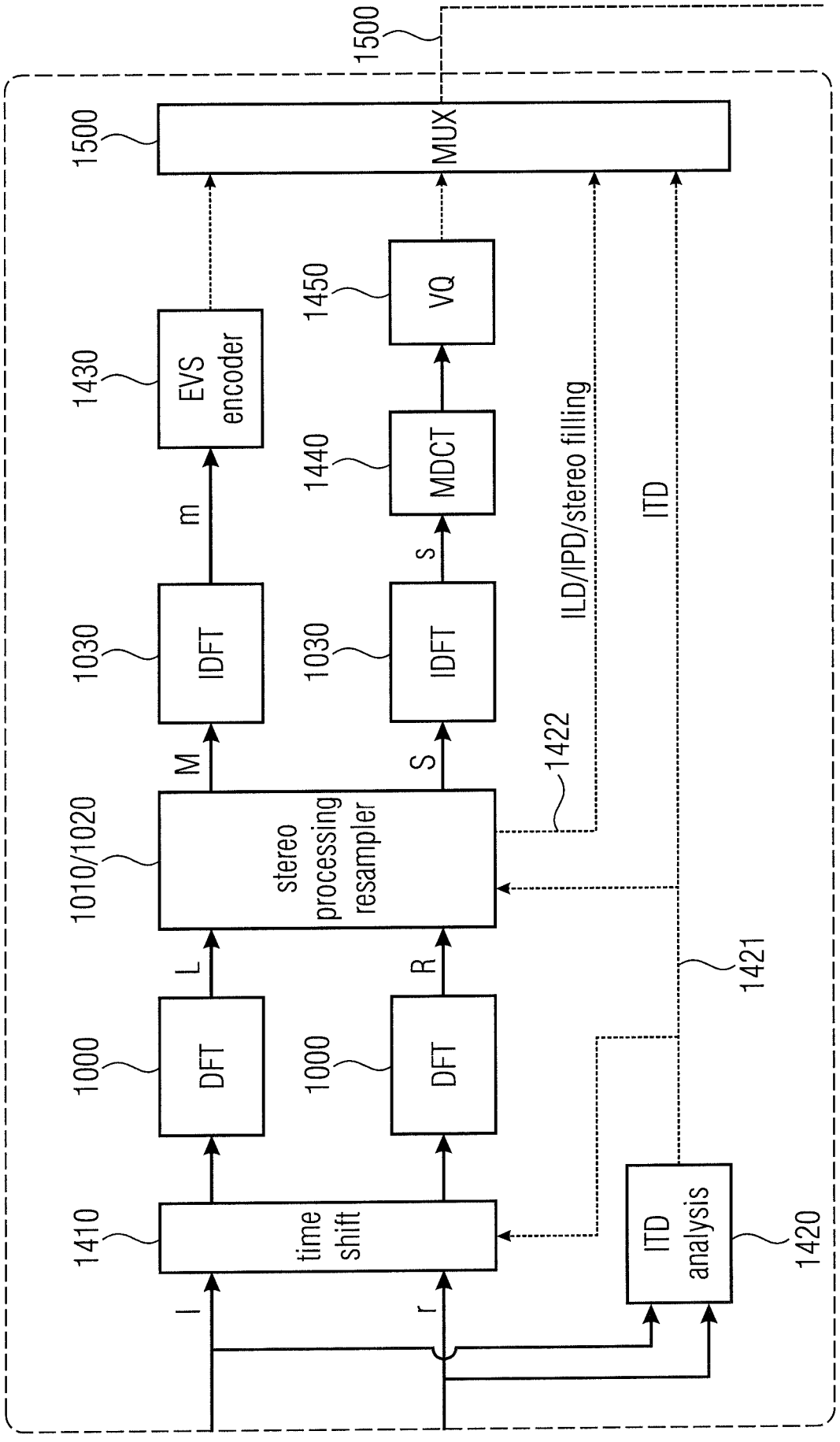
1500
MUX
1450
VQ
1430
EVS encoder
1440
MDCT
1030
IDFT
1030
IDFT
m
s
M
S
1422
ILD/IPD/stereo filling
ITD
1010/1020
stereo processing resampler
L
R
1421
1000
DFT
1000
DFT
1410
time shift
ITD analysis
1420
l
r

Fig. 4a

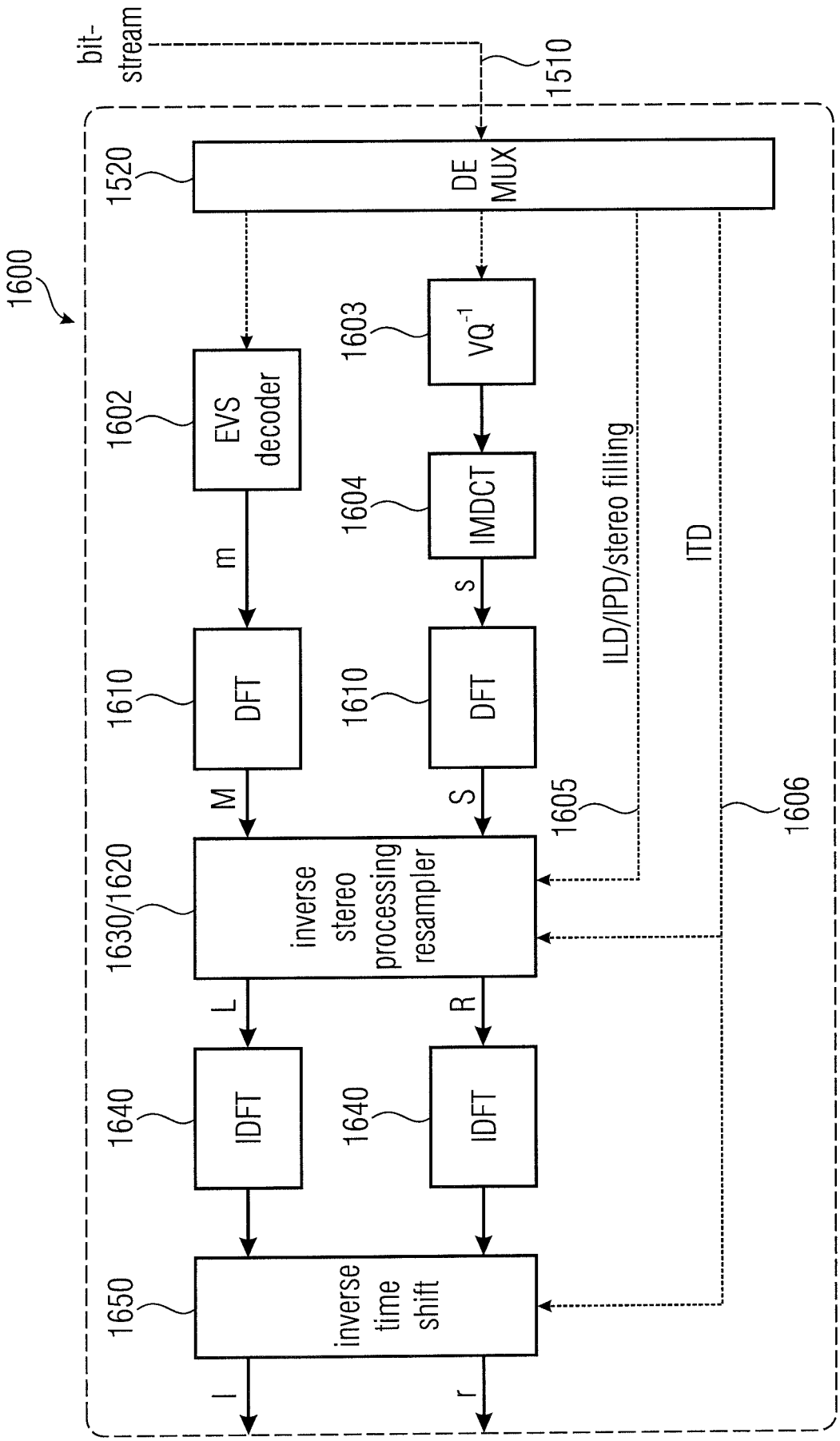
bit-stream
1510
1600
1520
DE MUX
1603
VQ-1
1602
EVS decoder
1604
IMDCT
m
s
1610
DFT
1610
DFT
ILD/IPD/stereo filling
ITD
M
S
1605
1606
1630/1620
inverse stereo processing resampler
L
R
1640
IDFT
1640
IDFT
1650
inverse time shift
l
r

Fig. 4b

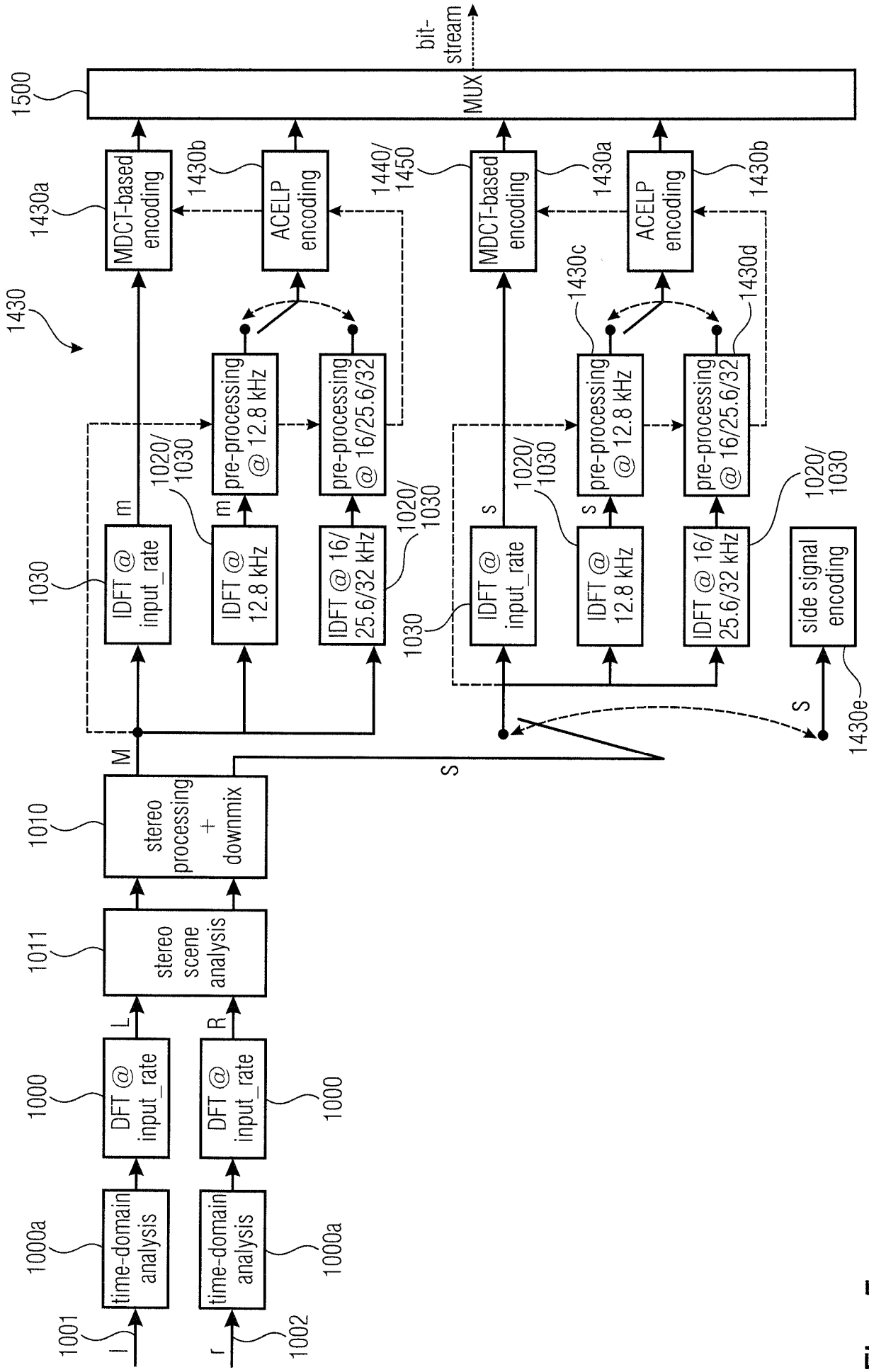
1001
l
1002
r
1000a
time-domain analysis
1000a
time-domain analysis
1000
DFT @ input_rate
1000
DFT @ input_rate
L
R
1011
stereo scene analysis
1010
stereo processing + downmix
M
S
1030
IDFT @ input_rate
m
1020/ 1030
IDFT @ 12.8 kHz
m
1020/ 1030
IDFT @ 16/ 25.6/32 kHz
1020/ 1030
pre-processing @ 12.8 kHz
pre-processing @ 16/25.6/32
1430
1430a
MDCT-based encoding
1430b
ACELP encoding
1440/ 1450
1030
IDFT @ input_rate
s
1020/ 1030
IDFT @ 12.8 kHz
s
1020/ 1030
IDFT @ 16/ 25.6/32 kHz
1020/ 1030
pre-processing @ 12.8 kHz
1430c
pre-processing @ 16/25.6/32
1430d
1430a
MDCT-based encoding
1430b
ACELP encoding
side signal encoding
S
1430e
1500
MUX
bit-stream

Fig. 5

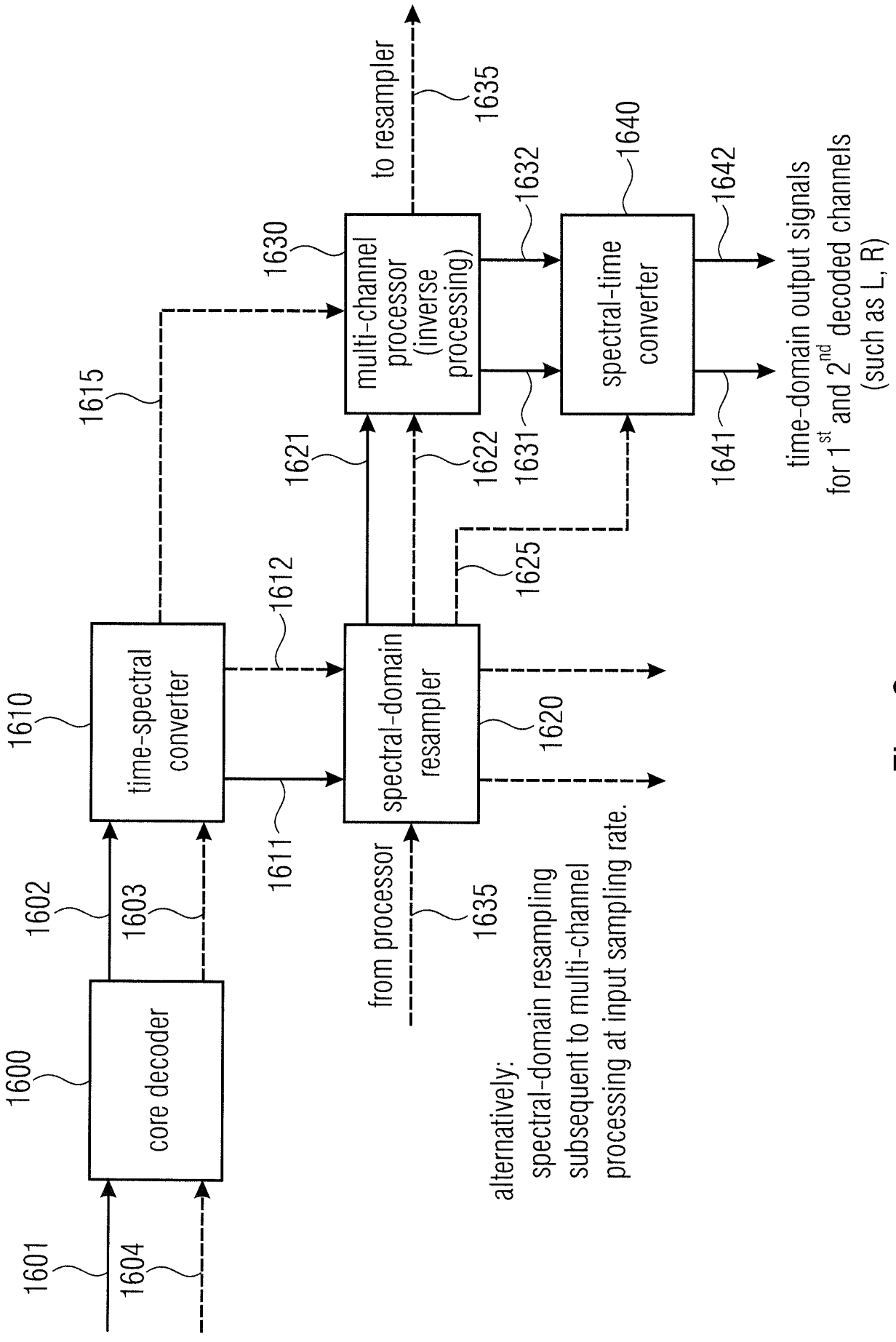
core decoder
1600
1601
1604
time-spectral converter
1610
1602
1603
1611
1612
spectral-domain resampler
1620
from processor
1635
alternatively:
spectral-domain resampling subsequent to multi-channel processing at input sampling rate.
1615
1621
1622
multi-channel processor (inverse processing)
1630
to resampler
1635
1625
1631
1632
spectral-time converter
1640
1641
1642
time-domain output signals for 1st and 2nd decoded channels (such as L, R)

Fig. 6

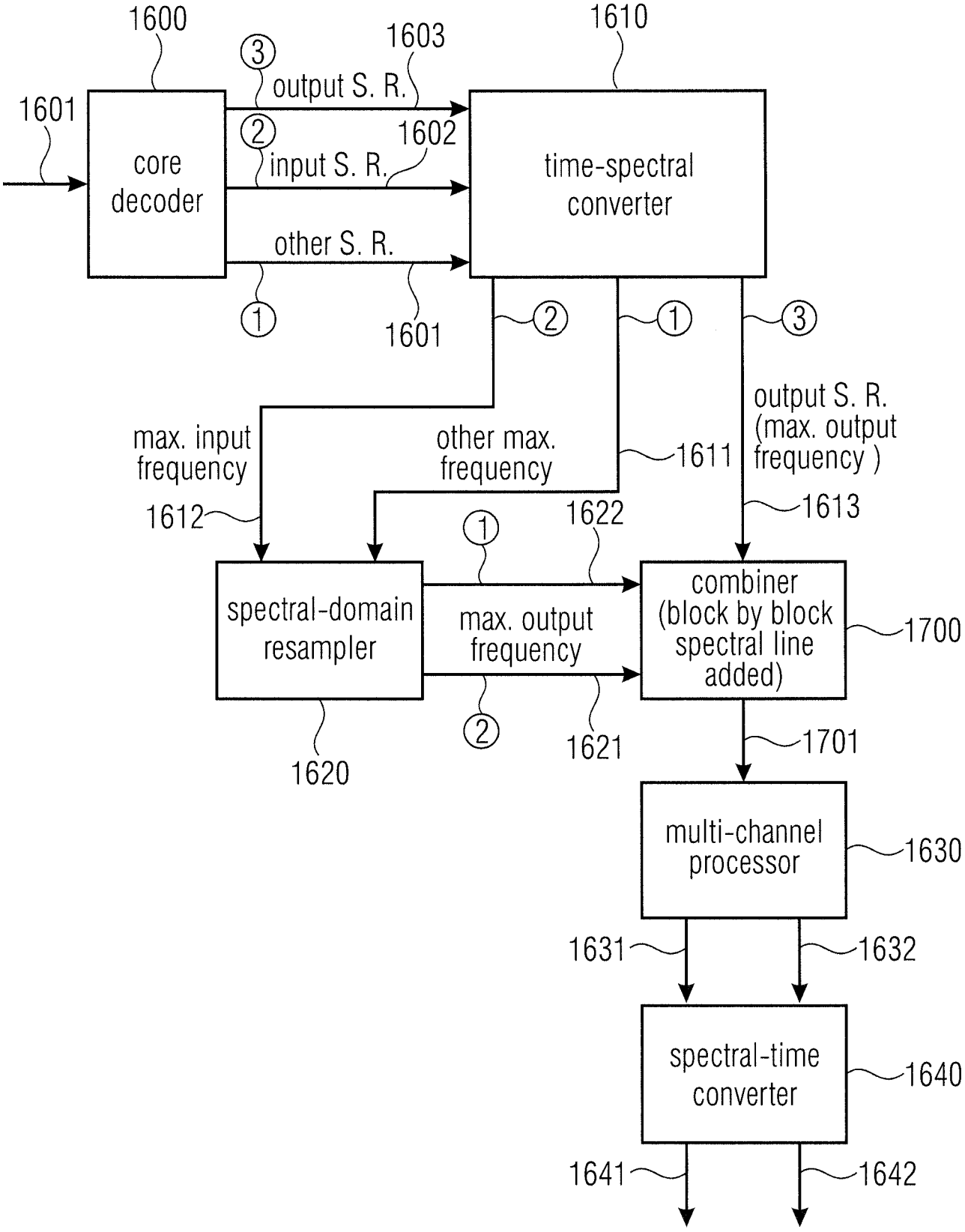
1600
1601
core decoder
3
output S. R.
1603
2
input S. R.
1602
other S. R.
1
1601
1610
time-spectral converter
2
1
3
output S. R. (max. output frequency)
1613
max. input frequency
1612
other max. frequency
1611
1622
1
spectral-domain resampler
max. output frequency
2
1620
1621
combiner (block by block spectral line added)
1700
1701
multi-channel processor
1630
1631
1632
spectral-time converter
1640
1641
1642

Fig. 7a

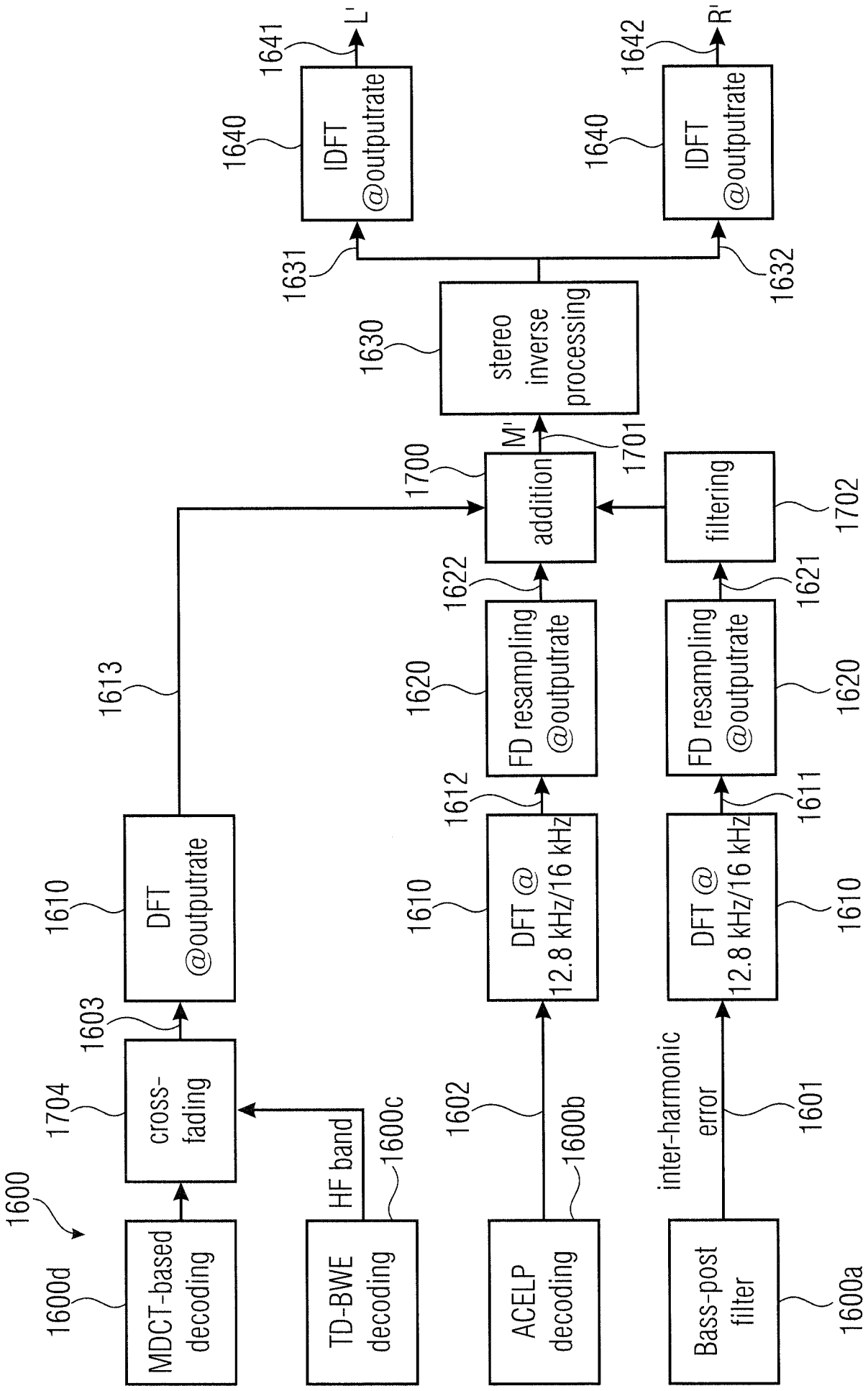
1600
1600d
MDCT-based decoding
1600c
HF band
TD-BWE decoding
1600b
ACELP decoding
1601
inter-harmonic error
1600a
Bass-post filter
1704
cross-fading
1603
1610
DFT @outputrate
1613
1602
1610
DFT @ 12.8 kHz/16 kHz
1612
1620
FD resampling @outputrate
1622
1611
1610
DFT @ 12.8 kHz/16 kHz
1621
1620
FD resampling @outputrate
1700
addition
M'
1701
1702
filtering
1630
stereo inverse processing
1631
1632
1640
IDFT @outputrate
1641
L'
1640
IDFT @outputrate
1642
R'

Fig. 7b

	Duration (ms)	Samples @12.8 kHz	Samples @16 kHz	Samples @32 kHz	Samples @48 kHz
zero padding	3.125	40	50	100	150
overlapping	8.75	112	140	280	420
middle part	1.25	16	20	40	60
window size	25	320	400	800	1200
DFT max radix		5	5	5	5

Fig. 8a

proposal number	filterband/ block transform type	delay total	delay encoder	delay decoder	available delay at decoder side after core decoder	freq. resolution of filterband/ block transforn	time resolution of filterband/ block transforn
1	DFT	38.75 ms	8.75 ms	10 ms	1.25 ms	53.3 Hz	10 ms
2	DFT	38.75 ms	8.75 ms	10 ms	0 ms	53.3/34.8 Hz	10/20 ms
3	CLDFB	38.75 + x ms	13.75 ms	5 + x ms	x ms	400 Hz	1.25 ms
4	DFT	48.75 ms	17.5 ms	11.25 ms	2.5 ms	53.3 Hz	10 ms
5	DFT	40 ms	13.75 ms	6.25 ms	1.25 ms	100 Hz	5 ms

Fig. 8b

SUBSTITUTE SHEET (RULE 26)

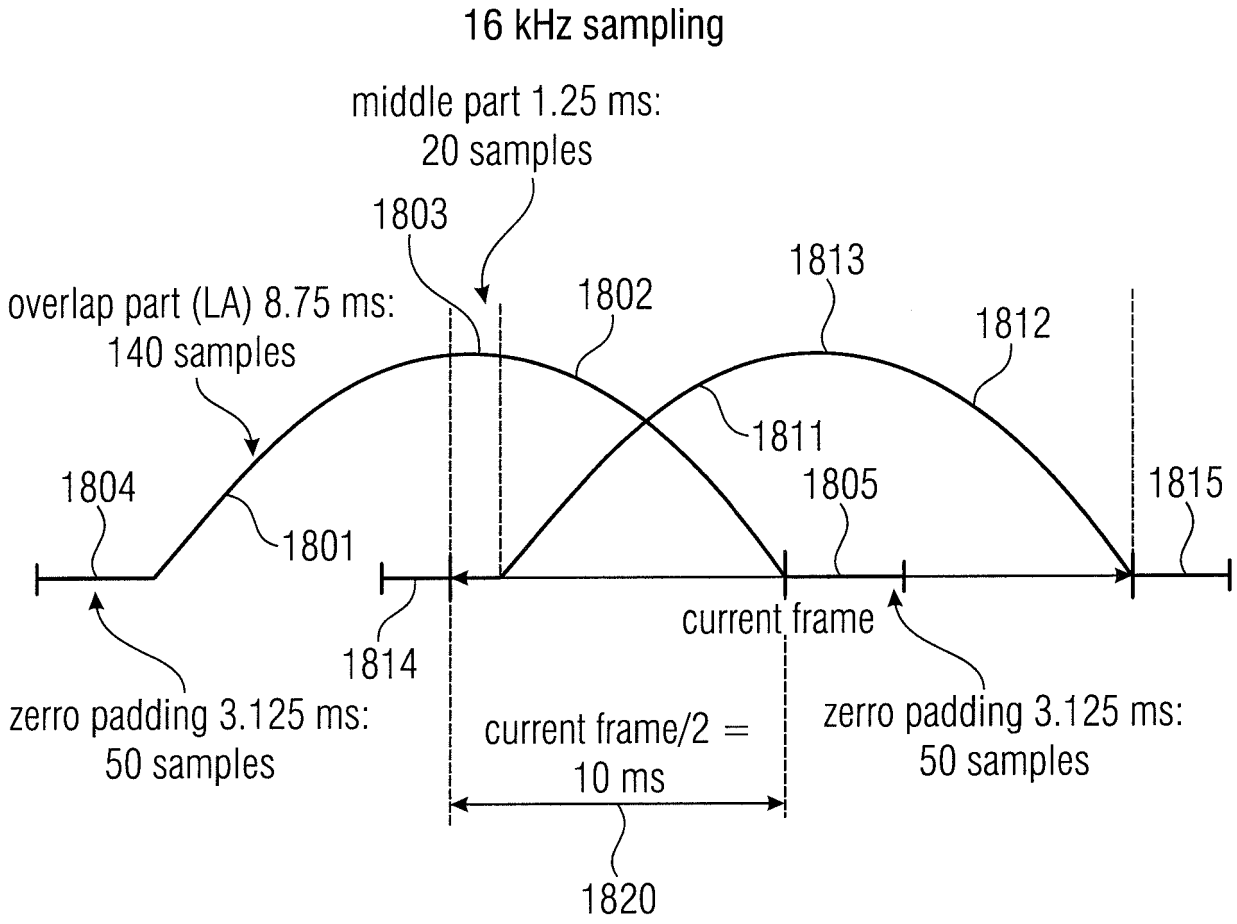

the ascending ovlp_size coefficients are given by:

win_ovlp(k) = sin(pi*(k + 0.5)/(2*ovlp_size));,

for k = 0..ovlp_size - 1

the descending ovlp_size coefficients are given by:

win_ovlp(k) = sin(pi*(ovlp_size - 1 - k + 0.5)/(2*ovlp_size));,

for k = 0..ovlp_size - 1

where ovlp_size is function of the sampling rate and given in Fig. 8a.

Fig. 8c

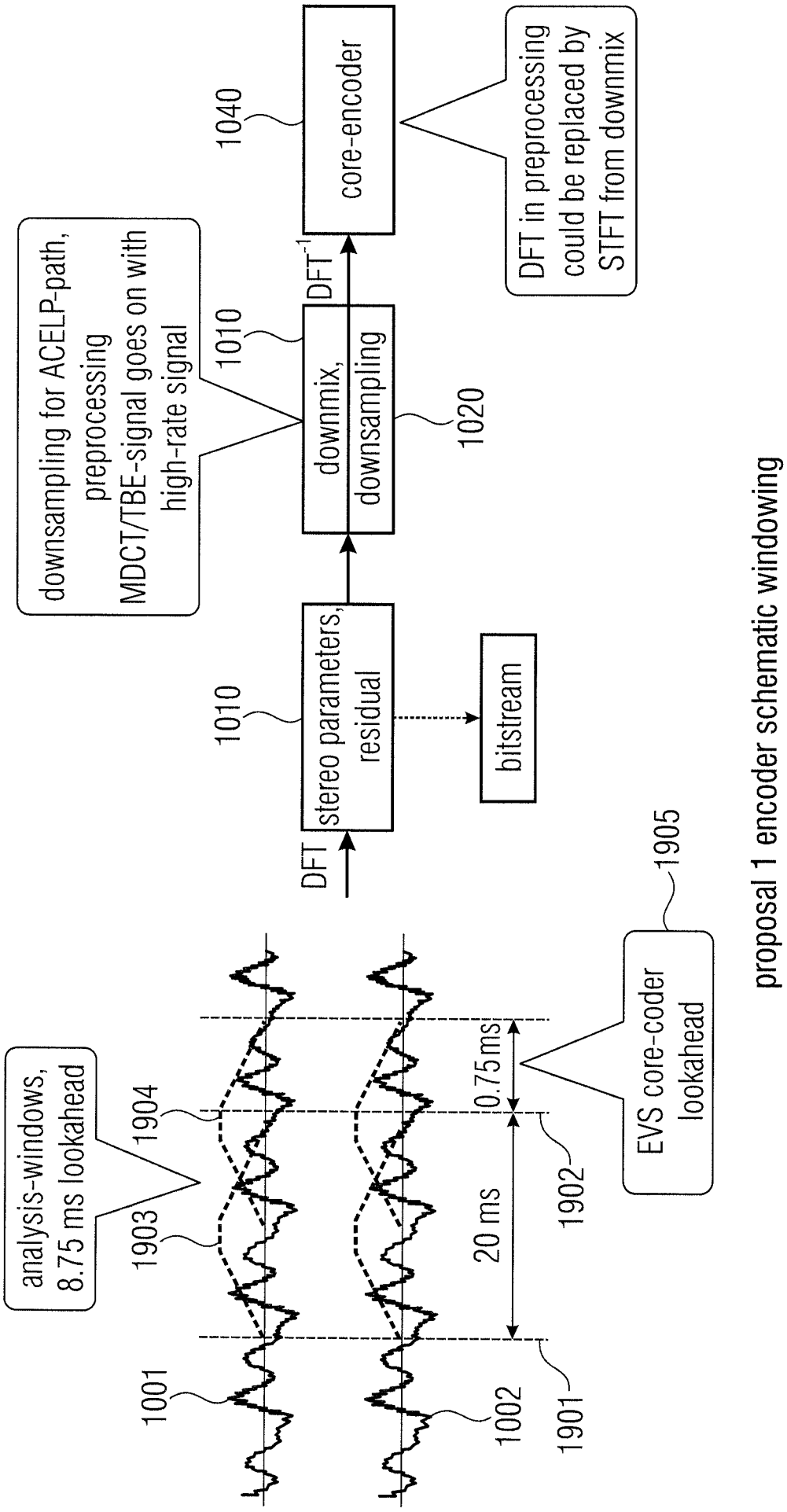

proposal 1 encoder schematic windowing

Fig. 9a

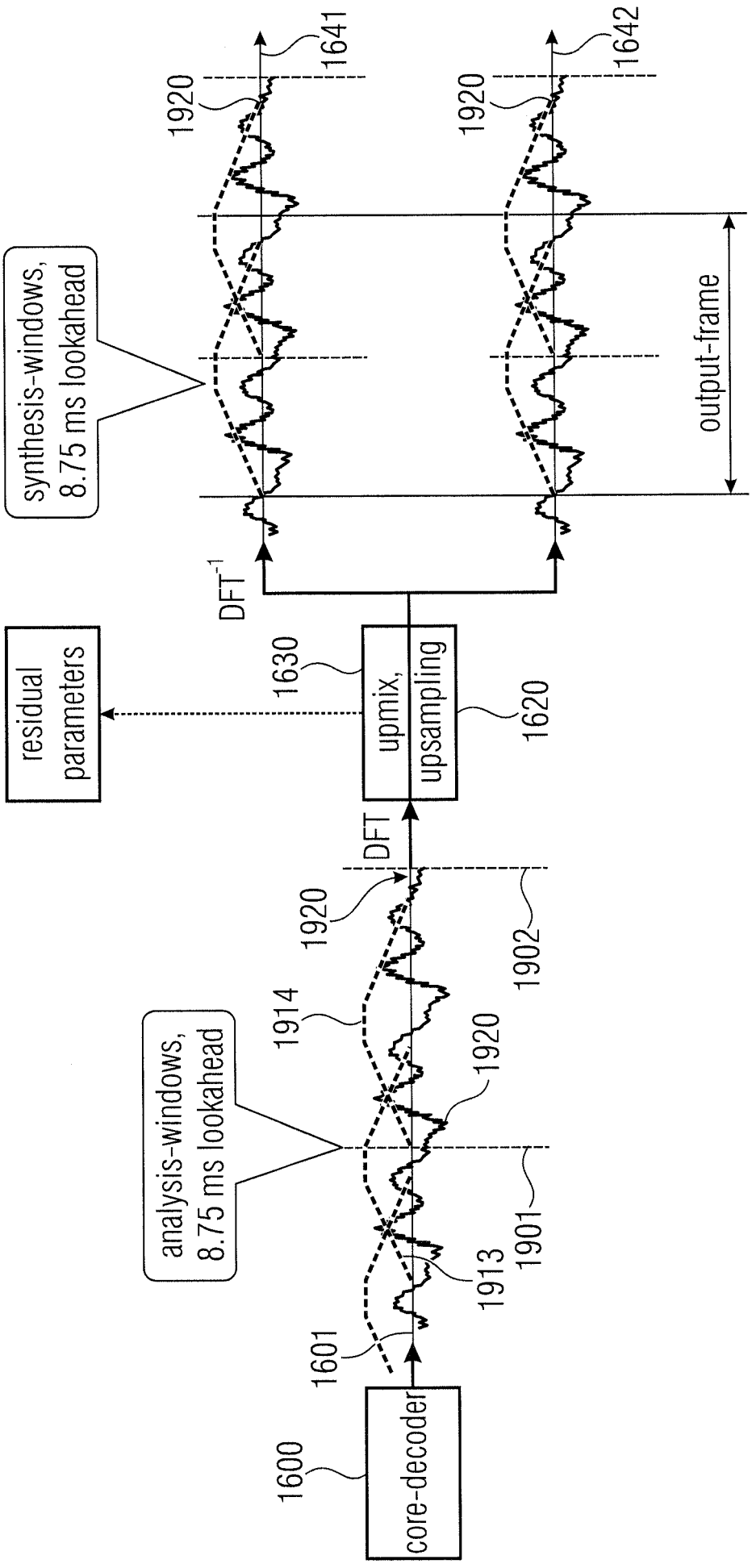

proposal 1 decoder schematic windowing

Fig. 9b

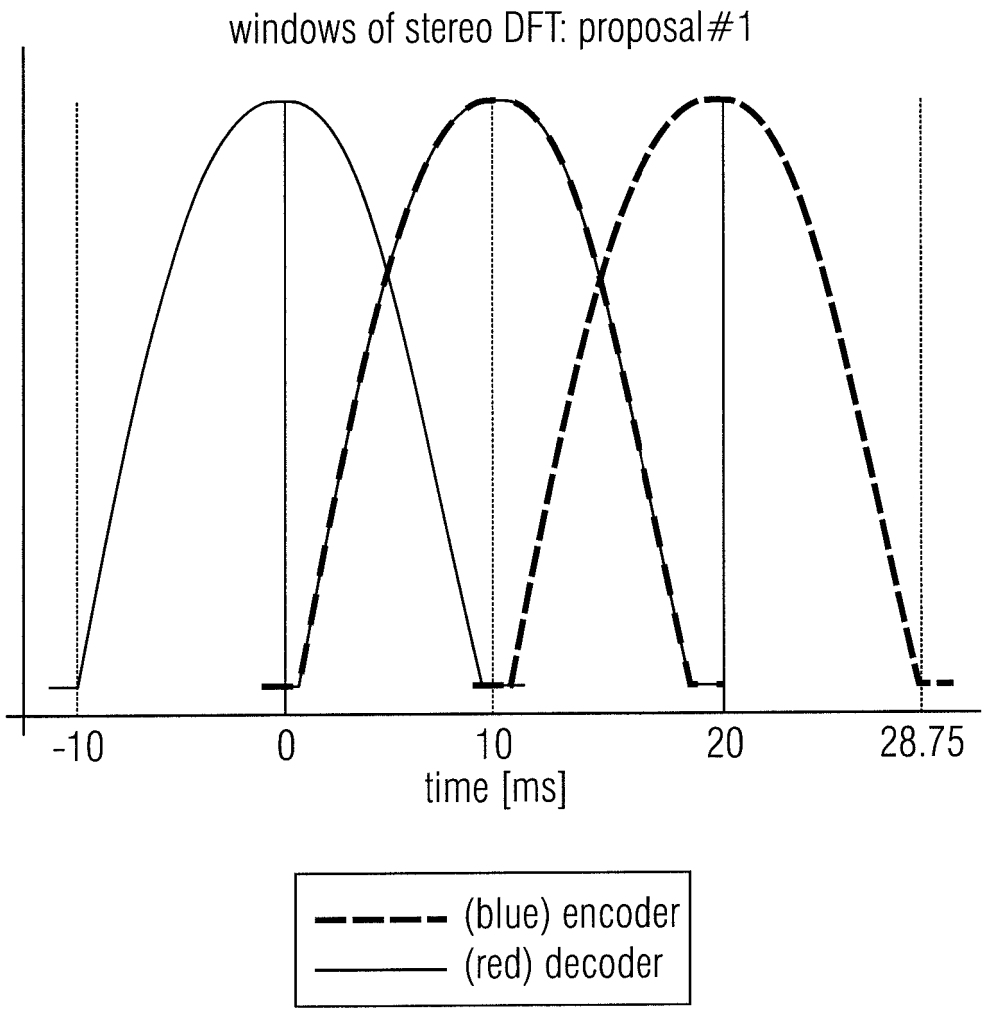

proposal 1 windows at encoder and decoder

Fig. 9c

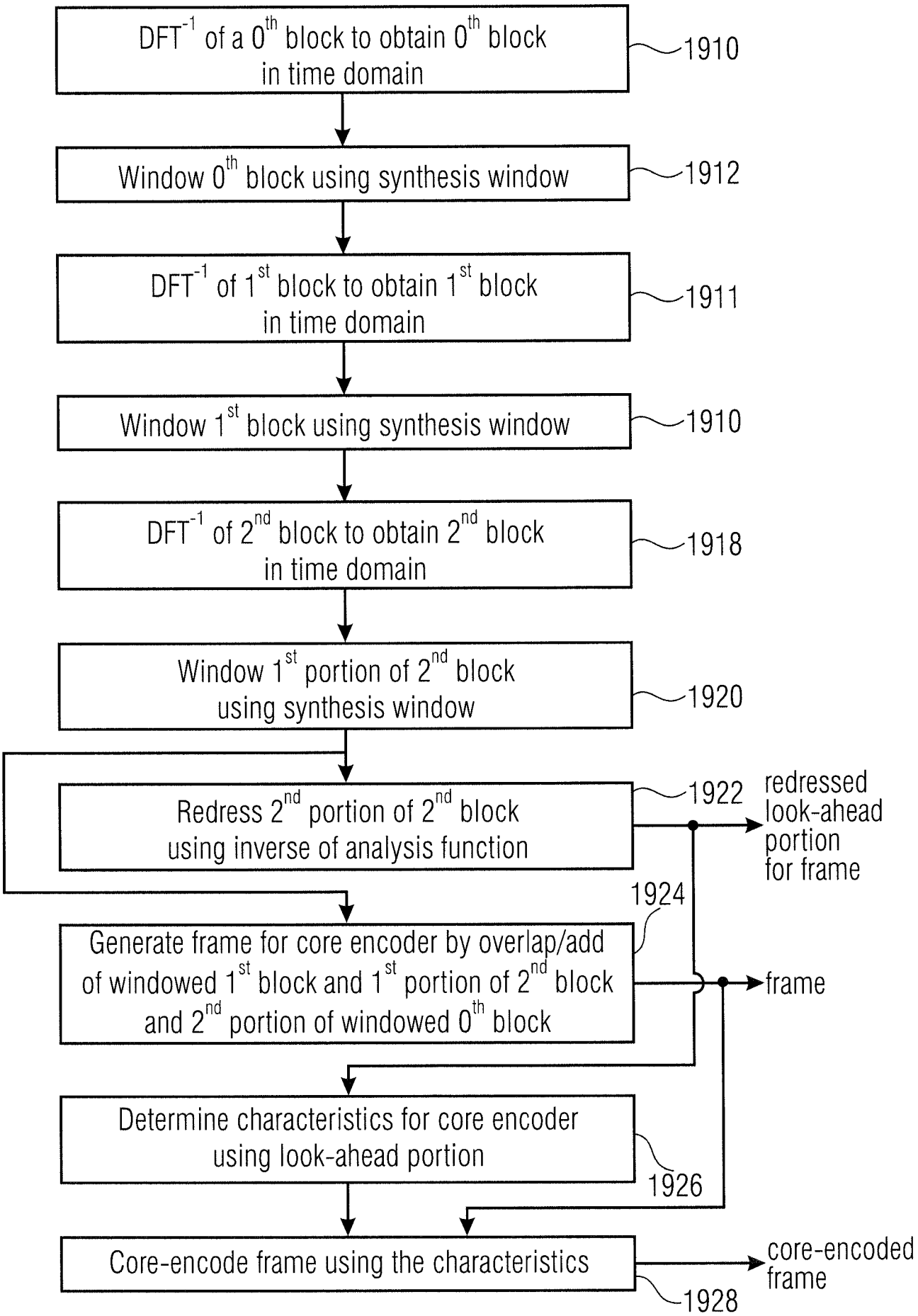
DFT-1 of a 0th block to obtain 0th block in time domain
1910
Window 0th block using synthesis window
1912
DFT-1 of 1st block to obtain 1st block in time domain
1911
Window 1st block using synthesis window
1910
DFT-1 of 2nd block to obtain 2nd block in time domain
1918
Window 1st portion of 2nd block using synthesis window
1920
Redress 2nd portion of 2nd block using inverse of analysis function
1922
redressed look-ahead portion for frame
1924
Generate frame for core encoder by overlap/add of windowed 1st block and 1st portion of 2nd block and 2nd portion of windowed 0th block
frame
Determine characteristics for core encoder using look-ahead portion
1926
Core-encode frame using the characteristics
core-encoded frame
1928

Fig. 9d

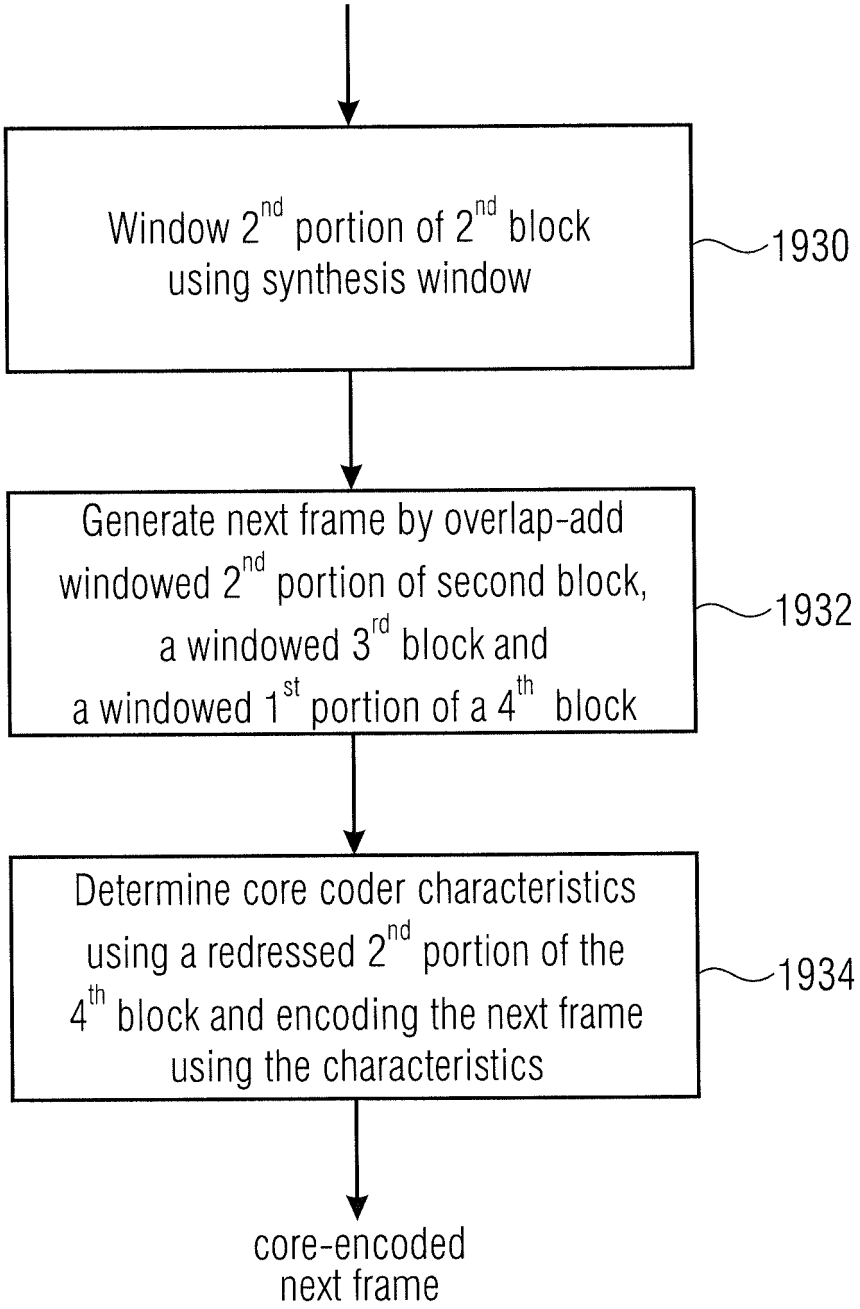
Window 2nd portion of 2nd block using synthesis window
1930
Generate next frame by overlap-add windowed 2nd portion of second block, a windowed 3rd block and a windowed 1st portion of a 4th block
1932
Determine core coder characteristics using a redressed 2nd portion of the 4th block and encoding the next frame using the characteristics
1934
core-encoded next frame

Fig. 9e

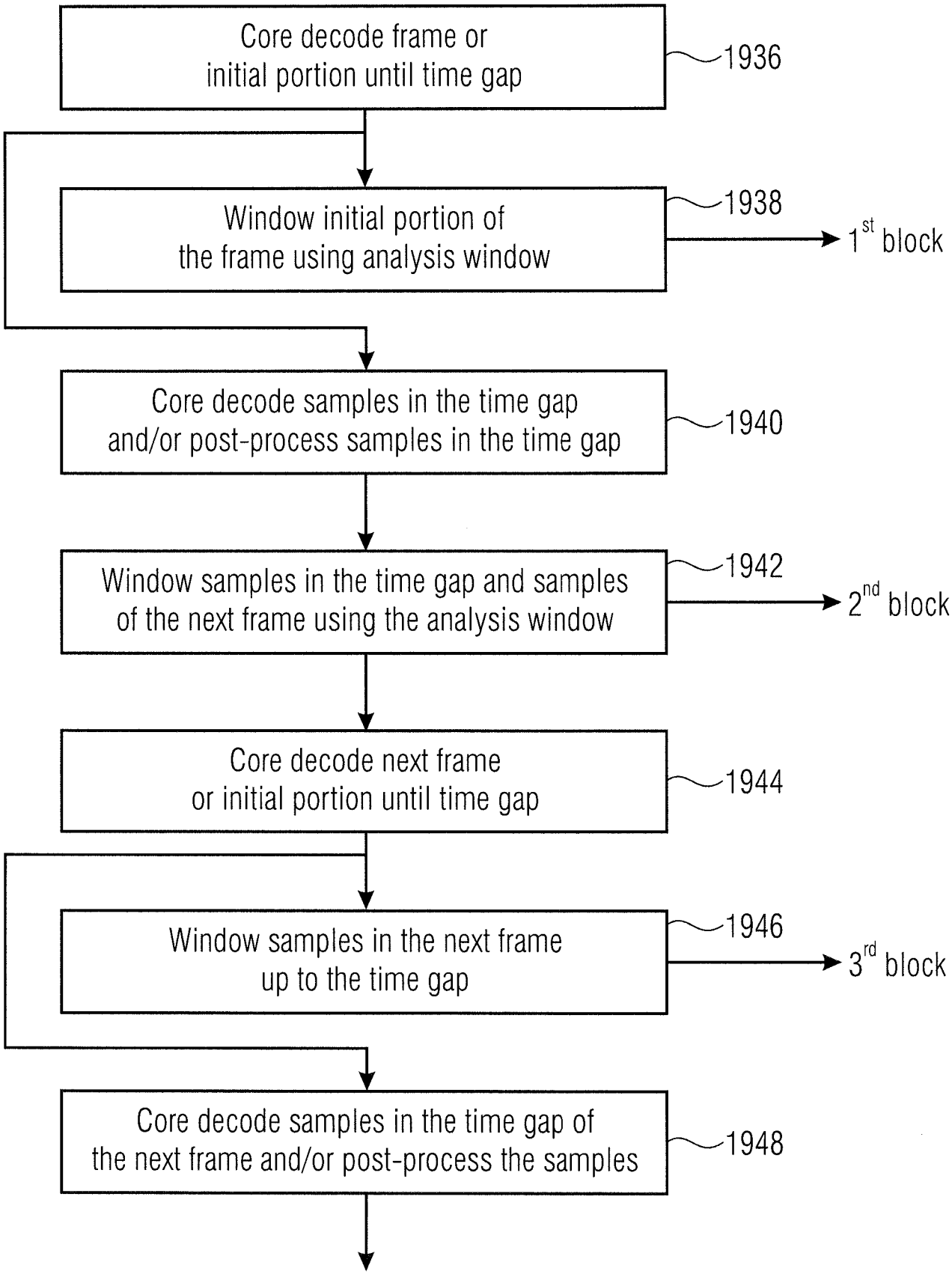
Core decode frame or initial portion until time gap
1936
Window initial portion of the frame using analysis window
1938
1st block
Core decode samples in the time gap and/or post-process samples in the time gap
1940
Window samples in the time gap and samples of the next frame using the analysis window
1942
2nd block
Core decode next frame or initial portion until time gap
1944
Window samples in the next frame up to the time gap
1946
3rd block
Core decode samples in the time gap of the next frame and/or post-process the samples
1948

Fig. 9f

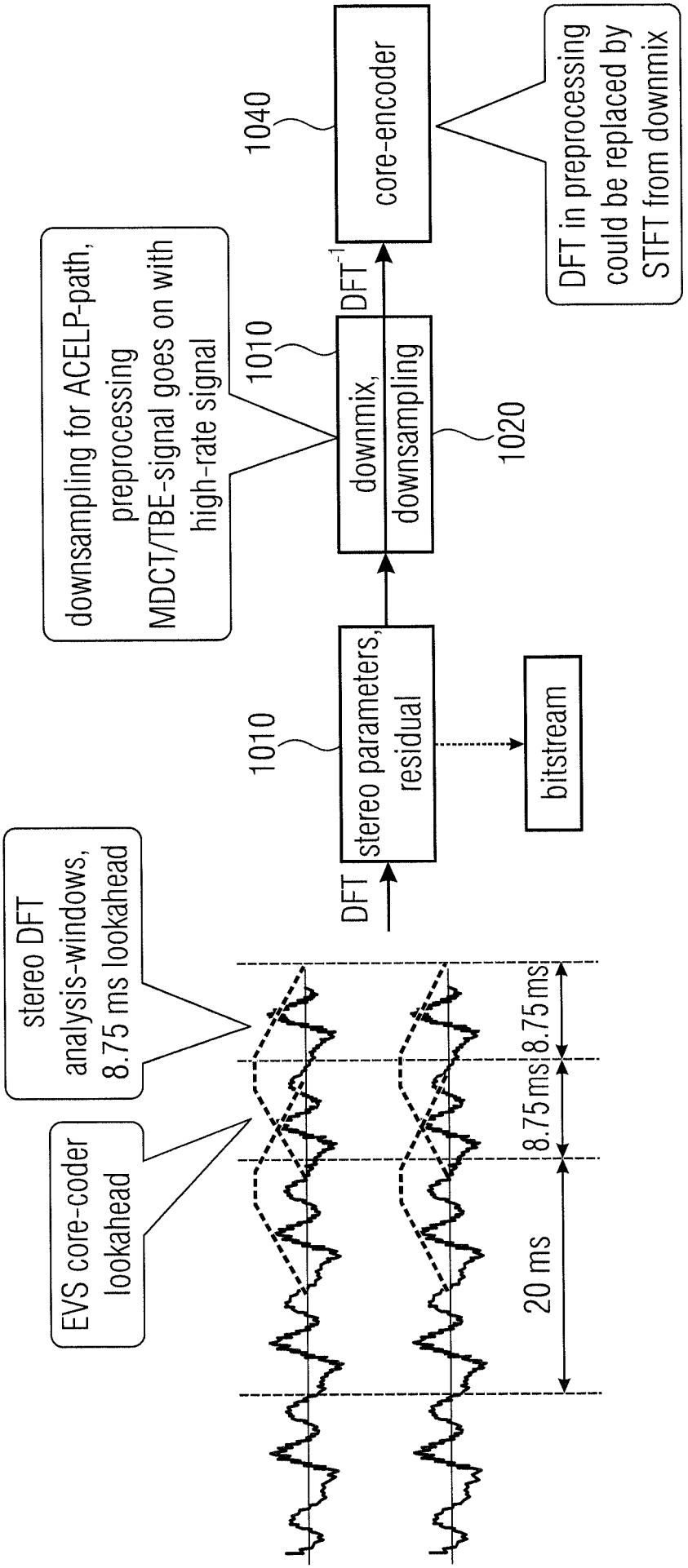

proposal 4 encoder schematic windowing

Fig. 10a

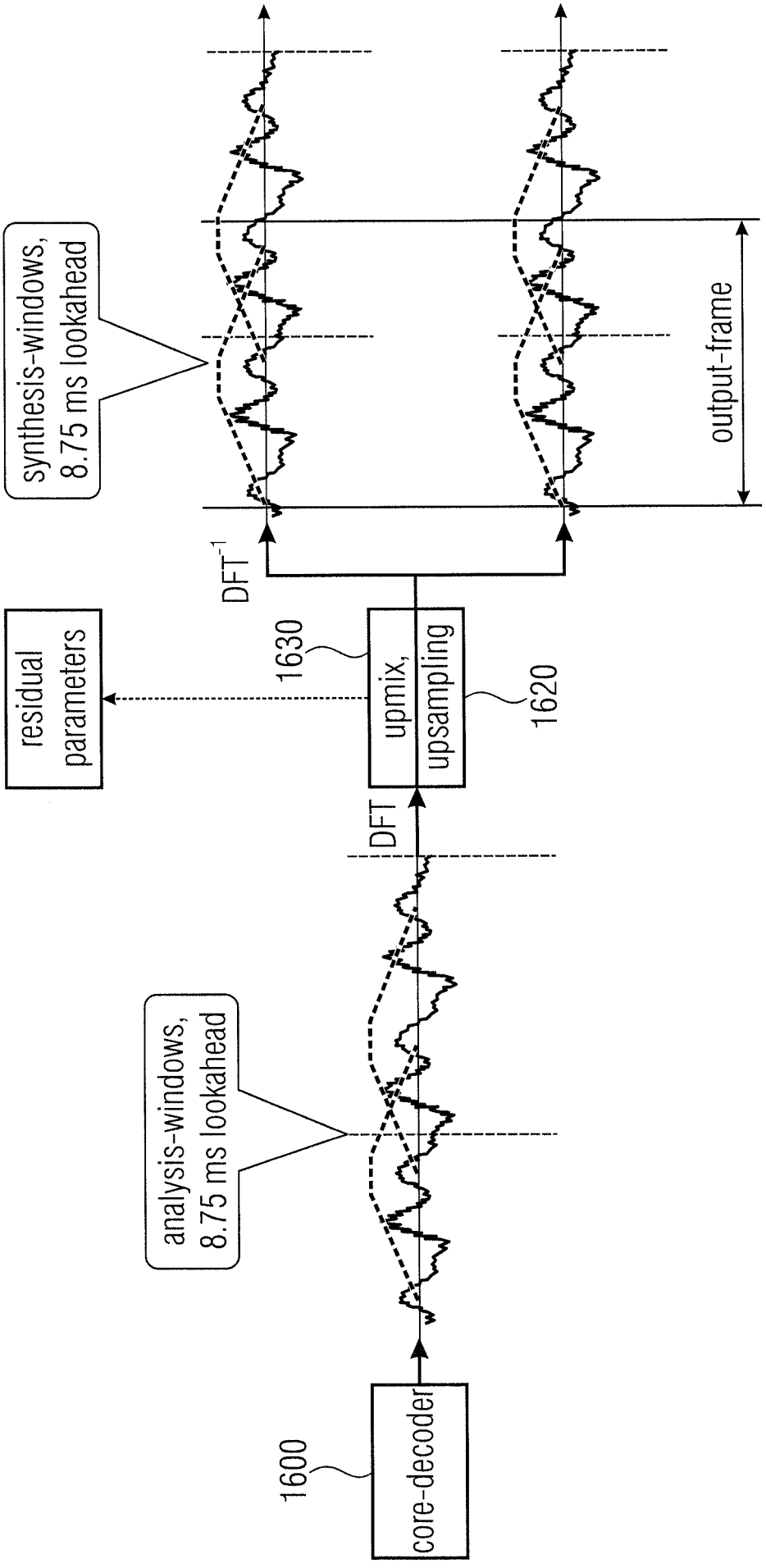

proposal 4 decoder schematic windowing

Fig. 10b

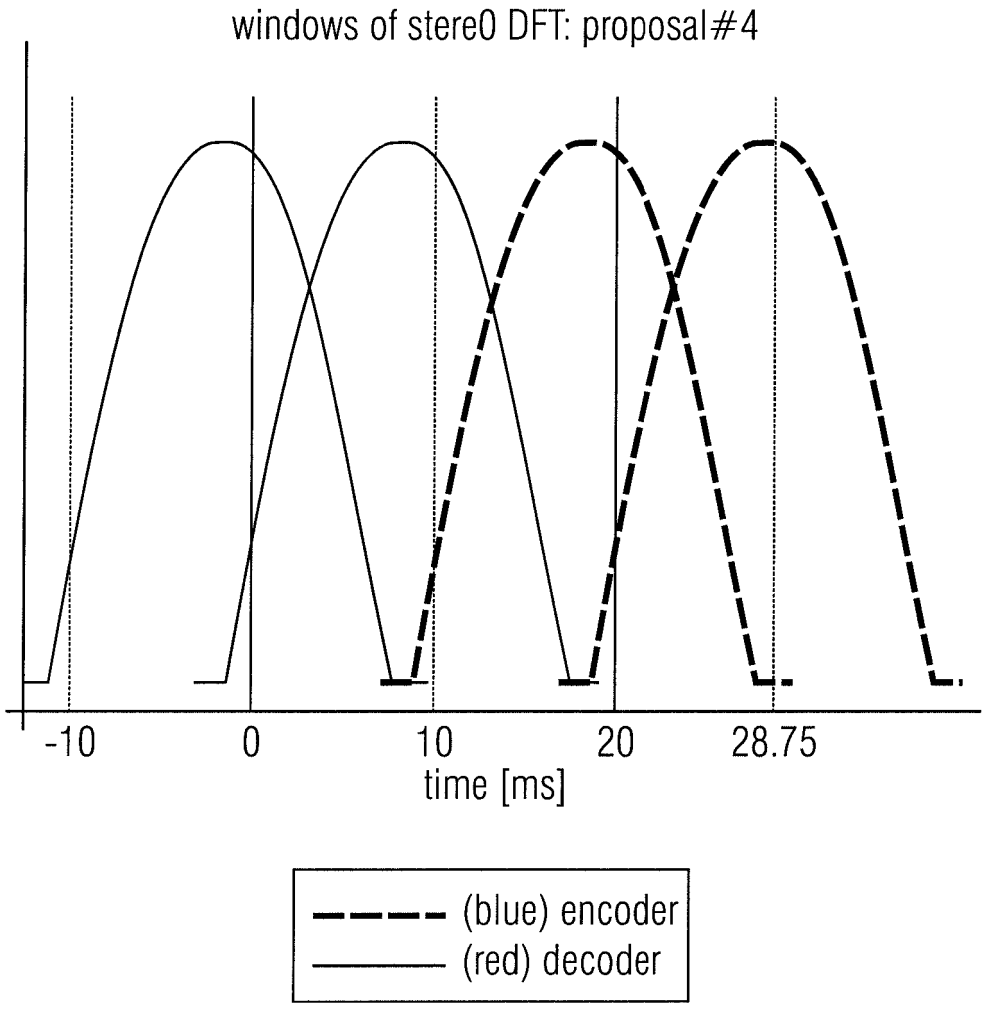

proposal 4 windows at encoder and decoder

Fig. 10c

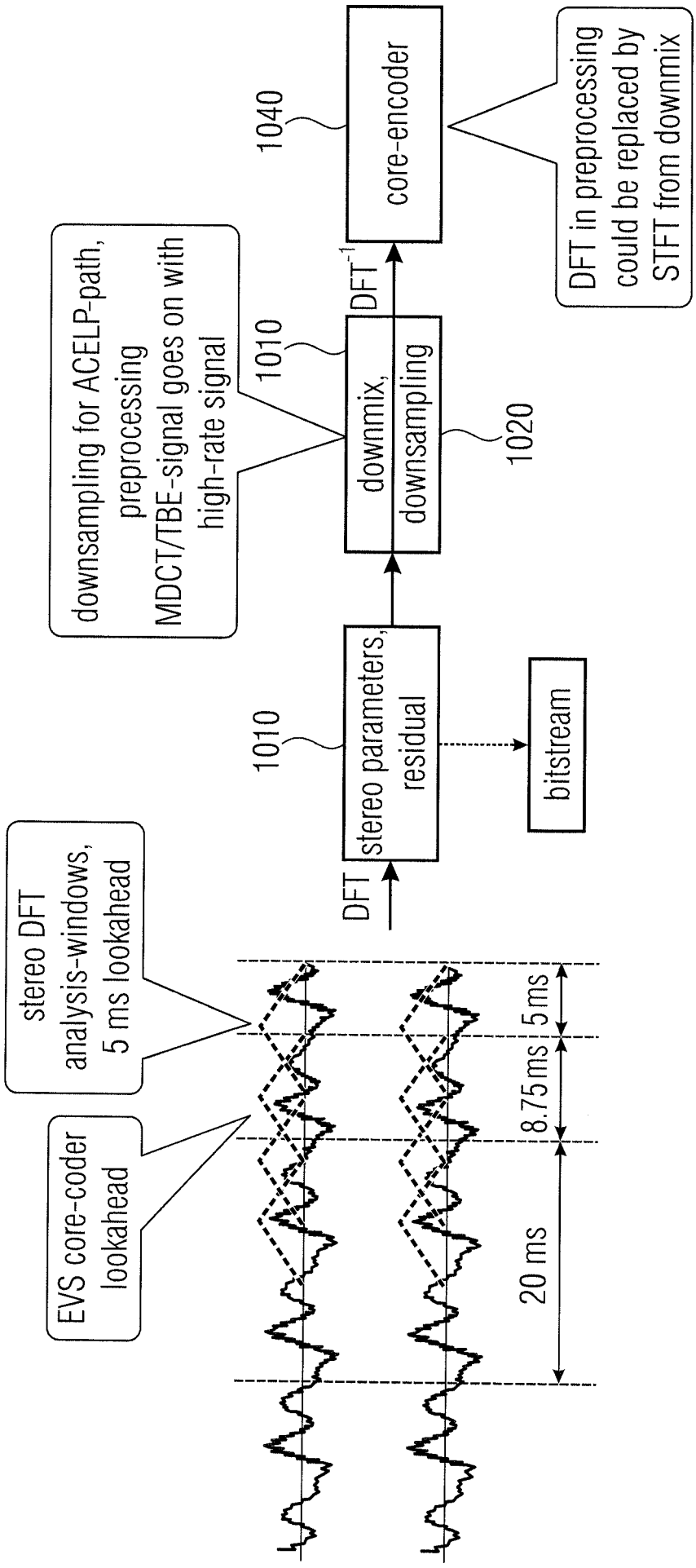

proposal 5 encoder schematic windowing

Fig. 11a

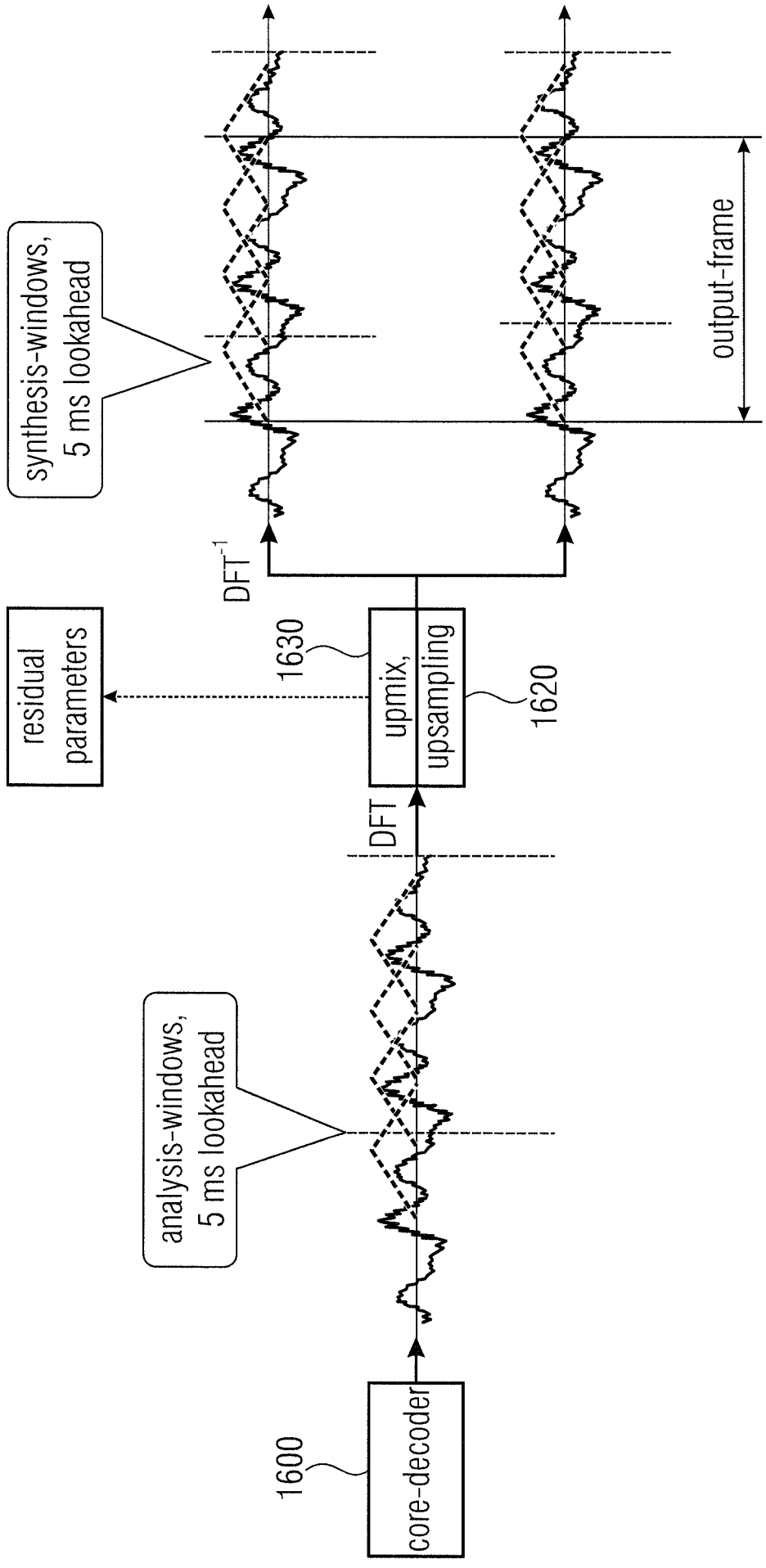

proposal 5 decoder schematic windowing

Fig. 11b

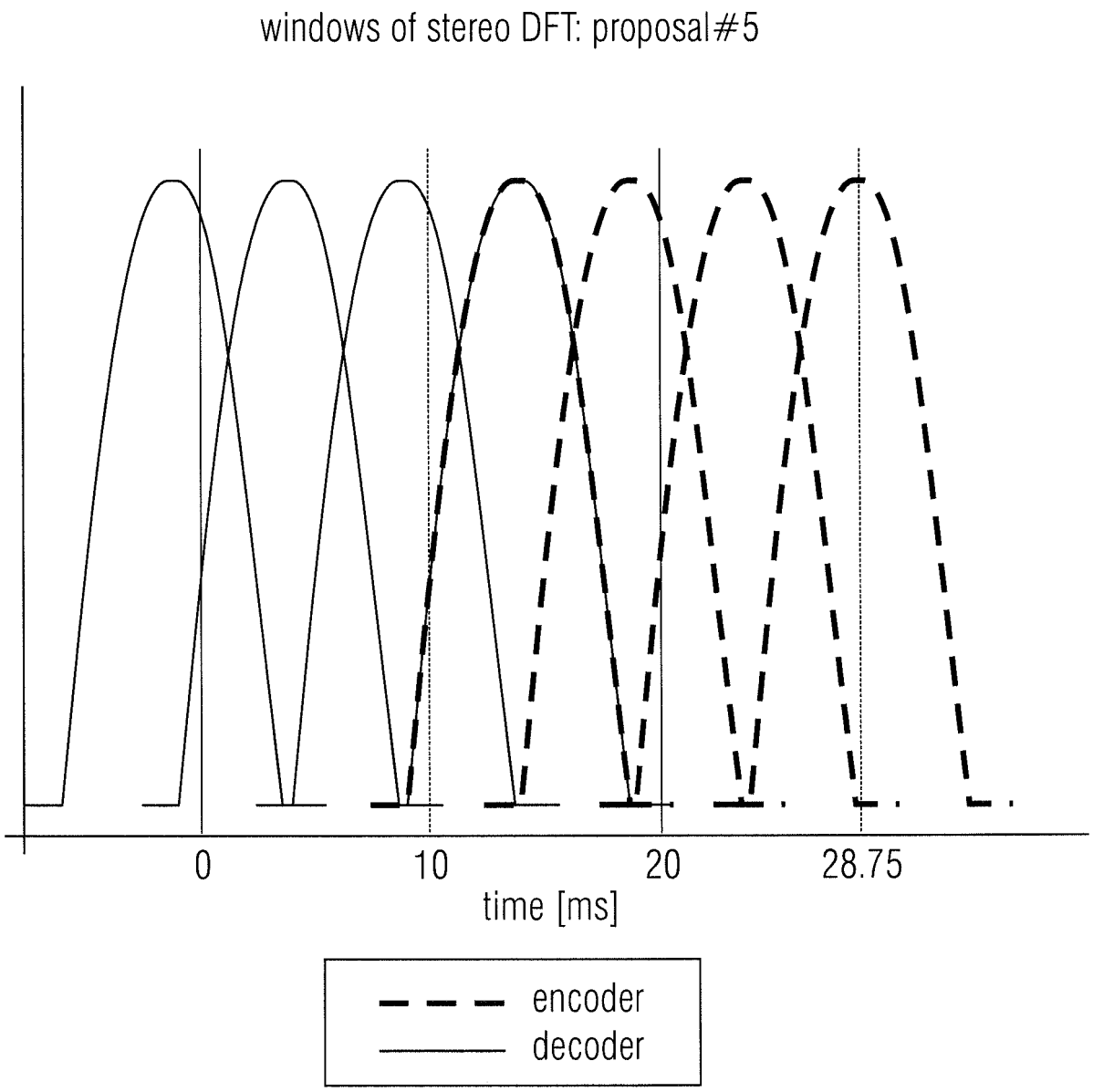

proposal 5 windows at encoder and decoder

Fig. 11c

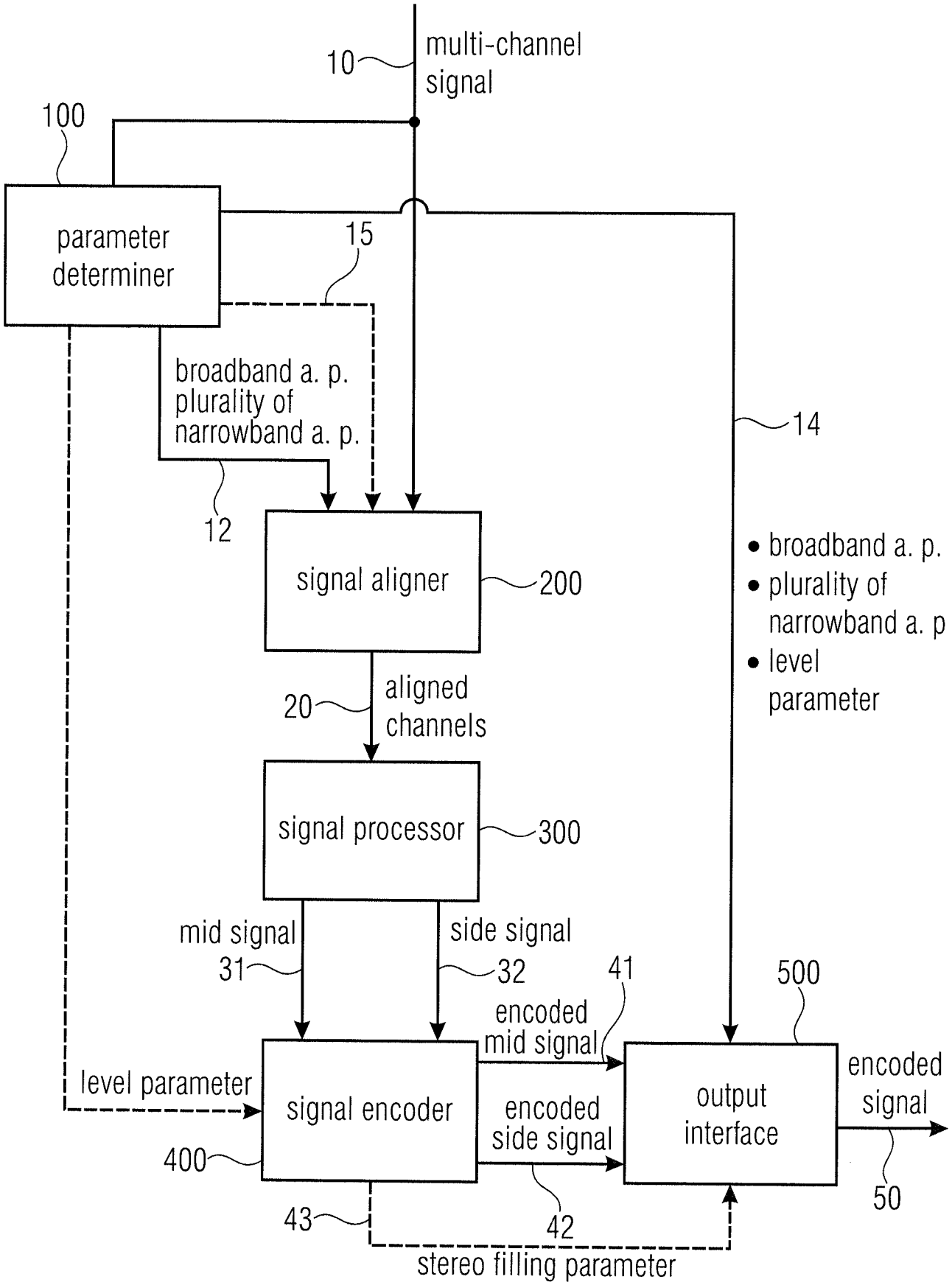
10
multi-channel signal
100
parameter determiner
15
broadband a. p. plurality of narrowband a. p.
12
14
signal aligner
200
• broadband a. p.
• plurality of narrowband a. p
• level parameter
20
aligned channels
signal processor
300
mid signal
31
side signal
32
41
encoded mid signal
500
level parameter
signal encoder
encoded side signal
output interface
encoded signal
400
50
43
42
stereo filling parameter

Fig. 12

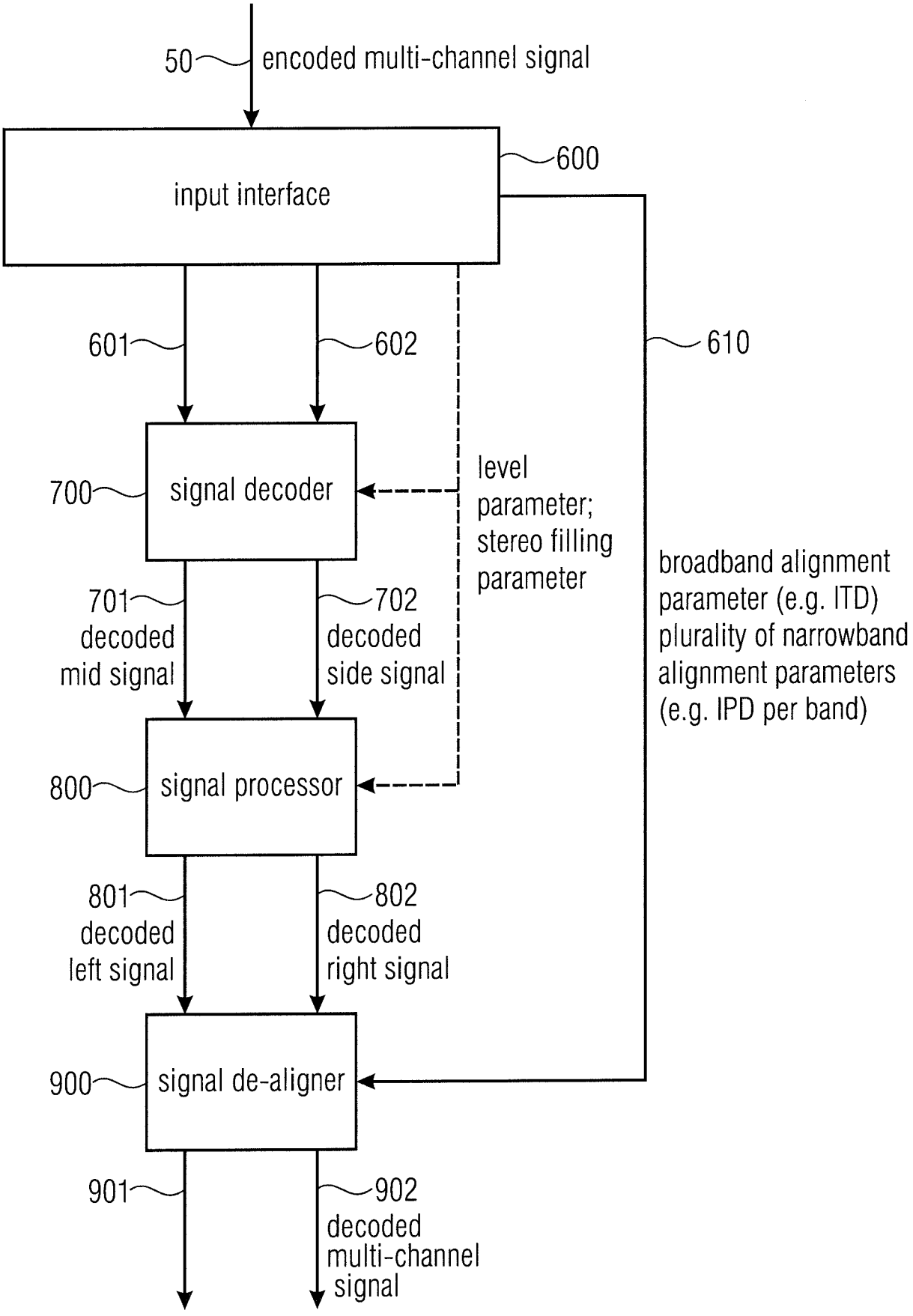
50
encoded multi-channel signal
input interface
600
601
602
610
700
signal decoder
level parameter; stereo filling parameter
broadband alignment parameter (e.g. ITD) plurality of narrowband alignment parameters (e.g. IPD per band)
701 decoded mid signal
702 decoded side signal
800
signal processor
801 decoded left signal
802 decoded right signal
900
signal de-aligner
901
902 decoded multi-channel signal

Fig. 13

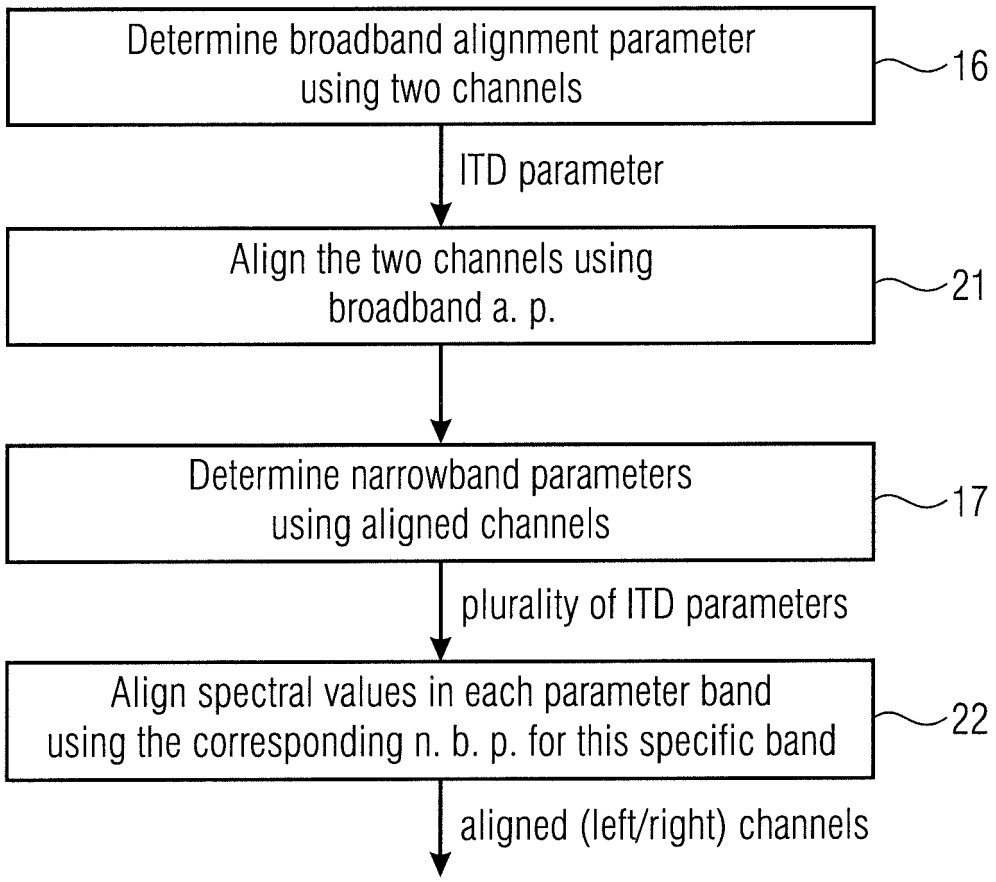

Fig. 14a

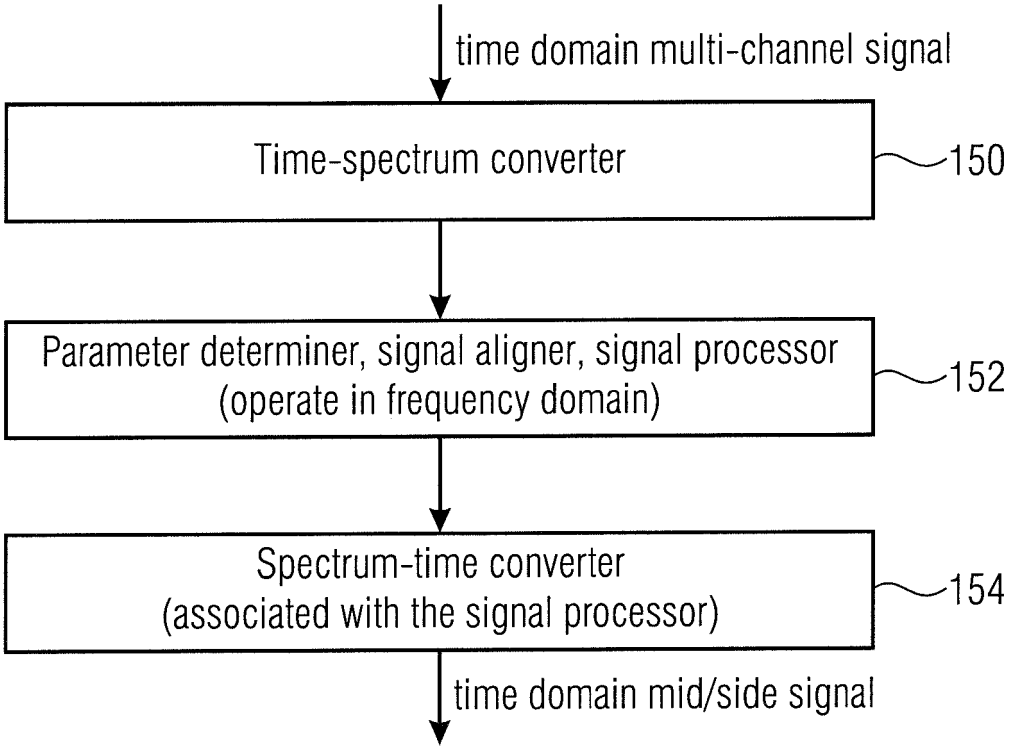

Fig. 14b

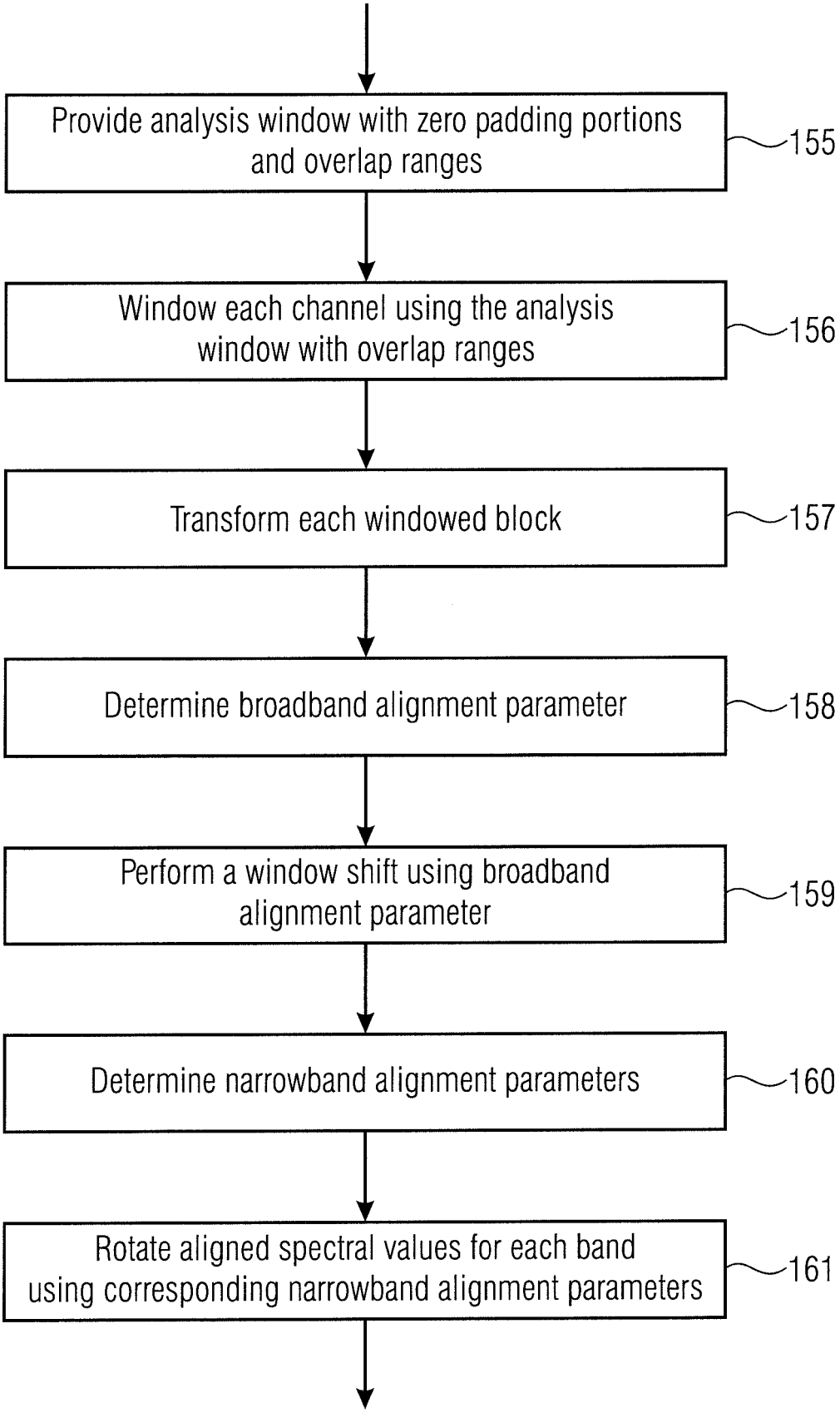
Provide analysis window with zero padding portions and overlap ranges
155
Window each channel using the analysis window with overlap ranges
156
Transform each windowed block
157
Determine broadband alignment parameter
158
Perform a window shift using broadband alignment parameter
159
Determine narrowband alignment parameters
160
Rotate aligned spectral values for each band using corresponding narrowband alignment parameters
161

Fig. 14c

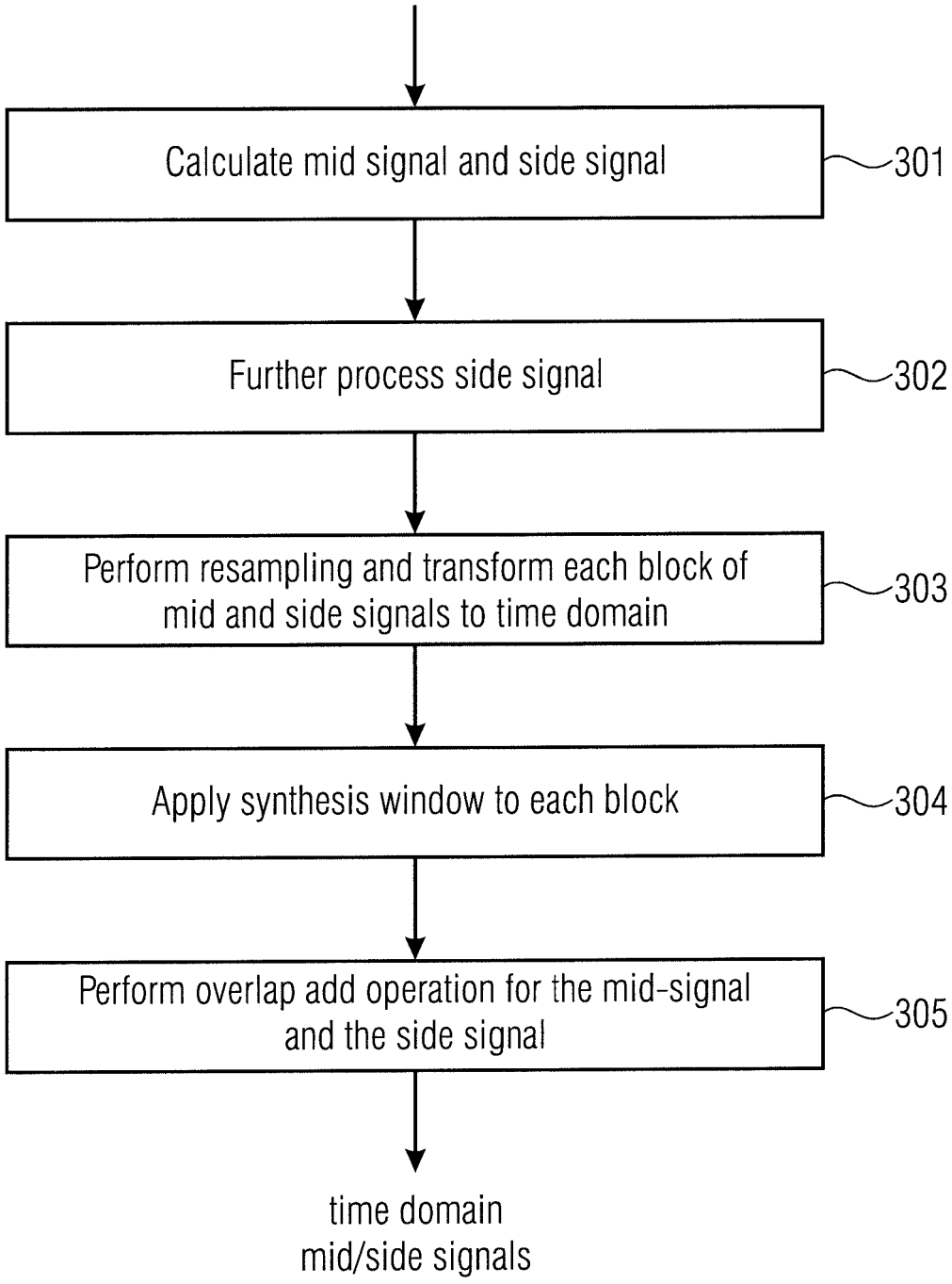
Calculate mid signal and side signal
301
Further process side signal
302
Perform resampling and transform each block of mid and side signals to time domain
303
Apply synthesis window to each block
304
Perform overlap add operation for the mid-signal and the side signal
305
time domain mid/side signals

Fig. 14d

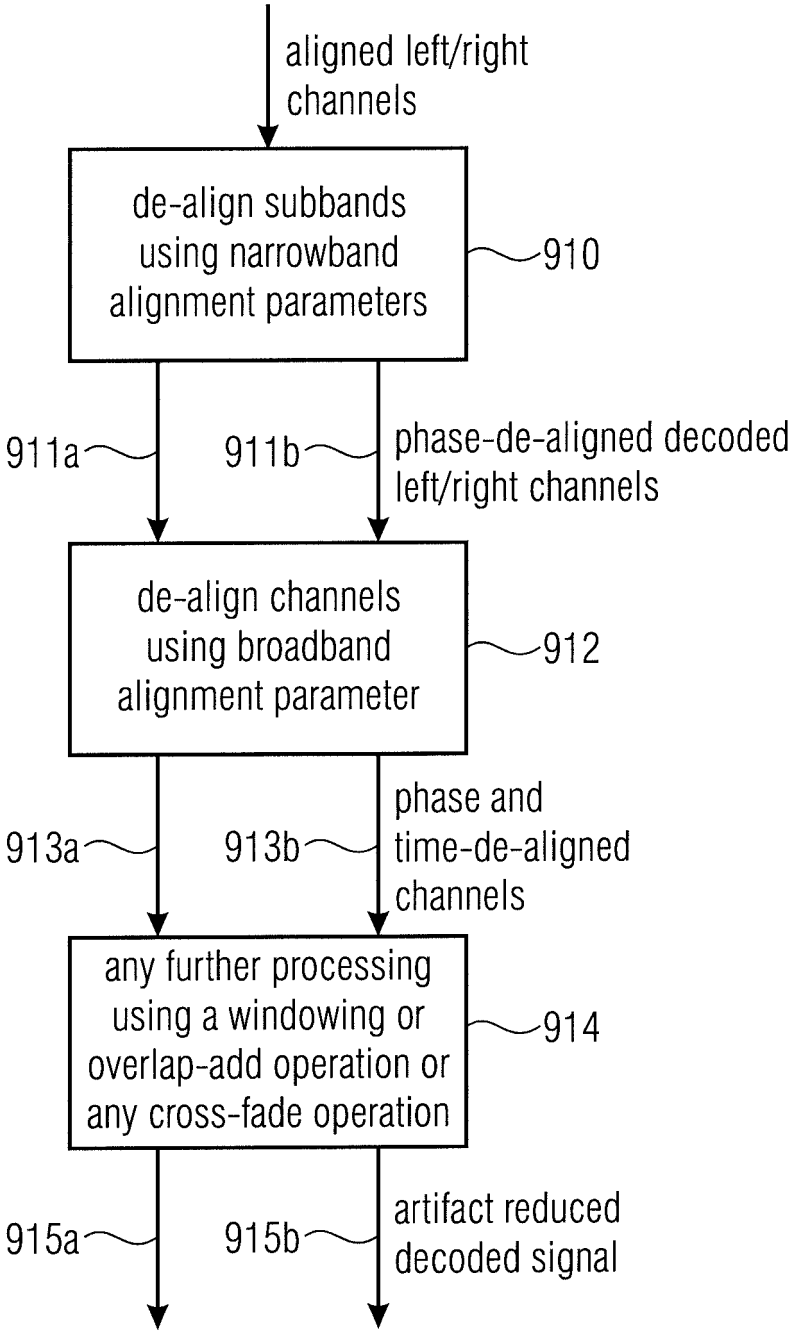
aligned left/right channels
de-align subbands using narrowband alignment parameters
910
911a
911b
phase-de-aligned decoded left/right channels
de-align channels using broadband alignment parameter
912
913a
913b
phase and time-de-aligned channels
any further processing using a windowing or overlap-add operation or any cross-fade operation
914
915a
915b
artifact reduced decoded signal

Fig. 15a

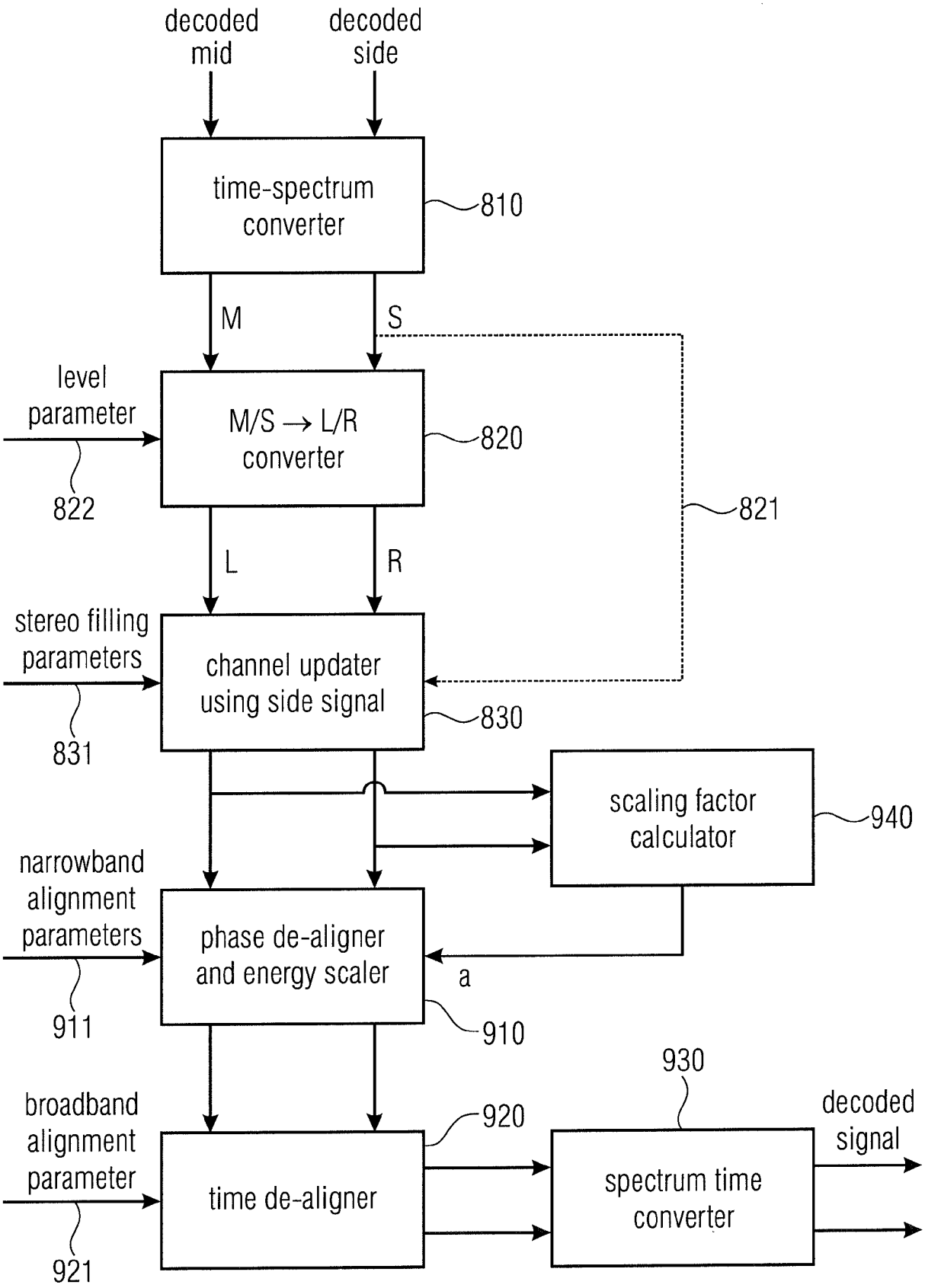
decoded mid
decoded side
time-spectrum converter
810
M
S
level parameter
M/S → L/R converter
820
822
821
L
R
stereo filling parameters
channel updater using side signal
830
831
scaling factor calculator
940
narrowband alignment parameters
phase de-aligner and energy scaler
a
911
910
930
broadband alignment parameter
920
time de-aligner
spectrum time converter
decoded signal
921

Fig. 15b

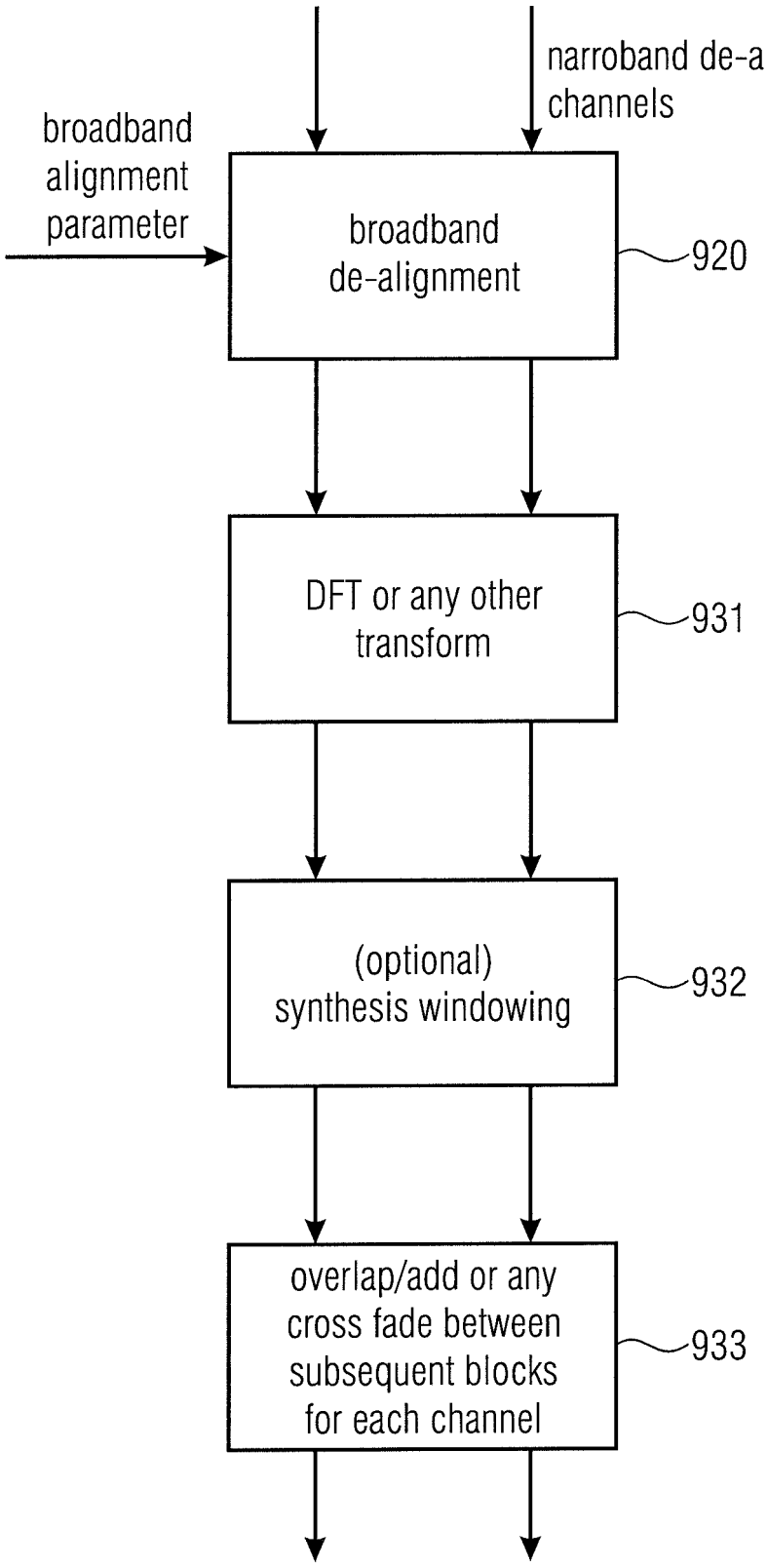
narroband de-aligned channels
broadband alignment parameter
broadband de-alignment
920
DFT or any other transform
931
(optional) synthesis windowing
932
overlap/add or any cross fade between subsequent blocks for each channel
933

Fig. 15c