FIG. 9

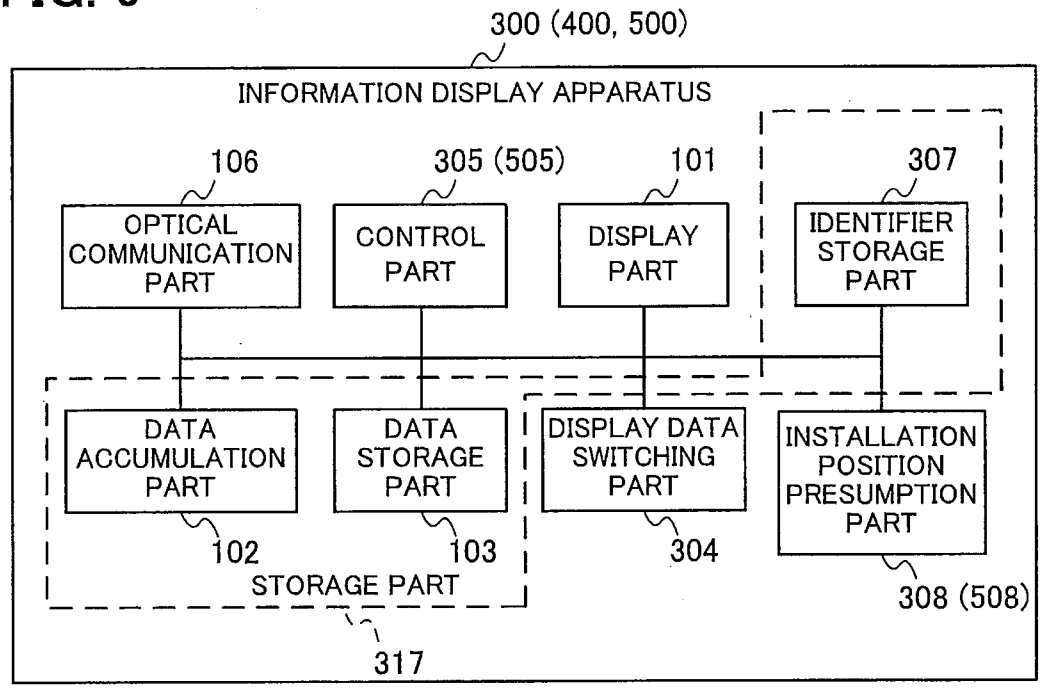
300 (400, 500)
INFORMATION DISPLAY APPARATUS
106
OPTICAL COMMUNICATION PART
305 (505)
CONTROL PART
101
DISPLAY PART
307
IDENTIFIER STORAGE PART
DATA ACCUMULATION PART
102
DATA STORAGE PART
103
DISPLAY DATA SWITCHING PART
304
INSTALLATION POSITION PRESUMPTION PART
308 (508)
STORAGE PART
317

FIG. 10

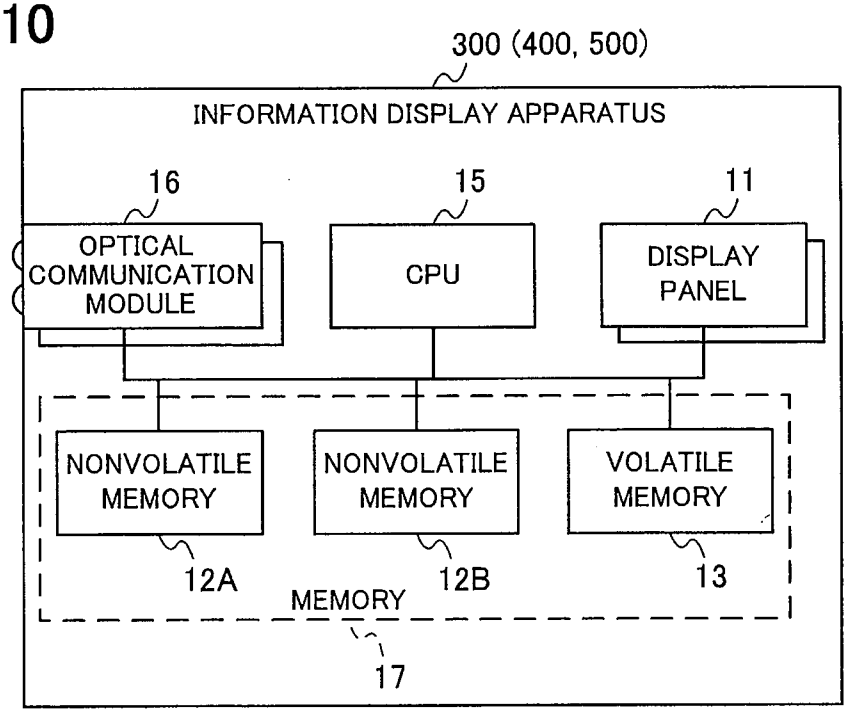
300 (400, 500)
INFORMATION DISPLAY APPARATUS
16
OPTICAL COMMUNICATION MODULE
15
CPU
11
DISPLAY PANEL
NONVOLATILE MEMORY
12A
NONVOLATILE MEMORY
12B
VOLATILE MEMORY
13
MEMORY
17