(12) INTERNATIONAL APPLICATION PUBLISHED UNDER THE PATENT COOPERATION TREATY (PCT)

(19) World Intellectual Property Organization
International Bureau

(43) International Publication Date
14 January 2010 (14.01.2010)

PCT

(10) International Publication Number
WO 2010/003761 A1

(51) International Patent Classification:
B63B 23/58 (2006.01)

(21) International Application Number:
PCT/EP2009/057367

(22) International Filing Date:
15 June 2009 (15.06.2009)

(25) Filing Language: English

(26) Publication Language: English

(30) Priority Data:
PA 2008 00829 16 June 2008 (16.06.2008) DK
61/061,930 16 June 2008 (16.06.2008) US
PA 2009 00206 13 February 2009 (13.02.2009) DK

(71) Applicant *(for all designated States except US)*: **NADIRO A/S** [DK/DK]; Esplanaden 50, DK-1263 Copenhagen K (DK).

(72) Inventor; and
(75) Inventor/Applicant *(for US only)*: **NIELSEN, Bent** [DK/DK]; Nordtoftevej 6, DK-2605 Brøndby (DK).

(74) Agent: **SUNDIEN, Thomas**; Zacco Denmark A/S, Hans Bekkevolds Allé 7, DK-2900 Hellerup (DK).

(81) Designated States *(unless otherwise indicated, for every kind of national protection available)*: AE, AG, AL, AM, AO, AT, AU, AZ, BA, BB, BG, BH, BR, BW, BY, BZ, CA, CH, CL, CN, CO, CR, CU, CZ, DE, DK, DM, DO, DZ, EC, EE, EG, ES, FI, GB, GD, GE, GH, GM, GT, HN, HR, HU, ID, IL, IN, IS, JP, KE, KG, KM, KN, KP, KR, KZ, LA, LC, LK, LR, LS, LT, LU, LY, MA, MD, ME, MG, MK, MN, MW, MX, MY, MZ, NA, NG, NI, NO, NZ, OM, PE, PG, PH, PL, PT, RO, RS, RU, SC, SD, SE, SG, SK, SL, SM, ST, SV, SY, TJ, TM, TN, TR, TT, TZ, UA, UG, US, UZ, VC, VN, ZA, ZM, ZW.

(84) Designated States *(unless otherwise indicated, for every kind of regional protection available)*: ARIPO (BW, GH, GM, KE, LS, MW, MZ, NA, SD, SL, SZ, TZ, UG, ZM, ZW), Eurasian (AM, AZ, BY, KG, KZ, MD, RU, TJ, TM), European (AT, BE, BG, CH, CY, CZ, DE, DK, EE, ES, FI, FR, GB, GR, HR, HU, IE, IS, IT, LT, LU, LV, MC, MK, MT, NL, NO, PL, PT, RO, SE, SI, SK, TR), OAPI (BF, BJ, CF, CG, CI, CM, GA, GN, GQ, GW, ML, MR, NE, SN, TD, TG).

Published:

— *with international search report (Art. 21(3))*

WO 2010/003761 A1

(54) **Title**: A COUPLING

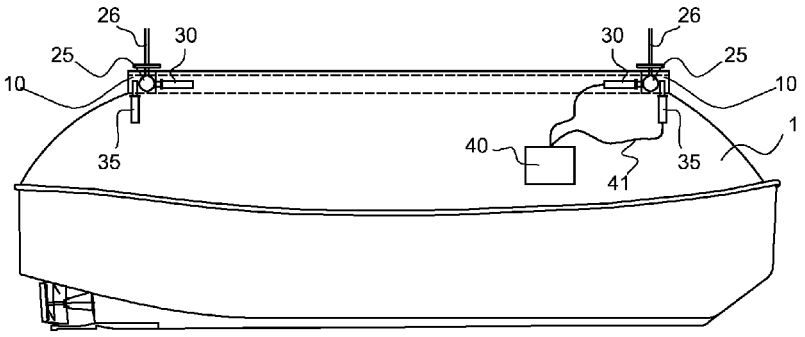

Figure 1

(57) **Abstract**: A coupling for coupling a fall (26) to a lifeboat (1) comprising locking portions and a receiving portion constituting a hollow (10) having a open end and an upwardly facing aperture (15). The locking portion (25), hollow (10) and aperture (15) having a form preventing the locking portion (25) from passing through the aperture (15). The coupling further comprises actuators (30, 35, 39) controlled by a controller (40). A string (27) may be provided for easy retrieval of the locking portions upon the retrieval of the lifeboat (1).