(12) INTERNATIONAL APPLICATION PUBLISHED UNDER THE PATENT COOPERATION TREATY (PCT)

(19) World Intellectual Property Organization
International Bureau

(43) International Publication Date
8 March 2012 (08.03.2012)

PCT

(10) International Publication Number
WO 2012/029072 A1

(51) International Patent Classification:
B07B 1/46 (2006.01)

(21) International Application Number:
PCT/IN2011/000167

(22) International Filing Date:
11 March 2011 (11.03.2011)

(25) Filing Language: English

(26) Publication Language: English

(30) Priority Data:
981/KOL/2010 1 September 2010 (01.09.2010) IN

(71) Applicant *(for all designated States except US)*: **TEGA INDUSTRIES LIMITED** [IN/IN]; 147, Block G, New Alipore, Kolkata 700 053, West Bengal (IN).

(72) Inventor; and

(75) Inventor/Applicant *(for US only)*: **MOHANKA, Madan Mohan** [IN/IN]; 147, Block G, New Alipore, Kolkata 700 053, West Bengal (IN).

(74) Agent: **S.S. DATTA & ASSOCIATES**; 288/1, B.B. Chatterjee Road, Ground Floor, Kolkata 700 042, West Bengal (IN).

(81) Designated States *(unless otherwise indicated, for every kind of national protection available)*: AE, AG, AL, AM, AO, AT, AU, AZ, BA, BB, BG, BH, BR, BW, BY, BZ, CA, CH, CL, CN, CO, CR, CU, CZ, DE, DK, DM, DO, DZ, EC, EE, EG, ES, FI, GB, GD, GE, GH, GM, GT, HN, HR, HU, ID, IL, IN, IS, JP, KE, KG, KM, KN, KP, KR, KZ, LA, LC, LK, LR, LS, LT, LU, LY, MA, MD, ME, MG, MK, MN, MW, MX, MY, MZ, NA, NG, NI, NO, NZ, OM, PE, PG, PH, PL, PT, RO, RS, RU, SC, SD, SE, SG, SK, SL, SM, ST, SV, SY, TH, TJ, TM, TN, TR, TT, TZ, UA, UG, US, UZ, VC, VN, ZA, ZM, ZW.

(84) Designated States *(unless otherwise indicated, for every kind of regional protection available)*: ARIPO (BW, GH, GM, KE, LR, LS, MW, MZ, NA, SD, SL, SZ, TZ, UG, ZM, ZW), Eurasian (AM, AZ, BY, KG, KZ, MD, RU, TJ, TM), European (AL, AT, BE, BG, CH, CY, CZ, DE, DK, EE, ES, FI, FR, GB, GR, HR, HU, IE, IS, IT, LT, LU, LV, MC, MK, MT, NL, NO, PL, PT, RO, RS, SE, SI, SK, SM, TR), OAPI (BF, BJ, CF, CG, CI, CM, GA, GN, GQ, GW, ML, MR, NE, SN, TD, TG).

Published:

— *with international search report (Art. 21(3))*

(54) Title: SCREEN PANEL WITH IMPROVED APERTURES

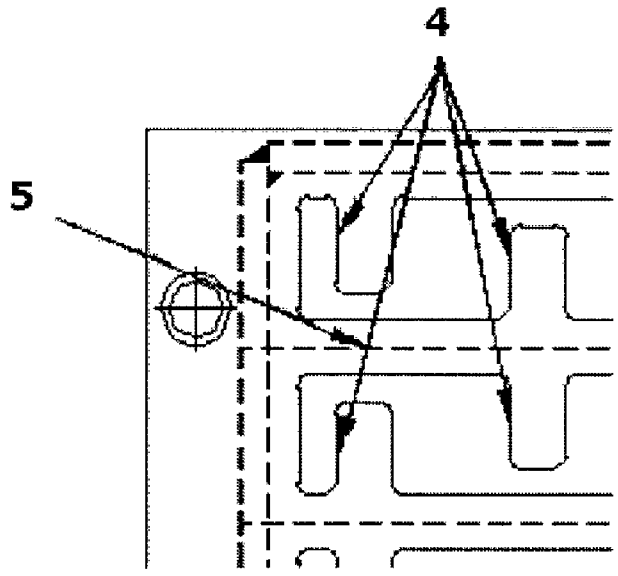

Fig 4

(57) Abstract: A screen panel with improved apertures for mining and quarrying industries adapted to be mounted on a screen deck, including a screening surface made up of materials such as herein described formed on a reinforcing frame, said screen panel having suitably designed apertures for allowing materials to pass through, said apertures having resilient ribs (5) with protrusions (4) on both sides configured with respect to each other such that adequate open space exists, whereby clogging of materials pursuant to screening operations are substantially reduced.

WO 2012/029072 A1